Differential Difference Amplifier(DDA) based Instrumentation Amplifier(IA) using 180nm CMOS Technology with High Gain and Balanced CMRR

Gourab Ghose, Swaraj Malakar, Rishika Pasi, Mr. Banoth Krishna
Department of Electronics and Communication Engineering
Assam University, Silchar, India
Emails: gourabghosecode@gmail.com, swaraj.malakar05@gmail.com, rishika.pasi16@gmail.com, krish552011@gmail.com

Abstract - Instrumentation amplifiers are widely used in biomedical and sensor-based applications for the accurate amplification of very low-level differential signals in the presence of noise and common-mode interference. Conventional three-op-amp instrumentation amplifier architectures often suffer from increased circuit complexity, higher power consumption, and limited common-mode rejection when scaled to advanced CMOS technologies. To overcome these limitations, this project presents the design and analysis of a Differential Difference Amplifier (DDA) based Instrumentation Amplifier implemented using CMOS technology. The DDA architecture employs two differential input pairs, enabling direct subtraction of differential signals while providing high input impedance and superior common-mode noise rejection. The proposed instrumentation amplifier utilizes the DDA as the core gain stage with externally controllable gain and incorporates a Common-Mode Feedback (CMFB) circuit to stabilize the output common-mode voltage and ensure proper operation. The design methodology includes theoretical analysis, transistor sizing, and biasing considerations suitable for low-power and low-voltage applications. The complete DDA-based instrumentation amplifier and CMFB circuit are designed and simulated using the Cadence Virtuoso environment. Key performance parameters such as gain, stability, and common-mode rejection are analyzed through simulation results. The proposed architecture demonstrates improved noise immunity, compact structure, and suitability for precision signal conditioning applications. This work highlights the effectiveness of DDA-based instrumentation amplifiers for biomedical and sensor interface systems and provides a foundation for further optimization in terms of power consumption, layout implementation, and advanced CMOS scaling.

Keywords: Instrumentation Amplifier(IA), Differential Difference Amplifier(DDA), Common-Mode Feedback (CMFB), CMOS Technology, High Gain, Low Power, Biomedical Signal Processing

1.1 INTRODUCTION:

Instrumentation amplifiers (INAs) are fundamental analog front-end circuits designed for the precise amplification of low-amplitude differential signals in the presence of substantial common-mode interference. [12] They are extensively employed in biomedical signal

acquisition systems, sensor interface circuits, and precision measurement applications, where the signal levels are often in the microvolt range and highly vulnerable to environmental noise. In such systems, the amplifier must provide high input impedance to avoid loading the signal source, high common-mode rejection to suppress interference, low input-referred noise to preserve signal integrity, and stable gain performance under low-voltage operation.

With the continuous scaling of CMOS technology, achieving high intrinsic gain has become increasingly challenging due to reduced device output resistance. At the same time, modern electronic systems demand low-power and compact implementations suitable for portable and integrated platforms. These constraints motivate the exploration of alternative instrumentation amplifier architectures capable of delivering high performance while maintaining low power dissipation and reduced circuit complexity.

1.1.1 Conventional DDA-Based Closed-Loop Configuration:

The Differential Difference Amplifier (DDA) has emerged as a promising alternative architecture for the implementation of instrumentation amplifiers due to its inherent capability of processing multiple differential input pairs simultaneously. Unlike conventional operational amplifiers, a DDA directly amplifies the difference between two differential input voltages, thereby enabling efficient extraction of desired signals in the presence of common-mode interference. This characteristic makes the DDA particularly attractive for precision low-level signal amplification applications.[5]

A conventional closed-loop DDA-based instrumentation amplifier configuration is illustrated in Figure 1. In this structure, the closed-loop gain is primarily determined by the feedback network composed of resistors R_1 and R_2. The resistor ratio defines the amplification factor, while capacitor C_1 is introduced to provide AC coupling and establish the low-frequency cutoff of the system. This configuration allows amplification of small differential signals while suppressing DC offsets that may arise from sensor interfaces or electrode-skin potentials in biomedical systems.

However, for applications requiring very low cutoff frequencies, particularly in biomedical signal acquisition where frequencies may extend down to a few hertz, the value of R_1 must be extremely large. Implementing such large resistance values on-chip presents practical challenges. High-value resistors contribute increased thermal noise, degrade overall noise performance, and consume considerable silicon area when realized using conventional integrated resistor structures. Furthermore, the presence of large passive components may limit integration density and increase process variation sensitivity.

As a result, although the conventional closed-loop DDA configuration provides a straightforward method for gain control and AC coupling, it introduces design trade-offs between low-frequency response, noise performance, and area efficiency. These limitations motivate the need for improved architectural strategies that maintain the advantages of DDA-based amplification while addressing the constraints associated with large feedback components.

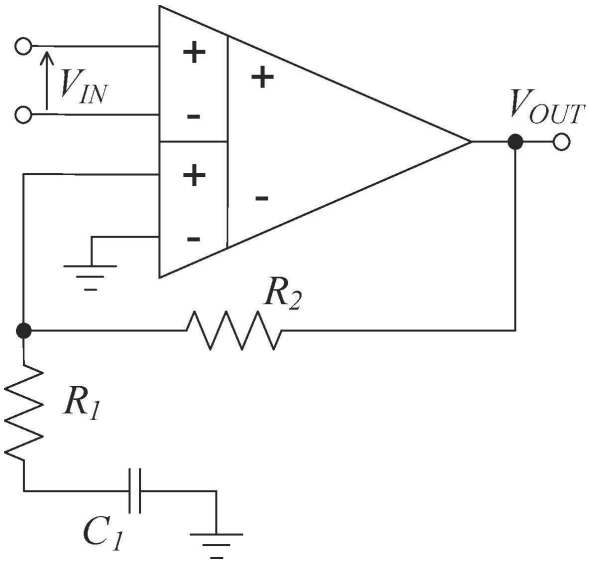

Fig 1.1: illustrates Conventional Closed-Loop DDA-Based Instrumentation Amplifier[5]

1.1.2 Proposed Modified Closed-Loop Architecture:

To address the limitations associated with large feedback resistors in the conventional configuration, a modified closed-loop architecture is adopted in this work, as illustrated in Figure 1.2. The primary objective of this modification is to decouple the AC coupling mechanism from the main feedback network, thereby improving noise performance while maintaining low-frequency operation.

In the proposed structure, the AC coupling is implemented using capacitors C_1 and C_2, while the required high resistance values are realized using MOS pseudo-resistors. Unlike conventional poly or diffusion resistors, MOS pseudo-resistors can achieve extremely large effective resistance values within a very small silicon area. [14] This makes them highly suitable for integrated low-frequency biomedical applications where cutoff frequencies in the order of a few hertz are required.

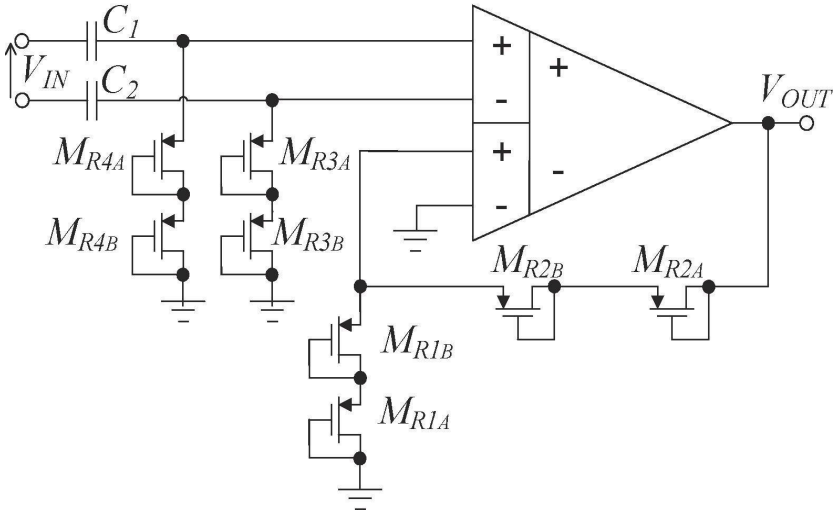

Fig1.2: signifies Proposed Modified Closed-Loop DDA-Based Instrumentation Amplifier[5]

By separating the AC coupling network from the primary gain-setting feedback path, the architecture prevents the large resistance elements from directly contributing significant thermal noise to the signal amplification process. As a result, the proposed configuration achieves a lower noise contribution compared to the conventional approach while still maintaining a very low high-pass cutoff frequency. Furthermore, the use of pseudo-resistors enhances integration capability in CMOS technology and allows efficient realization of giga-ohm range resistances without excessive area overhead.

This modified architecture therefore provides an improved trade-off between low-frequency response, noise performance, and silicon area efficiency. It retains the advantages of DDA-based signal processing while overcoming the key practical challenges associated with conventional feedback implementations.

1.1.3 Internal Architecture of the Proposed DDA-Based Instrumentation Amplifier:

The internal block-level architecture of the proposed DDA-based instrumentation amplifier is shown in Figure 3. The structure consists of two transconductance input stages, a high-resistance transimpedance stage, an embedded Common-Mode Feedback (CMFB) circuit, and a differential-to-single-ended output stage.

The two input transconductance blocks process the differential input signal pairs and convert the voltage differences into proportional currents. These currents are then summed and applied to the transimpedance stage, which performs current-to-voltage conversion and provides the primary voltage gain of the amplifier. This approach enables efficient differential signal amplification while maintaining high input impedance at the input terminals.

The transimpedance stage operates as a high-gain amplification block and forms the core of the DDA structure. However, in fully differential architectures, uncontrolled common-mode voltage variations can degrade performance and reduce output swing. To ensure stable operation, a Common-Mode Feedback (CMFB) circuit is incorporated within the architecture.

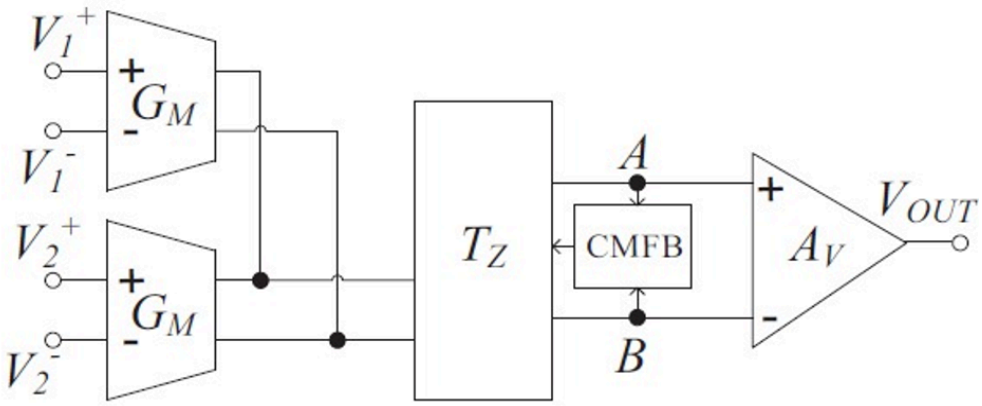

Fig 1.3: Proposed Internal Block Diagram of the Proposed DDA-Based Instrumentation Amplifier.[5]

The CMFB continuously senses the output common-mode level and adjusts the biasing conditions to maintain a constant and stable common-mode voltage at the internal nodes. This mechanism significantly enhances common-mode rejection and ensures proper functioning of the differential stages under low-voltage operation.

The final stage of the amplifier performs differential-to-single-ended conversion and provides additional gain to drive subsequent stages or external loads. By combining transconductance-based signal processing with a dedicated common-mode control mechanism, the proposed architecture achieves improved differential gain, enhanced CMRR performance, and stable operation suitable for precision low-level signal amplification.

1.2 LITERATURE REVIEW:

Instrumentation amplifier (INA) design has gained significant importance in low-power biomedical and IoT applications, where amplification of weak bio-signals with high common-mode rejection and minimal power consumption is essential. Over the years, various architectures have been proposed to improve gain accuracy, noise performance, and energy efficiency.

[1] Avoli et al. (2018) presented a low-power Differential Difference Amplifier (DDA)-based instrumentation amplifier specifically designed for neural recording applications in 65 nm CMOS technology. The proposed architecture employs a folded-cascode DDA combined with an embedded common-mode feedback (CMFB) loop to enhance common-mode rejection while relaxing strict resistor matching requirements typically found in conventional three-op-amp INAs. By exploiting subthreshold operation and operating at a low supply voltage of 1 V, the design achieves a bandwidth suitable for neural signals (1 Hz–5 kHz), a high CMRR exceeding 120 dB, and low input-referred noise performance, while maintaining a power consumption of approximately 1.12 μW. The work demonstrates that DDA-based architectures can effectively balance gain accuracy, noise performance, and energy efficiency, making them highly suitable for implantable and battery-operated biomedical front-end systems.

Razavi [2] presented a comprehensive treatment of CMOS analog circuit design, detailing gain enhancement techniques, cascading methods, and frequency compensation strategies. His work provides fundamental insight into intrinsic gain limitations in scaled technologies and serves as a theoretical basis for high-gain amplifier architectures such as folded cascode and multi-stage designs.

Gray et al. [3] discussed the analysis and design of analog integrated circuits with emphasis on multi-stage amplifier modeling, gain–bandwidth trade-offs, and stability considerations. Their framework for small-signal modeling and loop-gain analysis forms the foundation for understanding CMRR and PSRR behavior in precision instrumentation amplifiers.

Harrison and Charles [4] developed a low-power, low-noise CMOS amplifier for neural recording applications. By optimizing transconductance efficiency and minimizing flicker noise,

their design achieved excellent input-referred noise performance while operating under strict power constraints, making it highly relevant for biomedical front-end applications.

Harrison [5] further explored integrated circuits for brain activity monitoring, emphasizing noise-driven design methodology and power-efficient architectures. The study highlighted the importance of maximizing gm/Id efficiency and minimizing input noise in low-frequency biomedical amplifiers.

Enz et al. [6] introduced an analytical MOS transistor model valid across all regions of operation, particularly suited for low-voltage and low-current applications. Their work laid the groundwork for gm/Id-based design methodologies widely used in moderate and weak inversion analog circuit design.

Tsividis [7] provided a detailed treatment of MOS transistor operation and noise mechanisms, including thermal and flicker noise modeling. His analysis offers theoretical support for noise calculations and device sizing strategies in precision instrumentation amplifier design.

Johns and Martin [8] discussed analog integrated circuit design techniques including Miller compensation, pole-zero analysis, and multi-stage amplifier stabilization. Their work is frequently referenced for frequency compensation strategies in high-gain amplifier structures.

Gregorian and Temes [9] presented foundational concepts in analog MOS signal processing circuits, including high-gain amplifier architectures and common-mode control techniques. Their contributions are particularly relevant to folded cascode implementations and differential amplifier stability.

Sansen [10] analyzed precision analog circuit design with emphasis on CMRR, PSRR, and mismatch effects in integrated amplifiers. His work provides insight into how resistor mismatch and intrinsic gain influence common-mode rejection performance.

Khateb et al. [11] proposed a bulk-driven differential difference amplifier (DDA) suitable for low-voltage analog signal processing. Their architecture demonstrated improved signal swing and low-power operation, highlighting the applicability of DDA structures in modern CMOS technologies.

Steyaert et al. [12] developed a micropower low-noise instrumentation amplifier for medical applications. Their design emphasized precision amplification in the presence of low-frequency interference, establishing early design principles for biomedical instrumentation amplifiers.

Huijsing [13] examined operational amplifier theory with detailed discussion on common-mode feedback (CMFB) techniques and stability improvement methods. His work provides theoretical backing for CMFB loop implementation in fully differential architectures.

Johns and Martin [14] introduced CMOS pseudo-resistor structures capable of achieving extremely high resistance values in small silicon areas. Their approach enables low-frequency AC coupling in biomedical circuits without occupying excessive chip area.

Allen and Holberg [15] presented CMOS analog circuit design methodologies focusing on gain enhancement, frequency response, and power optimization. Their work supports systematic design of cascoded and multi-stage amplifiers targeting high CMRR and low power operation.

1.3 DESIGN SPECIFICATION:

The objective of this work is to design a low-power Differential-Difference Amplifier (DDA) based Instrumentation Amplifier (IA) for Electrocardiogram (ECG) signal acquisition using gpdk180 nm CMOS technology. The amplifier is designed to process standard clinical ECG signals with the following properties:

Table 1.1 Performance requirements of the proposed IA

Design Parameter	**Values**
Input amplitude	0.5-4 mV p-p
Bandwidth	0.005-150 Hz
IA Gain	26-40 dB
Total Gain	40-60 dB
Input Impedance	>10 MΩ
CMRR	> 90-100 dB
PSRR	> 70-80 dB
Noise	< 1-2 μVrms

Supply	1.8 V
Power	< 10-20 μW

Based on the defined ECG design specifications, the instrumentation amplifier must simultaneously achieve high differential gain, very high common-mode rejection ratio (CMRR), low input-referred noise, high input impedance, and low power consumption. Several instrumentation amplifier architectures were evaluated before selecting the final topology. The classical three-opamp instrumentation amplifier provides high gain and high input impedance. However, its CMRR strongly depends on precise matching of external feedback resistors. Since ECG acquisition demands very high rejection of 50/60 Hz common-mode interference, this architecture was not considered suitable.

OTA-based instrumentation amplifiers offer simplicity and lower area, but they generally suffer from limited open-loop gain and moderate CMRR performance. In addition, their PSRR performance is typically inferior due to limited intrinsic gain. For ECG front-end applications, where noise and common-mode interference are critical concerns, this architecture does not reliably meet the required performance targets.

To overcome these limitations, a Differential-Difference Amplifier (DDA) based instrumentation amplifier architecture was selected. The DDA structure processes two differential input pairs and produces an output proportional to the difference between these differential signals. This configuration enables implementation of instrumentation amplifier functionality while making CMRR largely independent of feedback resistor matching. As a result, high CMRR can be achieved primarily through intrinsic device matching and open-loop gain rather than passive component precision. This makes the DDA architecture particularly suitable for integrated biomedical front-end applications.

The overall architecture consists of differential input transconductors, a folded cascode transimpedance stage, an internal common-mode feedback (CMFB) loop, and a differential-to-single-ended output stage. The input transconductors convert differential input voltage into current. These currents are summed and processed by the folded cascode stage, which provides high output resistance and large voltage gain. The CMFB circuit stabilizes the output common-mode voltage and improves CMRR and PSRR. Finally, a differential-to-single-ended stage provides additional gain and produces a single-ended output suitable for driving subsequent stages such as filters or ADCs. The CMRR of such structures can be approximated as

$$CMRR \propto \frac{1}{\Delta R/R}$$

where $\Delta R/R$ represents resistor mismatch. [10] In CMOS technologies, achieving extremely precise matching without trimming is difficult, making it challenging to guarantee CMRR ≥ 90 dB. Therefore, this architecture is not robust for integrated ECG applications.

OTA-based instrumentation amplifiers offer simplicity and reduced area but generally suffer from limited open-loop gain. Since closed-loop CMRR depends on open-loop gain, insufficient intrinsic gain results in degraded performance. The closed-loop CMRR can be approximated as

$$CMRR_{CL} \approx CMRR_{OL} \cdot (1+A_{OL}\beta)$$

where A_{OL} is open-loop gain and □ is feedback factor. Thus, high A_{OL} is essential for achieving large CMRR. [3]

To overcome these limitations, a Differential-Difference Amplifier (DDA) based instrumentation amplifier was selected. The DDA processes two differential input signals and produces an output proportional to their difference:

$$V_{out} = A_{OL}[(V_1^+ - V_1^-) - (V_2^+ - V_2^-)] \qquad [11]$$

This configuration enables instrumentation functionality while making CMRR largely independent of feedback resistor matching. Instead, CMRR primarily depends on intrinsic device matching and open-loop gain, which can be controlled through careful transistor sizing and cascading.

The internal architecture consists of differential input transconductors, a folded cascode transimpedance stage, an internal common-mode feedback (CMFB) loop, and a differential-to-single-ended output stage. The input transconductors convert input voltage into current according to

$$I_{out} = g_m V_{in}$$

These currents are processed by the folded cascode stage, whose small-signal gain is approximately [2]

$$A_v \approx g_m r_o$$

Where g_m is transconductance and r_o is output resistance. With cascading, the effective output resistance increases significantly, allowing the total open-loop gain to approach

$$A_{OL} \approx (g_m r_o)^n$$

where nnn depends on the number of gain-enhancing stages (typically 3–4 in cascoded structures). High open-loop gain improves loop gain A_{OL}□,thereby enhancing both CMRR and PSRR. [2]

The electrode–skin interface introduces large DC offsets up to ±700 mV. Direct coupling would cause amplifier saturation. Therefore, AC coupling is implemented at the input using capacitors and MOS pseudo-resistors. The lower cutoff frequency is determined by

$$f_L = \frac{1}{2\pi RC}$$

To achieve f_L=0.05Hz with a capacitor of a few picofarads, resistance must be in the hundreds of giga-ohms range. Such large resistance values are realized using MOS pseudo-resistors operating in subthreshold regions.

Noise performance is the most critical design driver. The thermal noise current of a MOS transistor operating in saturation is [7]

$$\overline{i_n^2} = 4kT\gamma g_m$$

which leads to an input-referred voltage noise approximately equal to

$$\overline{v_{n,in}^2} = \frac{4kT\gamma}{g_m}$$

This equation shows that increasing g_m directly reduces input-referred noise. [7] Therefore, the input transistors are designed to maximize transconductance efficiency g_m/I_d. In weak inversion,

$$\frac{g_m}{I_D} \approx \frac{1}{nV_T}$$

where V_T is thermal voltage and n is the subthreshold slope factor. This allows large transconductance at low bias current, improving noise efficiency.[6]

The integrated input-referred noise over the ECG bandwidth is

$$V_{n,rms} = \sqrt{\int_{f_L}^{f_H} S_n(f)\ df}$$

where f_L=0.05Hz and f_H=150Hz. Flicker noise is significant at low frequencies and is given by

$$S_{flicker}(f) \propto \frac{1}{C_{ox}^2 WLf}$$

Thus, increasing device area W*L reduces flicker noise, which is particularly important for ECG signals.

Power consumption is constrained by

$$P = V_{DD} \times I_{total}$$

With V_{DD}=1.8V , limiting I_{total} below 10μA ensures power remains under 18μW. Bias currents are therefore allocated carefully, prioritizing the input stage since it dominates noise performance.

The common-mode feedback (CMFB) circuit stabilizes the output operating point by sensing the average of differential outputs:

$$V_{CM} = \frac{V_A + V_B}{2}$$

$$V_{CM} \rightarrow V_{REF}$$

The CMFB loop forces V_{CM} to track a reference voltage, ensuring proper biasing and improving suppression of common-mode disturbances. Since supply noise appears primarily as common-mode variation, high loop gain in CMFB enhances PSRR.

Frequency compensation is required due to the multi-stage structure. Miller compensation introduces a dominant pole at

$$f_p = \frac{g_m}{2\pi C_c}$$

and ensures a phase margin greater than 60 degrees. Because the required signal bandwidth is only 150 Hz, compensation can be implemented without excessive capacitance.[8]

Compared to the 65 nm implementation, 180 nm CMOS provides higher intrinsic gain and lower flicker noise, both advantageous for low-frequency biomedical applications. Although the transition frequency f_T is lower and parasitic capacitances are larger, these limitations are not critical because the target bandwidth is only 150 Hz. Additionally, the higher 1.8 V supply voltage provides improved voltage headroom for cascoded structures.

The overall design methodology therefore follows a noise-driven, gain-enhanced, and power-optimized approach: specifications are translated into electrical targets. The DDA architecture is selected. The input stage is designed based on noise equations. Cascading is used to maximize gain. CMFB is implemented to stabilize common-mode voltage. AC coupling is introduced for offset rejection. Miller compensation ensures stability and bias currents are optimized to meet the power budget.[15]

Table 1.2 summarizes the bias voltages and compensation capacitor values used in the proposed DDA-based instrumentation amplifier implemented in gpdk180 nm CMOS technology with a 1.8 V supply. The input common-mode voltage is set to 900 mV to ensure symmetrical signal swing around mid-supply and to maintain proper headroom across the folded-cascode structure. Bias voltages V_{B1},V_{B2} and cascode bias nodes V_{BC2}, V_{BC3}, V_{BC4} and V_{BC5} are carefully selected to guarantee saturation operation of all transistors while maximizing output dynamic range under low-power constraints. The reference voltage V_{REF} is fixed at mid-supply to stabilize the output

common-mode level through the CMFB loop. The compensation capacitors C_{C1} and C_{C2} are chosen to ensure closed-loop stability with adequate phase margin while maintaining the required ECG bandwidth (0.05–150 Hz). These biasing conditions collectively ensure proper transconductance efficiency, sufficient intrinsic gain, and stable operation within the specified low-power design target.

Table 1.2 Bias and design parameters for the proposed IA in GPDK180nm

Parameter	**Value**
Technology Used	180nm
Supply Voltage	+1.8V
V_1^+, V_2^+	DC=900mV, AC=1V
V_1^-, V_2^-	DC=900mV, AC=-1V
V_{B1}	DC=1.2V
V_{B2}	DC=600mV
V_{BC4}	DC=650mV
V_{BC2}	DC=1.12V
V_{BC3}	DC=1V
V_{BC5}	DC=600mV
V_{REF}	DC=900mV
C_{C1}	200fF
C_{C2}	200fF

Table 1.3 presents the transistor dimensions and corresponding g_m/I_d operating points for all MOS devices used in the proposed DDA-based instrumentation amplifier implemented in gpdk180 nm CMOS technology. The input differential pair (M1–M4) is designed with a large channel length and high $g_m/I_d \approx 20$, ensuring operation in moderate inversion to maximize transconductance efficiency while minimizing input-referred noise. The cascode and folded-branch devices (M5–M8) are biased at moderate g_m/I_d values (≈ 9–14) to provide sufficient intrinsic gain and output resistance without excessive current consumption. The current mirror and bias transistors (M9–M14, M19–M22) are sized to balance matching accuracy, output impedance, and stability of bias currents, with g_m/I_d values selected to maintain saturation under worst-case voltage headroom conditions. The second-stage and output devices (M15–M18) are

dimensioned to provide adequate gain and drive capability while preserving overall power efficiency.

Table 1.3 Device Sizing and g_m/I_d operating points of the proposed IA

MOSFET	**L(µm)**	**W(µm)**	**g_m/I_d**
M1, M2, M3, M4	30	3	20
M5, M6	3	10	14
M7, M8	5	8	9
M9, M10	3	5	9
M11, M12	1	7	11
M13, M14	1	10	11
M15, M16	1.8	25	14
M17	3	10	9
M18	3	8	9
M19, M20	3.5	10	11
M21	3	8	11
M22	7.8	8	11

Overall, the device sizing reflects a deliberate trade-off between noise performance, intrinsic gain enhancement, voltage headroom at 1.8 V supply, and ultra-low power operation, ensuring that the instrumentation amplifier meets ECG front-end specifications in terms of gain, bandwidth, noise, and stability.

1.4 BLOCK DIAGRAM:

1.4.1 Transistor-Level Implementation of the Proposed DDA-Based Instrumentation Amplifier:

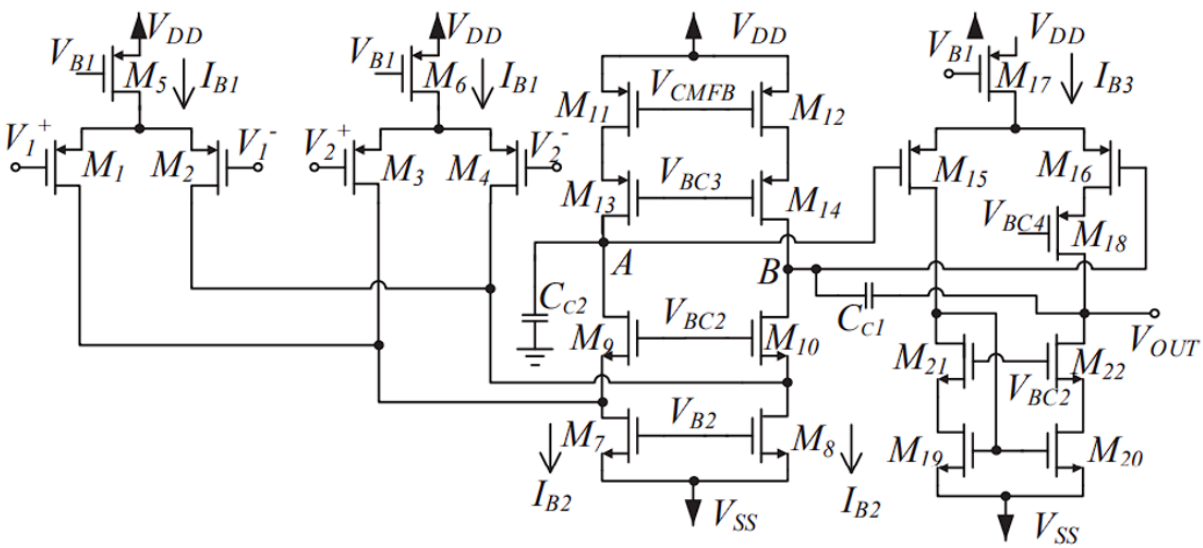

Fig 1.4 illustrates the complete transistor-level schematic of the proposed Differential Difference Amplifier (DDA) based Instrumentation Amplifier implemented in 180 nm CMOS technology.[5]

The architecture consists of three major functional blocks: the differential input transconductance stage, the folded-cascode transimpedance stage, and the differential-to-single-ended output stage.

The input stage is formed by two PMOS differential pairs (M1–M4). These devices operate in moderate inversion with a high gm/IDg_m/I_Dgm/ID ratio to maximize transconductance efficiency while minimizing input-referred noise. Since ECG signals lie in the low-frequency range of 0.05–150 Hz and have amplitudes in the millivolt range, noise optimization at the input stage is critical. The large channel length selected for these transistors reduces flicker noise, which dominates at low frequencies.

The differential currents generated by the input pairs are folded through transistors M7 and M8 into the folded-cascode branch. The folded-cascode structure significantly increases output resistance and enhances intrinsic gain. The small-signal gain of this stage can be approximated as:

$$A_v \approx g_m r_o$$

With cascading, the effective output resistance increases substantially, allowing the overall open-loop gain to approach higher-order gain multiplication. This high intrinsic gain is essential for achieving the required closed-loop CMRR for ECG signal acquisition.

Transistors M11–M14 form the upper cascoded current mirror load, further improving gain and output impedance. Proper biasing through V_{BC2}, V_{BC3}, and V_{BC4} ensures all devices remain in saturation under a 1.8 V supply, preserving voltage headroom.

The differential output nodes A and B are then connected to a second-stage amplifier composed of transistors M15–M22. This stage performs differential-to-single-ended conversion and provides additional gain to drive subsequent blocks such as filters or ADC interfaces.

Miller compensation capacitor C_{C1} and capacitor C_{C2} are included to ensure stability. Since the required bandwidth for ECG signals is only 150 Hz, frequency compensation is achieved without large capacitive loading. The dominant pole introduced by Miller compensation guarantees a phase margin above 60°, ensuring stable closed-loop operation.

Overall, the transistor-level implementation balances gain enhancement, low-noise operation, and low-power performance suitable for biomedical ECG front-end applications.

1.4.2 Common-Mode Feedback (CMFB) Circuit:

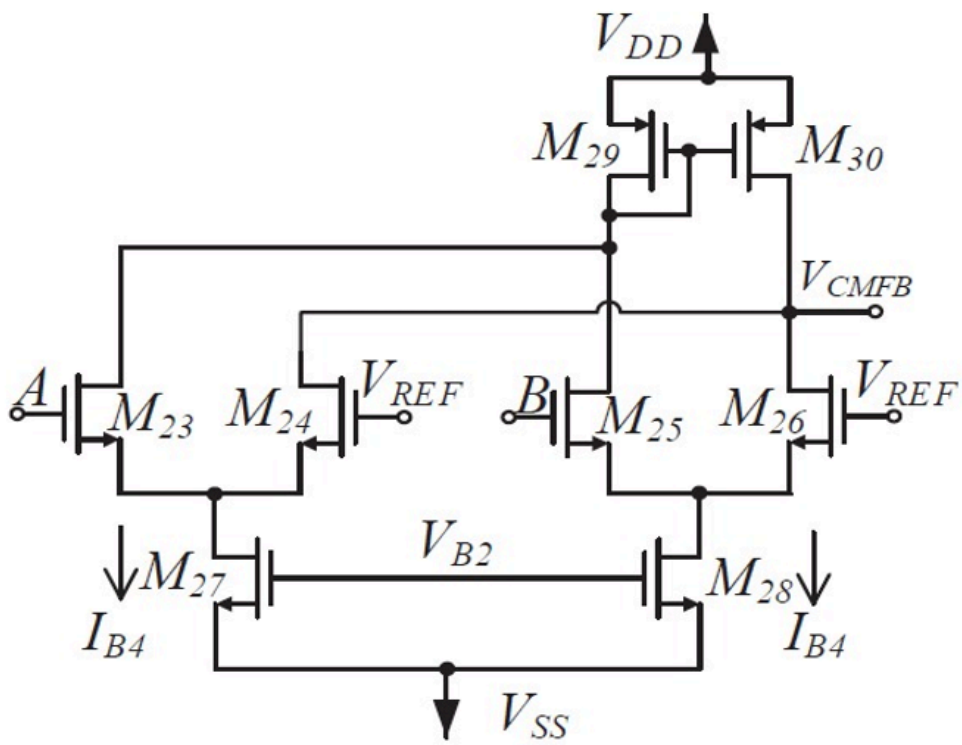

Fig 1.5 shows the schematic of the Common-Mode Feedback (CMFB) circuit used to stabilize the output common-mode voltage of the folded-cascode DDA. [5]

In fully differential architectures, uncontrolled common-mode drift can push transistors out of saturation and degrade gain and linearity. To prevent this, the CMFB circuit senses the average

voltage of the differential outputs (nodes A and B) and compares it with a reference voltage V_{REF}, which is set at mid-supply (900 mV).

The differential pair formed by M23–M26 detects deviations between the sensed common-mode voltage and the reference. The resulting error signal modulates the bias currents of transistors M11 and M12 through the current mirror pair M29 and M30.

In low-frequency ECG applications, high rejection of 50/60 Hz power-line interference is critical. The CMFB loop contributes significantly to suppressing common-mode disturbances, thereby improving overall signal integrity.

The bias currents I_{B4} are selected to provide adequate loop gain while maintaining low overall power consumption. Since the bandwidth requirement is limited to 150 Hz, the CMFB loop is easily stabilized without excessive compensation.

1.4.2 Schematic Of DDA:

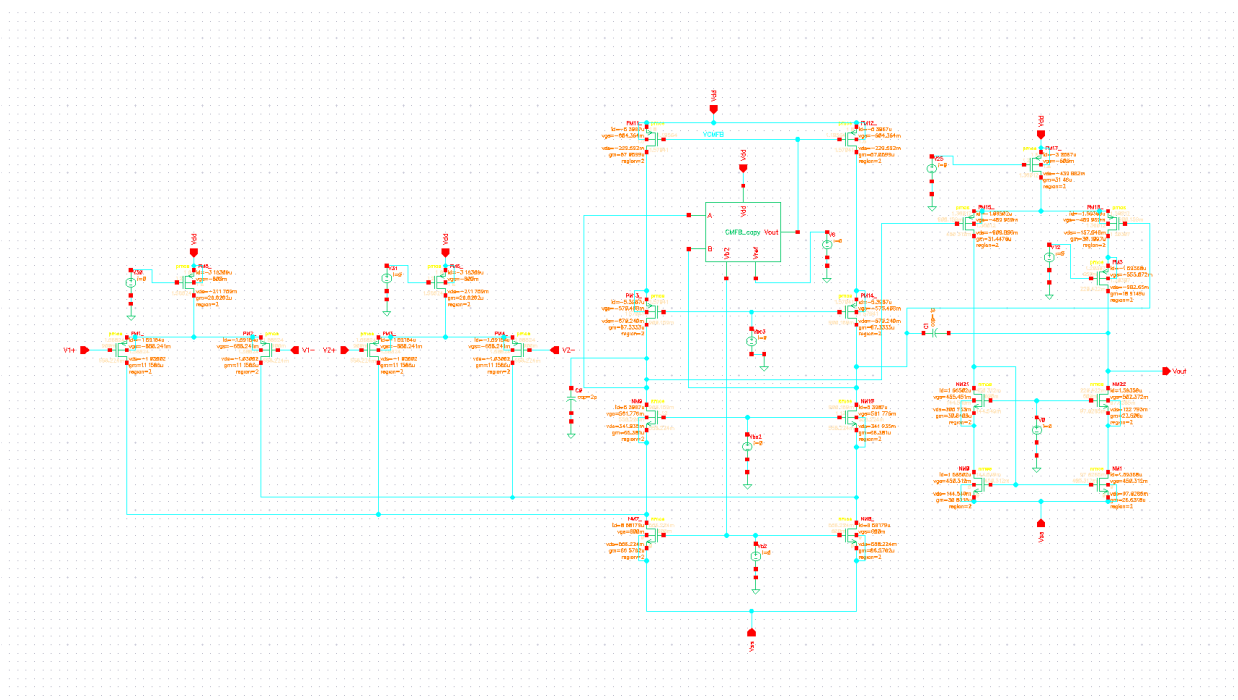

Fig 1.6 shows the schematic diagram of the DDA based instrumentation amplifier.

The above Figure presents the transistor-level implementation of the proposed DDA-based instrumentation amplifier using a folded-cascode architecture.

The circuit consists of three main sections:

1. Input Transconductance Stage (M1–M4):
 Two PMOS differential pairs form the differential-difference amplifier (DDA) input stage.

These devices convert the input differential voltages into currents while providing low input-referred noise.

2. Folded Cascode Transimpedance Stage (M7–M14):
The summed currents from the input stage are folded and converted into output voltages at nodes A and B. This stage provides high gain and high output resistance. An embedded common-mode feedback (CMFB) loop stabilizes the output common-mode level and improves CMRR.

3. Differential to Single Ended Output Stage (M15–M22):
This stage converts the differential signal at nodes A and B into a single-ended output V_{Out} and provides additional voltage gain. Miller compensation capacitor C_{C1} and capacitor C_{C2} ensure frequency stability.

The amplifier operates in the subthreshold region with a 1 V supply to achieve ultra-low power consumption while maintaining high CMRR and adequate bandwidth for neural recording applications.

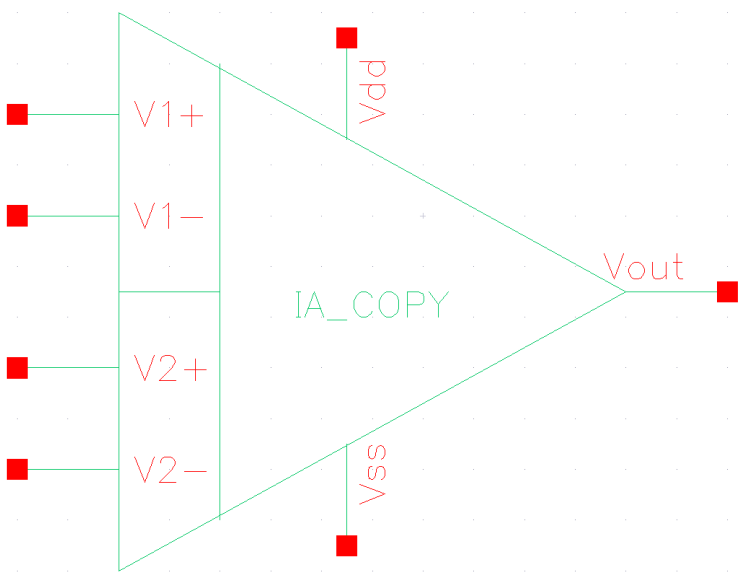

Fig 1.7 illustrates the symbol of the DDA based instrumentation amplifier.

Figure 1.7 illustrates the symbol of the DDA-based instrumentation amplifier. It consists of two differential input pairs (V_{1+},V_{1-}) and (V_{2+},V_{2-}),which are processed by the amplifier to produce a single-ended output V_{Out}. The terminals V_{DD} and V_{SS} represent the positive and negative supply voltages, respectively.

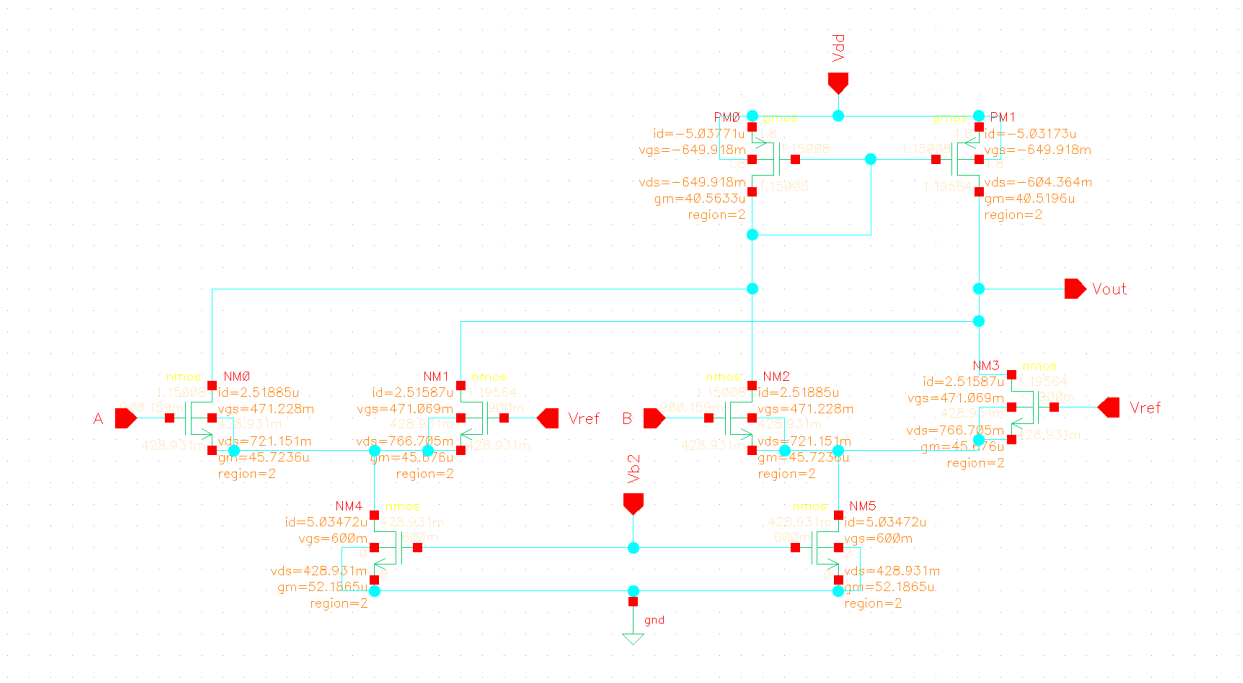

Fig 1.8 Shows the schematic of the common mode feedback loop to generate V_{CMFB} in Figure 1.6.

The common-mode feedback (CMFB) circuit senses the average of the differential output nodes (A and B) and compares it with the reference voltage V_{ref}. Based on the error, it adjusts the bias currents of the amplifier through the PMOS current mirror to stabilize the output common-mode voltage. This ensures proper differential operation, improves CMRR, and maintains the desired DC operating point of the folded-cascode stage.

1.6 SIMULATED RESULTS:

1.6.1 Open Loop Gain Plot:

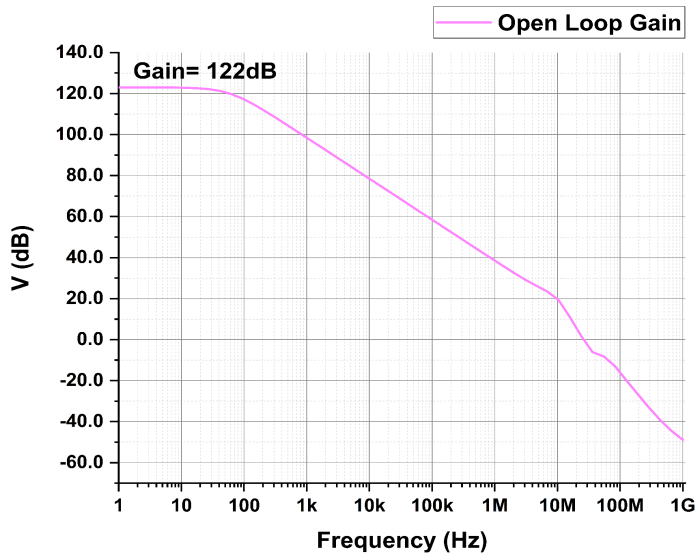

Fig 1.9: Open loop gain plot is shown

The open-loop response shows a high DC gain of about 122 dB with a controlled roll-off at higher frequencies, confirming stable operation of the proposed amplifier.

1.6.2 Closed Loop Gain Plot:

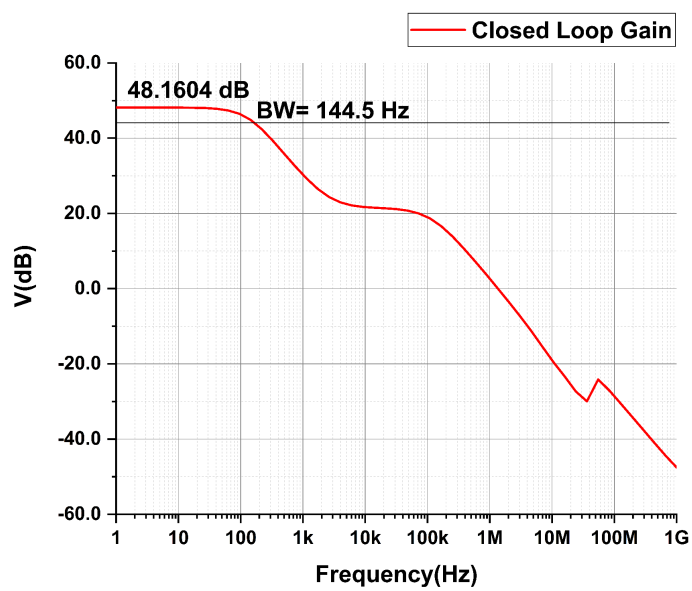

Fig 1.10: Closed loop gain plot is shown

The closed-loop frequency response of the proposed instrumentation amplifier is shown in the figure. The amplifier exhibits a midband gain of approximately 48.16 dB and a bandwidth of about 144.5 Hz. The gain remains flat in the low-frequency region and gradually decreases at

higher frequencies due to the effect of compensation and internal poles, indicating stable closed-loop operation of the amplifier.

1.6.3 Closed Loop Phase Plot:

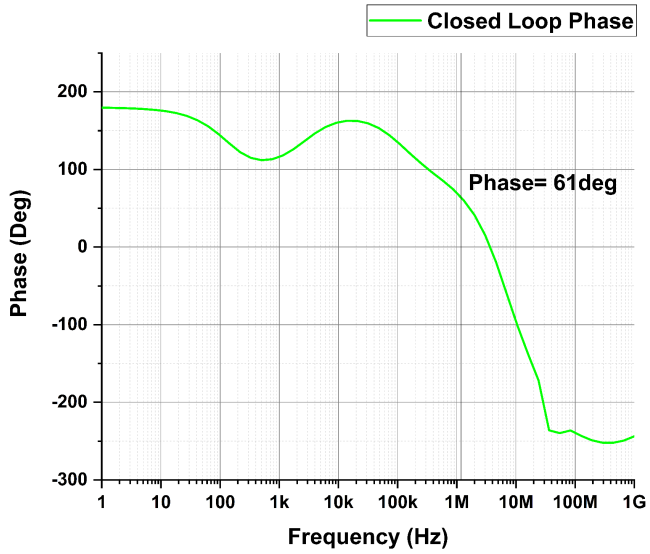

Figure 1.11: Closed loop phase plot is shown

The closed-loop phase response of the proposed instrumentation amplifier is shown in the figure. The amplifier exhibits a phase margin of approximately 61°, indicating a well-compensated and stable closed-loop operation.

1.6.4 Closed Loop CMRR Plot:

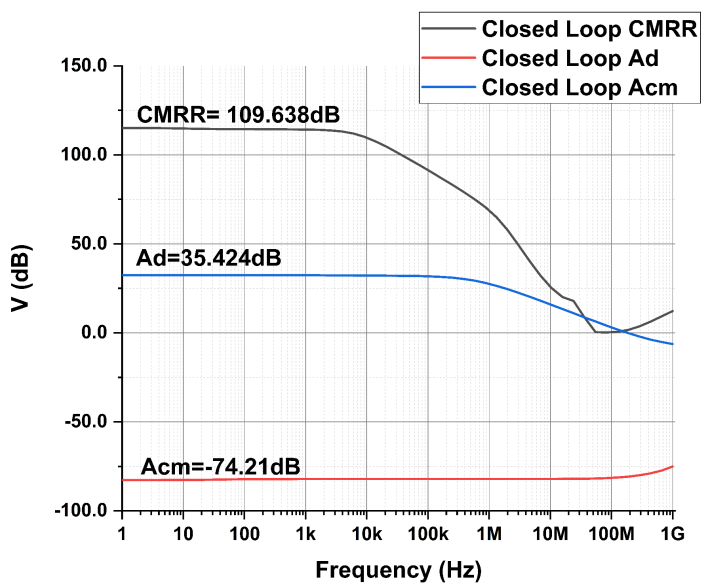

Fig 1.12: Illustration of the closed loop CMRR plot

The proposed amplifier achieves a CMRR of about 109.64 dB with Ad ≈ 35.42 dB and Acm ≈ −74.21 dB, indicating excellent common-mode noise rejection.

1.6.5 Closed Loop Offset Plot:

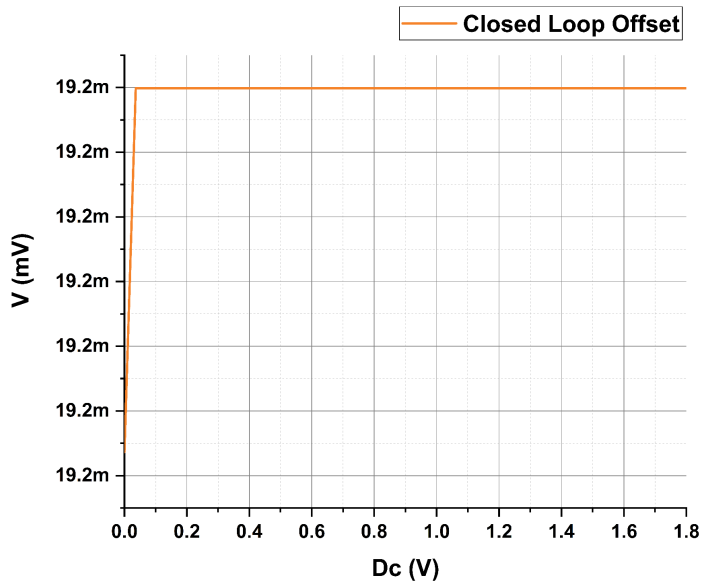

Fig 1.13: Closed loop offset plot is shown

The closed-loop offset response of the proposed instrumentation amplifier is shown in the figure. The output offset voltage is approximately 19.2 mV and remains nearly constant over the applied DC sweep range. This indicates good DC stability of the amplifier, although further offset reduction techniques may be required for ultra-low-signal neural recording applications.

1.6.6 Closed Loop Input Noise Plot:

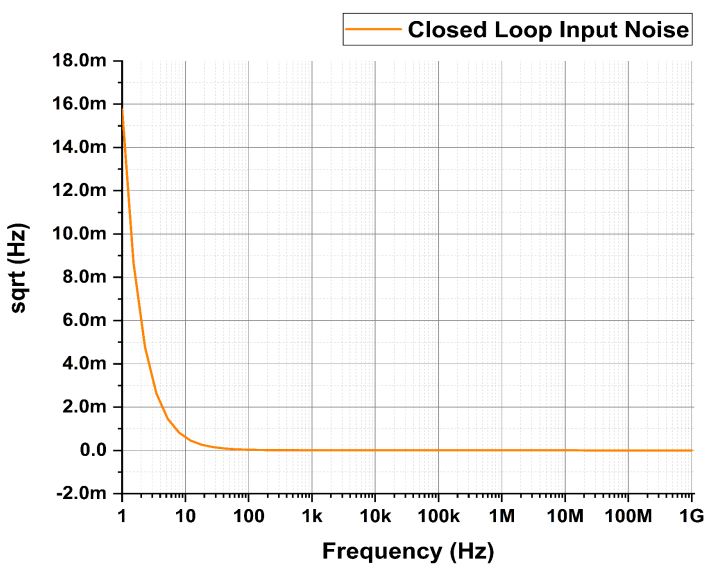

Fig 1.14: Closed loop input noise plot is shown

The closed-loop input-referred noise performance of the proposed instrumentation amplifier is shown in the figure. The noise is higher at low frequencies due to flicker (1/f) noise and decreases rapidly as frequency increases, eventually reaching a flat thermal noise floor at higher frequencies. This behavior indicates that the amplifier maintains low noise within the operating bandwidth, making it suitable for low-amplitude neural signal acquisition.

1.6.7 Closed Loop Output Noise Plot:

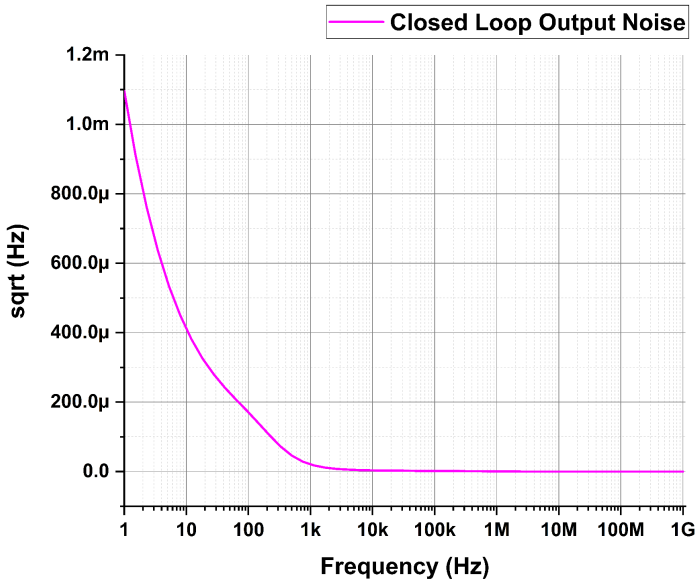

Fig 1.15: Illustration of the closed loop output noise plot

The output noise decreases with frequency, showing flicker noise dominance at low frequencies and a flat thermal noise floor at higher frequencies, confirming low-noise performance.

1.7 COMPARISON TABLE:

Table 1.4 Illustration of performance comparison of the proposed op-amp

Parameter	**Our Work**	[1]	[2]	[3]	[4]
CMOS Technology (nm)	**180**	65	65	130	350
Supply Voltage (V)	**1.8**	0.4	1	1.2	1
DC Gain (dB)	**48.16**	24	40	46	40
Phase Margin (◦)	**61.5**	90	-	-	-
Bandwidth (Hz)	**144.5**	11K	5K	7.4K	-

CMRR (dB)	**109.64**	83	124	85	48.9
Power (µW)	**3.28**	9.2	1.12	5.59	72.75n
Input Noise (µVrms)	**4.1**	3	8.1	3.8	35.5

Table 1.4 presents a comparative analysis of the proposed 180 nm DDA-based instrumentation amplifier with previously reported designs implemented in 65 nm, 130 nm, and 350 nm CMOS technologies. The comparison includes key performance parameters such as DC gain, phase margin, bandwidth, CMRR, power consumption, and input-referred noise.

The proposed work achieves a DC gain of 48.16 dB, which is higher than most referenced designs except [2], while operating at a higher supply voltage of 1.8 V suitable for 180 nm technology. Although advanced 65 nm implementations operate at lower supply voltages and reduced power, they target neural bandwidths in the kilohertz range, whereas the proposed design is optimized specifically for low-frequency ECG signals (0.05–150 Hz).

In terms of stability, the achieved phase margin of 61.5° confirms stable closed-loop operation with proper frequency compensation. The bandwidth of 144.5 Hz aligns well with the ECG signal spectrum and avoids unnecessary high-frequency amplification, thereby supporting low-noise operation.

A significant strength of the proposed architecture is its high CMRR of 109.64 dB, which is superior to [1], [3], and [4], and comparable to advanced neural front-end designs. This improvement is mainly attributed to the folded-cascode DDA structure combined with an embedded CMFB loop, which enhances common-mode suppression and reduces sensitivity to resistor mismatch.

The total power consumption of 3.28 µW remains within the low-power biomedical front-end range, making the design suitable for portable ECG acquisition systems. While some 65 nm designs achieve lower absolute power, they operate at significantly lower supply voltages and different bandwidth targets.

The input-referred noise of 4.1 µVrms is maintained within acceptable limits for ECG applications, demonstrating that the input-stage transconductance optimization and device sizing effectively balance noise and power trade-offs.

Overall, the comparison confirms that the proposed 180 nm DDA-based instrumentation amplifier achieves a well-balanced trade-off between gain, CMRR, noise, bandwidth, and power consumption. The design is particularly optimized for low-frequency ECG signal acquisition, making it highly suitable for integrated biomedical front-end applications.

1.8 CONCLUSION:

This work presented the design and analysis of a Differential Difference Amplifier (DDA) based instrumentation amplifier for low-amplitude biomedical signal acquisition, specifically ECG signals. Since ECG signals are weak and highly susceptible to common-mode noise, power-line interference, and electrode disturbances, a DDA-based architecture was selected for its strong differential amplification capability and effective common-mode rejection.A key focus of the design was the Common Mode Feedback (CMFB) circuit. The CMFB continuously monitors the average output voltage and compares it with a reference level to regulate biasing conditions. This ensures proper output centering, improves stability, and significantly enhances the common-mode rejection ratio (CMRR), which is critical for accurate ECG signal processing.The proposed design satisfies essential ECG front-end requirements, including high CMRR, stable operation, sufficient gain, and low power consumption. Careful selection of bias currents and transistor dimensions was necessary to maintain reliable performance in the low-frequency ECG range, directly influencing gain, stability, and noise behavior. The study also highlighted the impact of process variations and device mismatches, with the DDA architecture showing reduced sensitivity to resistor mismatch compared to conventional instrumentation amplifiers, making it suitable for CMOS integration. Overall, this work establishes a solid foundation for further improvements such as noise optimization, bandwidth refinement, power reduction, and integration with filters and ADCs to develop a complete low-power biomedical front-end system for practical ECG monitoring applications.

1.9 REFERENCES:

[1] P. Gray et al., Analysis and Design of Analog Integrated Circuits, Wiley.

[2] W. K. Chen, CMOS Analog Circuit Design, Oxford.

[3] I. Corbacho, J. M. Carrillo, J. L. Aus´ın, M. A. Dom´ınguez, R. P´erez-Aloe, and ´ J. F. Duque-Carrillo, “A Fully-Differential CMOS Instrumentation Amplifier for Bioimpedance-Based IoT Medical Devices,” J. Low Power Electron. Appl., vol. 13, no. 1, 2023. :contentReference[oaicite:0]index=0

[4] I. Corbacho, “Compact CMOS Wideband Instrumentation Amplifiers for Bioimpedance and Biomedical Signals,” Electronics, vol. 11, no. 11, 2022. :contentReference[oaicite:1]index=1

[5] Avoli, M., Centurelli, F., Monsurrò, P., Scotti, G., & Trifiletti, A. (2018). Low power DDA-based instrumentation amplifier for neural recording applications in 65 nm CMOS. *International Journal of Electronics and Communications (AEÜ)*, 92, 30–35.

[6] Razavi, B. (2017). *Design of analog CMOS integrated circuits* (2nd ed.). New York, NY, USA: McGraw-Hill Education.

[7] Gray, P. R., Hurst, P. J., Lewis, S. H., & Meyer, R. G. (2009). *Analysis and design of analog integrated circuits* (5th ed.). Hoboken, NJ, USA: John Wiley & Sons.

[8] Harrison, R. R., & Charles, C. (2003). A low-power low-noise CMOS amplifier for neural recording applications. *IEEE Journal of Solid-State Circuits*, 38(6), 958–965. https://doi.org/10.1109/JSSC.2003.811979

[9] Harrison, R. R. (2008). The design of integrated circuits to observe brain activity. *IEEE Transactions on Biomedical Circuits and Systems*, 2(1), 1–9. https://doi.org/10.1109/TBCAS.2008.915566

[10] Enz, C. C., Krummenacher, F., & Vittoz, E. A. (1995). An analytical MOS transistor model valid in all regions of operation and dedicated to low-voltage and low-current applications. *Analog Integrated Circuits and Signal Processing*, 8(1), 83–114. https://doi.org/10.1007/BF01239481

[11] Tsividis, Y. (2011). *Operation and modeling of the MOS transistor* (3rd ed.). New York, NY, USA: Oxford University Press.

[12] Johns, D. A., & Martin, K. (1997). *Analog integrated circuit design*. New York, NY, USA: John Wiley & Sons.

[13] Gregorian, R., & Temes, G. C. (1986). *Analog MOS integrated circuits for signal processing*. New York, NY, USA: John Wiley & Sons.

[14] Sansen, W. (2006). *Analog design essentials*. Dordrecht, The Netherlands: Springer.

[15] Khateb, F., Biolek, D., & Vávra, J. (2011). Bulk-driven differential difference amplifier and its application in analog signal processing. *Microelectronics Journal*, 42(2), 321–329. https://doi.org/10.1016/j.mejo.2010.09.006