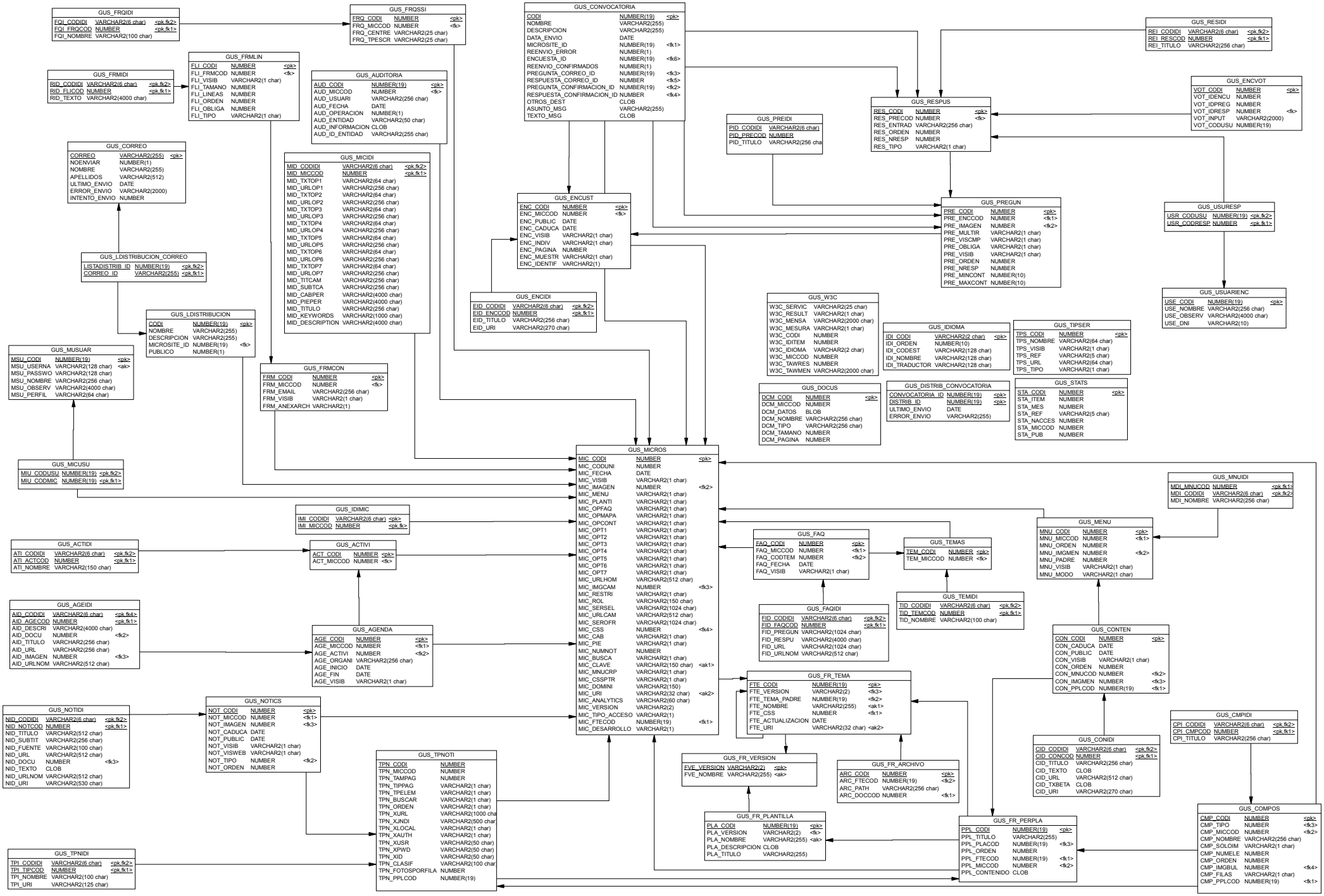
GUS_FRQIDI
FQI_CODIDI VARCHAR2(6 char) <pk,fk2>
FQI_FRQCOD NUMBER <pk,fk1>
FQI_NOMBRE VARCHAR2(100 char)
GUS_FRQSSI
FRQ_CODI NUMBER <pk>
FRQ_MICCOD NUMBER <fk>
FRQ_CENTRE VARCHAR2(25 char)
FRQ_TPESCR VARCHAR2(25 char)
GUS_CONVOCATORIA
CODI NUMBER(19) <pk>
NOMBRE VARCHAR2(255)
DESCRIPCION VARCHAR2(255)
DATA_ENVIO DATE
MICROSITE_ID NUMBER(19) <fk1>
REENVIO_ERROR NUMBER(1)
ENCUESTA_ID NUMBER(19) <fk6>
REENVIO_CONFIRMADOS NUMBER(1)
PREGUNTA_CORREO_ID NUMBER(19) <fk3>
RESPUESTA_CORREO_ID NUMBER <fk5>
PREGUNTA_CONFIRMACION_ID NUMBER(19) <fk2>
RESPUESTA_CONFIRMACION_ID NUMBER <fk4>
OTROS_DEST CLOB
ASUNTO_MSG VARCHAR2(255)
TEXTO_MSG CLOB
GUS_RESIDI
REI_CODIDI VARCHAR2(6 char) <pk,fk2>
REI_RESCOD NUMBER <pk,fk1>
REI_TITULO VARCHAR2(256 char)
GUS_FRMLIN
FLI_CODI NUMBER <pk>
FLI_FRMCOD NUMBER <fk>
FLI_VISIB VARCHAR2(1 char)
FLI_TAMANO NUMBER
FLI_LINEAS NUMBER
FLI_ORDEN NUMBER
FLI_OBLIGA NUMBER
FLI_TIPO VARCHAR2(1 char)
GUS_FRMIDI
RID_CODIDI VARCHAR2(6 char) <pk,fk2>
RID_FLICOD NUMBER <pk,fk1>
RID_TEXTO VARCHAR2(4000 char)
GUS_AUDITORIA
AUD_CODI NUMBER(19) <pk>
AUD_MICCOD NUMBER <fk>
AUD_USUARI VARCHAR2(256 char)
AUD_FECHA DATE
AUD_OPERACION NUMBER(1)
AUD_ENTIDAD VARCHAR2(50 char)
AUD_INFORMACION CLOB
AUD_ID_ENTIDAD VARCHAR2(255 char)
GUS_ENCVOT
VOT_CODI NUMBER <pk>
VOT_IDENCU NUMBER
VOT_IDPREG NUMBER
VOT_IDRESP NUMBER <fk>
VOT_INPUT VARCHAR2(2000)
VOT_CODUSU NUMBER(19)
GUS_RESPUS
RES_CODI NUMBER <pk>
RES_PRECOD NUMBER <fk>
RES_ENTRAD VARCHAR2(256 char)
RES_ORDEN NUMBER
RES_NRESP NUMBER
RES_TIPO VARCHAR2(1 char)
GUS_PREIDI
PID_CODIDI VARCHAR2(6 char)
PID_PRECOD NUMBER
PID_TITULO VARCHAR2(256 cha
GUS_CORREO
CORREO VARCHAR2(255) <pk>
NOENVIAR NUMBER(1)
NOMBRE VARCHAR2(255)
APELLIDOS VARCHAR2(512)
ULTIMO_ENVIO DATE
ERROR_ENVIO VARCHAR2(2000)
INTENTO_ENVIO NUMBER
GUS_MICIDI
MID_CODIDI VARCHAR2(6 char) <pk,fk2>
MID_MICCOD NUMBER <pk,fk1>
MID_TXTOP1 VARCHAR2(64 char)
MID_URLOP1 VARCHAR2(256 char)
MID_TXTOP2 VARCHAR2(64 char)
MID_URLOP2 VARCHAR2(256 char)
MID_TXTOP3 VARCHAR2(64 char)
MID_URLOP3 VARCHAR2(256 char)
MID_TXTOP4 VARCHAR2(64 char)
MID_URLOP4 VARCHAR2(256 char)
MID_TXTOP5 VARCHAR2(64 char)
MID_URLOP5 VARCHAR2(256 char)
MID_TXTOP6 VARCHAR2(64 char)
MID_URLOP6 VARCHAR2(256 char)
MID_TXTOP7 VARCHAR2(64 char)
MID_URLOP7 VARCHAR2(256 char)
MID_TITCAM VARCHAR2(256 char)
MID_SUBTCA VARCHAR2(256 char)
MID_CABPER VARCHAR2(4000 char)
MID_PIEPER VARCHAR2(4000 char)
MID_TITULO VARCHAR2(256 char)
MID_KEYWORDS VARCHAR2(1000 char)
MID_DESCRIPTION VARCHAR2(4000 char)
GUS_ENCUST
ENC_CODI NUMBER <pk>
ENC_MICCOD NUMBER <fk>
ENC_PUBLIC DATE
ENC_CADUCA DATE
ENC_VISIB VARCHAR2(1 char)
ENC_INDIV VARCHAR2(1 char)
ENC_PAGINA NUMBER
ENC_MUESTR VARCHAR2(1 char)
ENC_IDENTIF VARCHAR2(1)
GUS_PREGUN
PRE_CODI NUMBER <pk>
PRE_ENCCOD NUMBER <fk1>
PRE_IMAGEN NUMBER <fk2>
PRE_MULTIR VARCHAR2(1 char)
PRE_VISCMP VARCHAR2(1 char)
PRE_OBLIGA VARCHAR2(1 char)
PRE_VISIB VARCHAR2(1 char)
PRE_ORDEN NUMBER
PRE_NRESP NUMBER
PRE_MINCONT NUMBER(10)
PRE_MAXCONT NUMBER(10)
GUS_USURESP
USR_CODUSU NUMBER(19) <pk,fk2>
USR_CODRESP NUMBER <pk,fk1>
GUS_LDISTRIBUCION_CORREO
LISTADISTRIB_ID NUMBER(19) <pk,fk2>
CORREO_ID VARCHAR2(255) <pk,fk1>
GUS_ENCIDI
EID_CODIDI VARCHAR2(6 char) <pk,fk2>
EID_ENCCOD NUMBER <pk,fk1>
EID_TITULO VARCHAR2(256 char)
EID_URI VARCHAR2(270 char)
GUS_W3C
W3C_SERVIC VARCHAR2(25 char)
W3C_RESULT VARCHAR2(1 char)
W3C_MENSA VARCHAR2(2000 char)
W3C_MESURA VARCHAR2(1 char)
W3C_CODI NUMBER
W3C_IDITEM NUMBER
W3C_IDIOMA VARCHAR2(2 char)
W3C_MICCOD NUMBER
W3C_TAWRES NUMBER
W3C_TAWMEN VARCHAR2(2000 char)
GUS_IDIOMA
IDI_CODI VARCHAR2(2 char) <pk>
IDI_ORDEN NUMBER(10)
IDI_CODEST VARCHAR2(128 char)
IDI_NOMBRE VARCHAR2(128 char)
IDI_TRADUCTOR VARCHAR2(128 char)
GUS_TIPSER
TPS_CODI NUMBER <pk>
TPS_NOMBRE VARCHAR2(64 char)
TPS_VISIB VARCHAR2(1 char)
TPS_REF VARCHAR2(5 char)
TPS_URL VARCHAR2(64 char)
TPS_TIPO VARCHAR2(1 char)
GUS_USUARIENC
USE_CODI NUMBER(19) <pk>
USE_NOMBRE VARCHAR2(256 char)
USE_OBSERV VARCHAR2(4000 char)
USE_DNI VARCHAR2(10)
GUS_LDISTRIBUCION
CODI NUMBER(19) <pk>
NOMBRE VARCHAR2(255)
DESCRIPCION VARCHAR2(255)
MICROSITE_ID NUMBER(19) <fk>
PUBLICO NUMBER(1)
GUS_MUSUAR
MSU_CODI NUMBER(19) <pk>
MSU_USERNA VARCHAR2(128 char) <ak>
MSU_PASSWO VARCHAR2(128 char)
MSU_NOMBRE VARCHAR2(256 char)
MSU_OBSERV VARCHAR2(4000 char)
MSU_PERFIL VARCHAR2(64 char)
GUS_FRMCON
FRM_CODI NUMBER <pk>
FRM_MICCOD NUMBER <fk>
FRM_EMAIL VARCHAR2(256 char)
FRM_VISIB VARCHAR2(1 char)
FRM_ANEXARCH VARCHAR2(1)
GUS_DOCUS
DCM_CODI NUMBER <pk>
DCM_MICCOD NUMBER
DCM_DATOS BLOB
DCM_NOMBRE VARCHAR2(256 char)
DCM_TIPO VARCHAR2(256 char)
DCM_TAMANO NUMBER
DCM_PAGINA NUMBER
GUS_DISTRIB_CONVOCATORIA
CONVOCATORIA_ID NUMBER(19) <pk>
DISTRIB_ID NUMBER(19) <pk>
ULTIMO_ENVIO DATE
ERROR_ENVIO VARCHAR2(255)
GUS_STATS
STA_CODI NUMBER <pk>
STA_ITEM NUMBER
STA_MES NUMBER
STA_REF VARCHAR2(5 char)
STA_NACCES NUMBER
STA_MICCOD NUMBER
STA_PUB NUMBER
GUS_MICUSU
MIU_CODUSU NUMBER(19) <pk,fk2>
MIU_CODMIC NUMBER(19) <pk,fk1>
GUS_MICROS
MIC_CODI NUMBER <pk>
MIC_CODUNI NUMBER
MIC_FECHA DATE
MIC_VISIB VARCHAR2(1 char)
MIC_IMAGEN NUMBER <fk2>
MIC_MENU VARCHAR2(1 char)
MIC_PLANTI VARCHAR2(1 char)
MIC_OPFAQ VARCHAR2(1 char)
MIC_OPMAPA VARCHAR2(1 char)
MIC_OPCONT VARCHAR2(1 char)
MIC_OPT1 VARCHAR2(1 char)
MIC_OPT2 VARCHAR2(1 char)
MIC_OPT3 VARCHAR2(1 char)
MIC_OPT4 VARCHAR2(1 char)
MIC_OPT5 VARCHAR2(1 char)
MIC_OPT6 VARCHAR2(1 char)
MIC_OPT7 VARCHAR2(1 char)
MIC_URLHOM VARCHAR2(512 char)
MIC_IMGCAM NUMBER <fk3>
MIC_RESTRI VARCHAR2(1 char)
MIC_ROL VARCHAR2(150 char)
MIC_SERSEL VARCHAR2(1024 char)
MIC_URLCAM VARCHAR2(512 char)
MIC_SEROFR VARCHAR2(1024 char)
MIC_CSS NUMBER <fk4>
MIC_CAB VARCHAR2(1 char)
MIC_PIE VARCHAR2(1 char)
MIC_NUMNOT NUMBER
MIC_BUSCA VARCHAR2(1 char)
MIC_CLAVE VARCHAR2(150 char) <ak1>
MIC_MNUCRP VARCHAR2(1 char)
MIC_CSSPTR VARCHAR2(1 char)
MIC_DOMINI VARCHAR2(150)
MIC_URI VARCHAR2(32 char) <ak2>
MIC_ANALYTICS VARCHAR2(60 char)
MIC_VERSION VARCHAR2(2)
MIC_TIPO_ACCESO VARCHAR2(1)
MIC_FTECOD NUMBER(19) <fk1>
MIC_DESARROLLO VARCHAR2(1)
GUS_MNUIDI
MDI_MNUCOD NUMBER <pk,fk1>
MDI_CODIDI VARCHAR2(6 char) <pk,fk2>
MDI_NOMBRE VARCHAR2(256 char)
GUS_IDIMIC
IMI_CODIDI VARCHAR2(6 char) <pk>
IMI_MICCOD NUMBER <pk,fk>
GUS_ACTIDI
ATI_CODIDI VARCHAR2(6 char) <pk,fk2>
ATI_ACTCOD NUMBER <pk,fk1>
ATI_NOMBRE VARCHAR2(150 char)
GUS_ACTIVI
ACT_CODI NUMBER <pk>
ACT_MICCOD NUMBER <fk>
GUS_FAQ
FAQ_CODI NUMBER <pk>
FAQ_MICCOD NUMBER <fk1>
FAQ_CODTEM NUMBER <fk2>
FAQ_FECHA DATE
FAQ_VISIB VARCHAR2(1 char)
GUS_TEMAS
TEM_CODI NUMBER <pk>
TEM_MICCOD NUMBER <fk>
GUS_MENU
MNU_CODI NUMBER <pk>
MNU_MICCOD NUMBER <fk1>
MNU_ORDEN NUMBER
MNU_IMGMEN NUMBER <fk2>
MNU_PADRE NUMBER
MNU_VISIB VARCHAR2(1 char)
MNU_MODO VARCHAR2(1 char)
GUS_AGEIDI
AID_CODIDI VARCHAR2(6 char) <pk,fk4>
AID_AGECOD NUMBER <pk,fk1>
AID_DESCRI VARCHAR2(4000 char)
AID_DOCU NUMBER <fk2>
AID_TITULO VARCHAR2(256 char)
AID_URL VARCHAR2(256 char)
AID_IMAGEN NUMBER <fk3>
AID_URLNOM VARCHAR2(512 char)
GUS_AGENDA
AGE_CODI NUMBER <pk>
AGE_MICCOD NUMBER <fk1>
AGE_ACTIVI NUMBER <fk2>
AGE_ORGANI VARCHAR2(256 char)
AGE_INICIO DATE
AGE_FIN DATE
AGE_VISIB VARCHAR2(1 char)
GUS_FAQIDI
FID_CODIDI VARCHAR2(6 char) <pk,fk2>
FID_FAQCOD NUMBER <pk,fk1>
FID_PREGUN VARCHAR2(1024 char)
FID_RESPU VARCHAR2(4000 char)
FID_URL VARCHAR2(1024 char)
FID_URLNOM VARCHAR2(512 char)
GUS_TEMIDI
TID_CODIDI VARCHAR2(6 char) <pk,fk2>
TID_TEMCOD NUMBER <pk,fk1>
TID_NOMBRE VARCHAR2(100 char)
GUS_CONTEN
CON_CODI NUMBER <pk>
CON_CADUCA DATE
CON_PUBLIC DATE
CON_VISIB VARCHAR2(1 char)
CON_ORDEN NUMBER
CON_MNUCOD NUMBER <fk2>
CON_IMGMEN NUMBER <fk3>
CON_PPLCOD NUMBER(19) <fk1>
GUS_FR_TEMA
FTE_CODI NUMBER(19) <pk>
FTE_VERSION VARCHAR2(2) <fk3>
FTE_TEMA_PADRE NUMBER(19) <fk2>
FTE_NOMBRE VARCHAR2(255) <ak1>
FTE_CSS NUMBER <fk1>
FTE_ACTUALIZACION DATE
FTE_URI VARCHAR2(32 char) <ak2>
GUS_NOTIDI
NID_CODIDI VARCHAR2(6 char) <pk,fk2>
NID_NOTCOD NUMBER <pk,fk1>
NID_TITULO VARCHAR2(512 char)
NID_SUBTIT VARCHAR2(256 char)
NID_FUENTE VARCHAR2(100 char)
NID_URL VARCHAR2(512 char)
NID_DOCU NUMBER <fk3>
NID_TEXTO CLOB
NID_URLNOM VARCHAR2(512 char)
NID_URI VARCHAR2(530 char)
GUS_NOTICS
NOT_CODI NUMBER <pk>
NOT_MICCOD NUMBER <fk1>
NOT_IMAGEN NUMBER <fk3>
NOT_CADUCA DATE
NOT_PUBLIC DATE
NOT_VISIB VARCHAR2(1 char)
NOT_VISWEB VARCHAR2(1 char)
NOT_TIPO NUMBER <fk2>
NOT_ORDEN NUMBER
GUS_CMPIDI
CPI_CODIDI VARCHAR2(6 char) <pk,fk2>
CPI_CMPCOD NUMBER <pk,fk1>
CPI_TITULO VARCHAR2(256 char)
GUS_CONIDI
CID_CODIDI VARCHAR2(6 char) <pk,fk2>
CID_CONCOD NUMBER <pk,fk1>
CID_TITULO VARCHAR2(256 char)
CID_TEXTO CLOB
CID_URL VARCHAR2(512 char)
CID_TXBETA CLOB
CID_URI VARCHAR2(270 char)
GUS_FR_VERSION
FVE_VERSION VARCHAR2(2) <pk>
FVE_NOMBRE VARCHAR2(255) <ak>
GUS_FR_ARCHIVO
ARC_CODI NUMBER <pk>
ARC_FTECOD NUMBER(19) <fk2>
ARC_PATH VARCHAR2(256 char)
ARC_DOCCOD NUMBER <fk1>
GUS_TPNOTI
TPN_CODI NUMBER
TPN_MICCOD NUMBER
TPN_TAMPAG NUMBER
TPN_TIPPAG VARCHAR2(1 char)
TPN_TPELEM VARCHAR2(1 char)
TPN_BUSCAR VARCHAR2(1 char)
TPN_ORDEN VARCHAR2(1 char)
TPN_XURL VARCHAR2(1000 cha
TPN_XJNDI VARCHAR2(500 char
TPN_XLOCAL VARCHAR2(1 char)
TPN_XAUTH VARCHAR2(1 char)
TPN_XUSR VARCHAR2(50 char)
TPN_XPWD VARCHAR2(50 char)
TPN_XID VARCHAR2(50 char)
TPN_CLASIF VARCHAR2(100 char
TPN_FOTOSPORFILA NUMBER
TPN_PPLCOD NUMBER(19)
GUS_FR_PLANTILLA
PLA_CODI NUMBER(19) <pk>
PLA_VERSION VARCHAR2(2) <fk>
PLA_NOMBRE VARCHAR2(255) <ak>
PLA_DESCRIPCION CLOB
PLA_TITULO VARCHAR2(255)
GUS_FR_PERPLA
PPL_CODI NUMBER(19) <pk>
PPL_TITULO VARCHAR2(255)
PPL_PLACOD NUMBER(19) <fk3>
PPL_ORDEN NUMBER
PPL_FTECOD NUMBER(19) <fk1>
PPL_MICCOD NUMBER <fk2>
PPL_CONTENIDO CLOB
GUS_COMPOS
CMP_CODI NUMBER <pk>
CMP_TIPO NUMBER <fk3>
CMP_MICCOD NUMBER <fk2>
CMP_NOMBRE VARCHAR2(256 char)
CMP_SOLOIM VARCHAR2(1 char)
CMP_NUMELE NUMBER
CMP_ORDEN NUMBER
CMP_IMGBUL NUMBER <fk4>
CMP_FILAS VARCHAR2(1 char)
CMP_PPLCOD NUMBER(19) <fk1>
GUS_TPNIDI
TPI_CODIDI VARCHAR2(6 char) <pk,fk2>
TPI_TIPCOD NUMBER <pk,fk1>
TPI_NOMBRE VARCHAR2(100 char)
TPI_URI VARCHAR2(125 char)