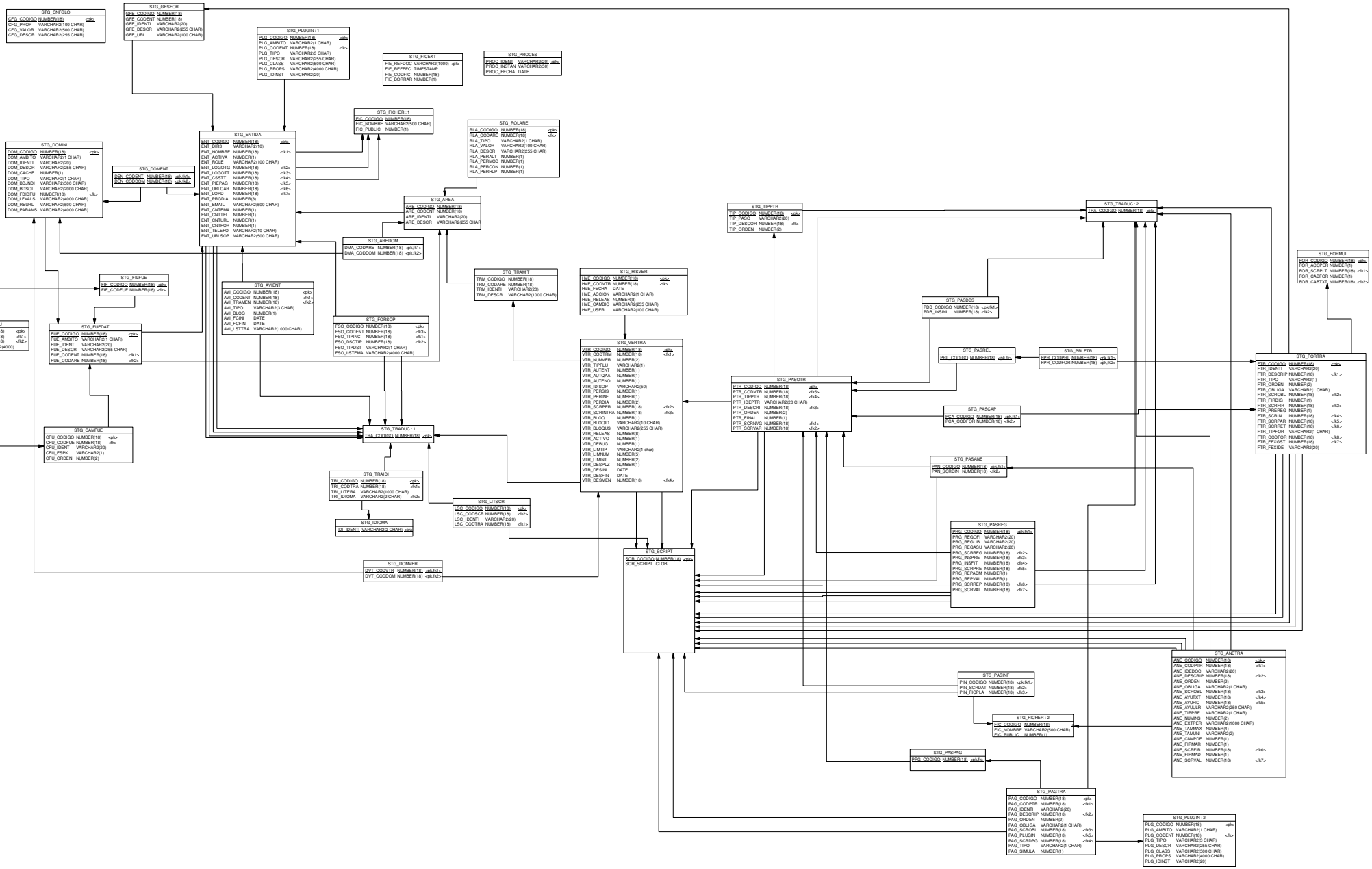
STG_CNFGLO
CFG_CODIGO NUMBER(18) <pk>
CFG_PROP VARCHAR2(100 CHAR)
CFG_VALOR VARCHAR2(500 CHAR)
CFG_DESCR VARCHAR2(255 CHAR)
STG_GESFOR
GFE_CODIGO NUMBER(18)
GFE_CODENT NUMBER(18)
GFE_IDENTI VARCHAR2(20)
GFE_DESCR VARCHAR2(255 CHAR)
GFE_URL VARCHAR2(100 CHAR)
STG_PLUGIN : 1
PLG_CODIGO NUMBER(18) <pk>
PLG_AMBITO VARCHAR2(1 CHAR)
PLG_CODENT NUMBER(18) <fk>
PLG_TIPO VARCHAR2(3 CHAR)
PLG_DESCR VARCHAR2(255 CHAR)
PLG_CLASS VARCHAR2(500 CHAR)
PLG_PROPS VARCHAR2(4000 CHAR)
PLG_IDINST VARCHAR2(20)
STG_FICEXT
FIE_REFDOC VARCHAR2(1000) <pk>
FIE_REFFEC TIMESTAMP
FIE_CODFIC NUMBER(18)
FIE_BORRAR NUMBER(1)
STG_PROCES
PROC_IDENT VARCHAR2(20) <pk>
PROC_INSTAN VARCHAR2(50)
PROC_FECHA DATE
STG_FICHER : 1
FIC_CODIGO NUMBER(18)
FIC_NOMBRE VARCHAR2(500 CHAR)
FIC_PUBLIC NUMBER(1)
STG_ROLARE
RLA_CODIGO NUMBER(18) <pk>
RLA_CODARE NUMBER(18) <fk>
RLA_TIPO VARCHAR2(1 CHAR)
RLA_VALOR VARCHAR2(100 CHAR)
RLA_DESCR VARCHAR2(255 CHAR)
RLA_PERALT NUMBER(1)
RLA_PERMOD NUMBER(1)
RLA_PERCON NUMBER(1)
RLA_PERHLP NUMBER(1)
STG_ENTIDA
ENT_CODIGO NUMBER(18) <pk>
ENT_DIR3 VARCHAR2(10)
ENT_NOMBRE NUMBER(18) <fk1>
ENT_ACTIVA NUMBER(1)
ENT_ROLE VARCHAR2(100 CHAR)
ENT_LOGOTG NUMBER(18) <fk2>
ENT_LOGOTT NUMBER(18) <fk3>
ENT_CSSTT NUMBER(18) <fk4>
ENT_PEPAG NUMBER(18) <fk5>
ENT_URLCAR NUMBER(18) <fk6>
ENT_LOPD NUMBER(18) <fk7>
ENT_PRGDIA NUMBER(3)
ENT_EMAIL VARCHAR2(500 CHAR)
ENT_CNTEMA NUMBER(1)
ENT_CNTTEL NUMBER(1)
ENT_CNTURL NUMBER(1)
ENT_CNTFOR NUMBER(1)
ENT_TELEFO VARCHAR2(10 CHAR)
ENT_URLSOP VARCHAR2(500 CHAR)
STG_DOMINI
DOM_CODIGO NUMBER(18) <pk>
DOM_AMBITO VARCHAR2(1 CHAR)
DOM_IDENTI VARCHAR2(20)
DOM_DESCR VARCHAR2(255 CHAR)
DOM_CACHE NUMBER(1)
DOM_TIPO VARCHAR2(1 CHAR)
DOM_BOUNDI VARCHAR2(500 CHAR)
DOM_BDSQL VARCHAR2(2000 CHAR)
DOM_FDIDFU NUMBER(18) <fk>
DOM_LFVALS VARCHAR2(4000 CHAR)
DOM_REURL VARCHAR2(500 CHAR)
DOM_PARAMS VARCHAR2(4000 CHAR)
STG_DOMENT
DEN_CODENT NUMBER(18) <pk,fk1>
DEN_CODDOM NUMBER(18) <pk,fk2>
STG_AREA
ARE_CODIGO NUMBER(18)
ARE_CODENT NUMBER(18)
ARE_IDENTI VARCHAR2(20)
ARE_DESCR VARCHAR2(255 CHAR)
STG_AREDOM
DMA_CODARE NUMBER(18) <pk,fk1>
DMA_CODDOM NUMBER(18) <pk,fk2>
STG_TIPPTR
TIP_CODIGO NUMBER(18) <pk>
TIP_PASO VARCHAR2(20)
TIP_DESCOR NUMBER(18) <fk>
TIP_ORDEN NUMBER(2)
STG_TRADUC : 2
TRA_CODIGO NUMBER(18) <pk>
STG_FORMUL
FOR_CODIGO NUMBER(18) <pk>
FOR_ACCPER NUMBER(1)
FOR_SCRPLT NUMBER(18) <fk1>
FOR_CABFOR NUMBER(1)
FOR_CABTXT NUMBER(18) <fk2>
STG_FILFUE
FIF_CODIGO NUMBER(18) <pk>
FIF_CODFUE NUMBER(18) <fk>
STG_AVIENT
AVI_CODIGO NUMBER(18) <pk>
AVI_CODENT NUMBER(18) <fk1>
AVI_TRAMEN NUMBER(18) <fk2>
AVI_TIPO VARCHAR2(3 CHAR)
AVI_BLOQ NUMBER(1)
AVI_FCINI DATE
AVI_FCFIN DATE
AVI_LSTTRA VARCHAR2(1000 CHAR)
STG_TRAMIT
TRM_CODIGO NUMBER(18)
TRM_CODARE NUMBER(18)
TRM_IDENTI VARCHAR2(20)
TRM_DESCR VARCHAR2(1000 CHAR)
STG_HSVER
HVE_CODIGO NUMBER(18) <pk>
HVE_CODVTR NUMBER(18) <fk>
HVE_FECHA DATE
HVE_ACCION VARCHAR2(1 CHAR)
HVE_RELEAS NUMBER(8)
HVE_CAMBIO VARCHAR2(255 CHAR)
HVE_USER VARCHAR2(100 CHAR)
STG_PASDBS
PDB_CODIGO NUMBER(18) <pk,fk1>
PDB_INSINI NUMBER(18) <fk2>
STG_VALCFU
VCF_CODIGO NUMBER(18) <pk>
VCF_CODFIF NUMBER(18) <fk1>
VCF_CODCFU NUMBER(18) <fk2>
VCF_VALOR VARCHAR2(4000)
STG_FUEDAT
FUE_CODIGO NUMBER(18) <pk>
FUE_AMBITO VARCHAR2(1 CHAR)
FUE_IDENT VARCHAR2(20)
FUE_DESCR VARCHAR2(255 CHAR)
FUE_CODENT NUMBER(18) <fk1>
FUE_CODARE NUMBER(18) <fk2>
STG_FORSOP
FSO_CODIGO NUMBER(18) <pk>
FSO_CODENT NUMBER(18) <fk3>
FSO_TIPINC NUMBER(18) <fk1>
FSO_DSCTIP NUMBER(18) <fk2>
FSO_TIPDST VARCHAR2(1 CHAR)
FSO_LSTEMA VARCHAR2(4000 CHAR)
STG_VERTRA
VTR_CODIGO NUMBER(18) <pk>
VTR_CODTRM NUMBER(18) <fk1>
VTR_NUMVER NUMBER(2)
VTR_TIPFLU VARCHAR2(1)
VTR_AUTENT NUMBER(1)
VTR_AUTQAA NUMBER(1)
VTR_AUTENO NUMBER(1)
VTR_IDSOP VARCHAR2(50)
VTR_PERSIS NUMBER(1)
VTR_PERINF NUMBER(1)
VTR_PERDIA NUMBER(2)
VTR_SCRPER NUMBER(18) <fk2>
VTR_SCRINTRA NUMBER(18) <fk3>
VTR_BLOQ NUMBER(1)
VTR_BLOQID VARCHAR2(10 CHAR)
VTR_BLOQUE VARCHAR2(255 CHAR)
VTR_RELEAS NUMBER(8)
VTR_ACTIVO NUMBER(1)
VTR_DEBUG NUMBER(1)
VTR_LIMTIP VARCHAR2(char)
VTR_LIMNUM NUMBER(5)
VTR_LIMINT NUMBER(2)
VTR_DESPLZ NUMBER(1)
VTR_DESINI DATE
VTR_DESFIN DATE
VTR_DESMEN NUMBER(18) <fk4>
STG_PASOTR
PTR_CODIGO NUMBER(18) <pk>
PTR_CODVTR NUMBER(18) <fk5>
PTR_TIPPTR NUMBER(18) <fk4>
PTR_IDEPTR VARCHAR2(20 CHAR)
PTR_DESCRI NUMBER(18) <fk3>
PTR_ORDEN NUMBER(2)
PTR_FINAL NUMBER(1)
PTR_SCRNVG NUMBER(18) <fk1>
PTR_SCRVAR NUMBER(18) <fk2>
STG_PASREL
PRL_CODIGO NUMBER(18) <pk,fk>
STG_PRLFTR
FPR_CODPRL NUMBER(18) <pk,fk1>
FPR_CODFOR NUMBER(18) <pk,fk2>
STG_FORTRA
FTR_CODIGO NUMBER(18) <pk>
FTR_IDENTI VARCHAR2(20)
FTR_DESCRIP NUMBER(18) <fk1>
FTR_TIPO VARCHAR2(1)
FTR_ORDEN NUMBER(2)
FTR_OBLIGA VARCHAR2(1 CHAR)
FTR_SCROBL NUMBER(18) <fk2>
FTR_FIRDIG NUMBER(1)
FTR_SCRFIR NUMBER(18) <fk3>
FTR_PREREQ NUMBER(1)
FTR_SCRINI NUMBER(18) <fk4>
FTR_SCRPAR NUMBER(18) <fk5>
FTR_SCRRET NUMBER(18) <fk6>
FTR_TIPFOR VARCHAR2(1 CHAR)
FTR_CODFOR NUMBER(18) <fk8>
FTR_FEXGST NUMBER(18) <fk7>
FTR_FEXIDE VARCHAR2(20)
STG_PASCAP
PCA_CODIGO NUMBER(18) <pk,fk1>
PCA_CODFOR NUMBER(18) <fk2>
STG_PASANE
PAN_CODIGO NUMBER(18) <pk,fk1>
PAN_SCRDIN NUMBER(18) <fk2>
STG_CAMFUE
CFU_CODIGO NUMBER(18) <pk>
CFU_CODFUE NUMBER(18) <fk>
CFU_IDENT VARCHAR2(20)
CFU_ESPK VARCHAR2(1)
CFU_ORDEN NUMBER(2)
STG_TRAIDI
TRI_CODIGO NUMBER(18) <pk>
TRI_CODTRA NUMBER(18) <fk1>
TRI_LITERA VARCHAR2(1000 CHAR)
TRI_IDIOMA VARCHAR2(2 CHAR) <fk2>
STG_LITSCR
LSC_CODIGO NUMBER(18) <pk>
LSC_CODSCR NUMBER(18) <fk2>
LSC_IDENTI VARCHAR2(20)
LSC_CODTRA NUMBER(18) <fk1>
STG_IDIOMA
IDI_IDENTI VARCHAR2(2 CHAR) <pk>
STG_PASREG
PRG_CODIGO NUMBER(18) <pk,fk1>
PRG_REGCFI VARCHAR2(20)
PRG_REGLIB VARCHAR2(20)
PRG_REGASU VARCHAR2(20)
PRG_SCRREG NUMBER(18) <fk2>
PRG_INSPRE NUMBER(18) <fk3>
PRG_INSFIT NUMBER(18) <fk4>
PRG_SCRPRE NUMBER(18) <fk5>
PRG_REPADM NUMBER(1)
PRG_REPVAL NUMBER(1)
PRG_SCRREP NUMBER(18) <fk6>
PRG_SCRVAL NUMBER(18) <fk7>
STG_SCRIPT
SCR_CODIGO NUMBER(18) <pk>
SCR_SCRIPT CLOB
STG_DOMVER
DVT_CODVTR NUMBER(18) <pk,fk1>
DVT_CODDOM NUMBER(18) <pk,fk2>
STG_ANETRA
ANE_CODIGO NUMBER(18) <pk>
ANE_CODPTR NUMBER(18) <fk1>
ANE_IDEDOC VARCHAR2(20)
ANE_DESCRIP NUMBER(18) <fk2>
ANE_ORDEN NUMBER(2)
ANE_OBLIGA VARCHAR2(1 CHAR)
ANE_SCROBL NUMBER(18) <fk3>
ANE_AYUTXT NUMBER(18) <fk4>
ANE_AYUFIC NUMBER(18) <fk5>
ANE_AYUILR VARCHAR2(250 CHAR)
ANE_TIPPRE VARCHAR2(1 CHAR)
ANE_NUMINS NUMBER(2)
ANE_EXTPER VARCHAR2(1000 CHAR)
ANE_TAMMAX NUMBER(4)
ANE_TAMUNI VARCHAR2(2)
ANE_CNVPDF NUMBER(1)
ANE_FIRMAR NUMBER(1)
ANE_SCRFIR NUMBER(18) <fk6>
ANE_FIRMAD NUMBER(1)
ANE_SCRVAL NUMBER(18) <fk7>
STG_PASINF
PIN_CODIGO NUMBER(18) <pk,fk1>
PIN_SCRDAT NUMBER(18) <fk2>
PIN_FICPLA NUMBER(18) <fk3>
STG_FICHER : 2
FIC_CODIGO NUMBER(18)
FIC_NOMBRE VARCHAR2(500 CHAR)
FIC_PUBLIC NUMBER(1)
STG_PASPAG
PPG_CODIGO NUMBER(18) <pk,fk>
STG_PAGTRA
PAG_CODIGO NUMBER(18) <pk>
PAG_CODPTR NUMBER(18) <fk1>
PAG_IDENTI VARCHAR2(20)
PAG_DESCRIP NUMBER(18) <fk2>
PAG_ORDEN NUMBER(2)
PAG_OBLIGA VARCHAR2(1 CHAR)
PAG_SCROBL NUMBER(18) <fk3>
PAG_PLUGIN NUMBER(18) <fk5>
PAG_SCRDPG NUMBER(18) <fk4>
PAG_TIPO VARCHAR2(1 CHAR)
PAG_SIMULA NUMBER(1)
STG_PLUGIN : 2
PLG_CODIGO NUMBER(18) <pk>
PLG_AMBITO VARCHAR2(1 CHAR)
PLG_CODENT NUMBER(18) <fk>
PLG_TIPO VARCHAR2(3 CHAR)
PLG_DESCR VARCHAR2(255 CHAR)
PLG_CLASS VARCHAR2(500 CHAR)
PLG_PROPS VARCHAR2(4000 CHAR)
PLG_IDINST VARCHAR2(20)