BASIC MULTIDISCIPLINARY PROJECT

Firefly

Registration No.	25BME1041
Institution	VIT Chennai
Programme	B.Tech – Mechanical Engineering
Academic Year	2025 – 2026
Name	A AKHAASH

1. Project Overview

This document presents the complete design documentation for a compact fire sensor detector enclosure developed as part of the Basic Multidisciplinary Project at VIT Chennai. The enclosure is designed to house a multi-sensor fire detection system built around an Arduino microcontroller, integrating temperature, smoke, motion, sound and gas sensors to achieve reliable early fire detection.

The design objective was to develop a mechanically sound, thermally transparent, and electromagnetically compatible housing that does not impede sensor performance while providing adequate protection to the internal electronics.

2. Enclosure Design Description

The enclosure is modelled as a two-part assembly in SolidWorks: a rectangular base body and a ventilated lid. The overall outer footprint is 176 mm (L) x 80 mm (W) x 16 mm (H) for the body, with the lid adding approximately 5 mm in height. The assembly is compact enough for wall mounting or desktop placement while providing sufficient internal volume for the Arduino and sensor modules.

2.1 Orthographic and Isometric Views

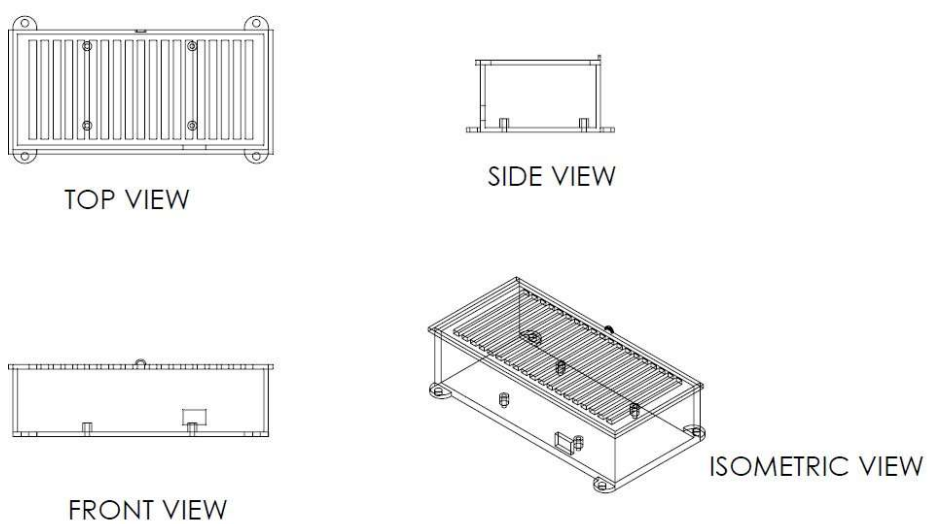

Fig. 1 — Top, Front, Side, and Isometric views of the complete enclosure assembly

The orthographic projections confirm the rectangular profile with flush-fit lid. The isometric view clearly illustrates the ventilation grille geometry on the lid surface and the four corner mounting flanges with through-holes for M3 screws. The front view reveals the USB/power connector cutout on the front face of the base body.

2.2 Dimensioned Engineering Drawing

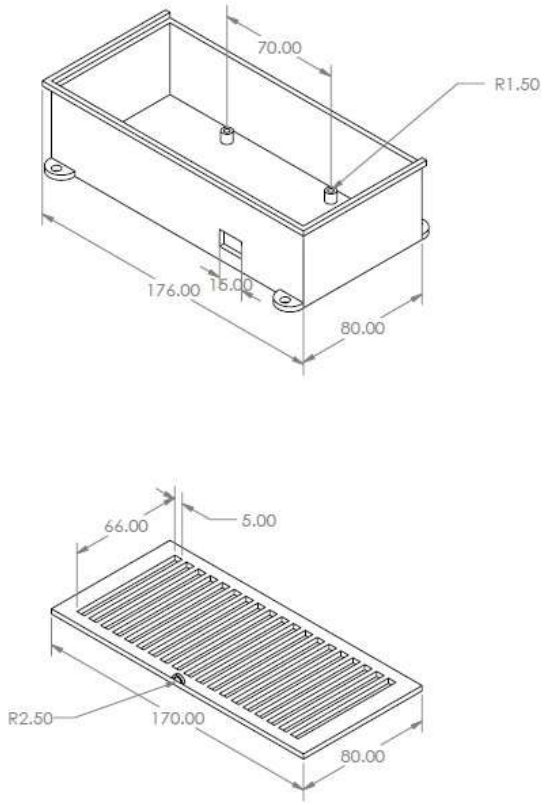

Fig. 2 — Dimensioned isometric views of the base body (top) and ventilated lid (bottom) with all key dimensions

2.3 Key Dimensions

Dimension / Feature	Value
Base body outer length	176 mm
Base body outer width	80 mm
Base body height	16 mm
Lid outer length	170 mm
Lid outer width	80 mm (same as body)
Lid rib thickness	5 mm
Corner fillet radius – body	R1.50 mm

Corner fillet radius – lid	R2.50 mm
Standoff boss diameter	~6 mm (M3)
Front panel cutout (USB/DC jack)	Rectangular, centred on front face

2.4 Exploded / Transparent Assembly View

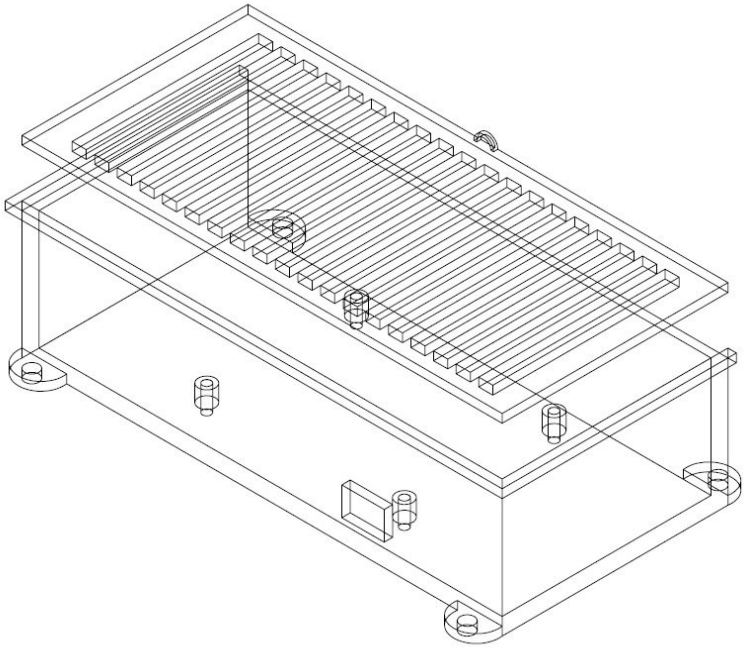

Fig. 3 — Transparent isometric view showing the lid lifted from the base body, revealing internal standoff bosses, sensor mounting points, and the front panel cutout

The transparent view clearly shows how the lid sits on top of the base body and is secured by four M3 screws at the corner flanges. The interior standoff bosses visible on the base floor provide elevated mounting platforms for the Arduino and sensor PCBs, preventing direct contact with the enclosure floor and allowing airflow beneath the boards.

3. Design Justification for Fire Sensor Enclosure

The choice of this particular enclosure geometry and feature set is not arbitrary. Each design element has been selected specifically to support accurate, reliable operation of the fire detection sensors housed within. The following subsections justify each major design decision.

3.1 Ventilated Lid with Parallel Rib Grille

The most prominent feature of this enclosure is the parallel-rib ventilation grille machined into the lid. This is the single most critical design choice for a fire sensor application, for the following reasons:

- Gas and smoke sensors (MQ-2, MQ-135) require the ambient air surrounding the sensing element to reflect true environmental conditions. A sealed enclosure would trap stale air and cause delayed, inaccurate responses. The grille slots provide a large open area for free convection to bring fresh ambient air into contact with the sensor surface.
- Heat and convective currents from a fire rise naturally upward. Placing the ventilation on the top surface (lid) ensures that hot air and combustion gases enter the enclosure from above — the exact direction from which a ceiling-mounted or desktop unit would receive them first.
- The rib geometry (narrow parallel slots rather than a single large opening) balances openness with mechanical stiffness. The ribs preserve the structural integrity of the lid while still achieving a high open-area ratio for airflow.
- IR flame sensors require an unobstructed line-of-sight to detect flame radiation. The slot geometry of the grille allows infrared radiation at relevant wavelengths (~760–1100 nm) to pass through without significant attenuation, provided the material is transparent or minimally reflective in that band.

3.2 Corner Fillets (R1.5 mm on Body, R2.5 mm on Lid)

- Fillets eliminate stress concentration points, preventing crack initiation at sharp internal corners during handling or if the unit is dropped.
- In moulded or 3D-printed parts, sharp internal corners are manufacturing defects. The R2.5 fillet on the lid specifically accommodates the slightly thicker lid wall, maintaining a consistent wall-to-fillet ratio.
- Rounded exterior corners improve ergonomics and reduce damage to surrounding surfaces.

3.3 Standoff Bosses for PCB Mounting

- The four internal cylindrical standoff bosses raise the Arduino PCB and sensor boards approximately 3–5 mm above the enclosure floor. This is essential for two reasons: it prevents solder joints and component leads on the board underside from shorting against the enclosure wall (critical if a conductive material like aluminium is used), and it creates an air gap beneath the board, improving thermal management.

- Standoff-mounted PCBs also resist vibration better than adhesive-mounted boards, which is relevant for installations near HVAC units, industrial machinery, or transportation applications.

3.4 Front Panel Cutout for Connector Access

- The rectangular cutout on the front face of the base body provides access to the USB or DC barrel jack power connector without requiring the enclosure to be opened. This is important for a deployed fire detector, which must remain powered and sealed during normal operation.
- The cutout is sized to accommodate a USB Type-B or standard 5.5 mm DC barrel jack, which are the most common power interfaces for Arduino-based systems.

3.5 Corner Flange Mounting Holes

- The four mounting flanges with through-holes allow the enclosure to be bolted to a wall bracket, ceiling plate, or desktop stand. A bolted, rigid mounting ensures the enclosure orientation is fixed, which is critical for directional sensors such as the IR flame detector, which has a defined field-of-view cone.
- M3 fasteners at the corners distribute the mounting load symmetrically across the enclosure, preventing warping over time.

3.6 Overall Compact Form Factor (176 x 80 x ~21 mm assembled)

- The compact profile minimises thermal mass, meaning the internal air temperature of the enclosure tracks the ambient temperature more closely and rapidly. This is desirable for a fire detector — a large, thermally massive enclosure would dampen the temperature rise signal received by the DHT sensor.
- The low profile makes the enclosure unobtrusive for installation in residential, commercial, or laboratory environments.

4. Material Selection for Accurate Sensor Readings

Material selection for a fire sensor enclosure is not merely a structural decision — it directly governs sensor performance. The ideal material must balance mechanical protection with optical, thermal, and electromagnetic transparency. The table below evaluates candidate materials against criteria relevant to the sensors housed within this unit.

Material	Key Properties Relevant to Fire Detection	Suitability
ABS Plastic	Low thermal conductivity, electrically insulating, easy to 3D print/injection mould, non-magnetic (no EMI shielding). Softens at ~105 °C — adequate for detection-range temperatures but not fire-adjacent use. Translucent to IR at thin sections.	**Recommended**
Polycarbonate (PC)	High impact strength, good dimensional stability, transparent to visible and near-IR. Higher heat resistance than ABS (~120–130 °C). Electrically insulating, no EMI shielding. Ideal if optical clarity for IR sensor is prioritised.	**Recommended**
PLA (3D Print)	Easy to print, biodegradable, low cost. Very low heat distortion temperature (~60 °C) — unsuitable for environments where the enclosure itself may be exposed to elevated temperatures in a fire event.	**Not Recommended**
Aluminium Alloy	Excellent thermal conductivity equalises internal temperature rapidly, good mechanical strength, electrically conductive (acts as EMI shield, reducing EM noise from RF sources). However, a conductive enclosure can attenuate radio signals and must be electrically isolated from PCB.	**Suitable**
Mild Steel / Sheet Metal	High EMI shielding, strong, low cost for mass production. Heavy, corrosion prone unless coated. High thermal conductivity — good for temperature uniformity inside. May interfere with RF-based alerting modules.	**Suitable**
PETG (3D Print)	Better heat resistance than PLA (~80 °C HDT), food-safe, low moisture absorption, good layer adhesion. Electrically insulating. Good compromise for rapid prototyping when ABS warping is a problem.	**Suitable**

4.1 Recommended Material: ABS Plastic or Polycarbonate (PC)

For this specific fire sensor detector application, ABS or Polycarbonate is recommended as the primary enclosure material, for the following detailed reasons:

Thermal Transparency

- Gas sensors (MQ-2, MQ-135) do not measure temperature directly, but their sensitivity curves are temperature-dependent. A low-conductivity plastic enclosure allows the internal temperature to track ambient conditions through convection via the grille, rather than conducting heat from the enclosure walls. This avoids sensor drift caused by locally elevated wall temperatures.
- The DHT11/DHT22 temperature sensor requires the internal air to equilibrate with the external environment. Plastic's low thermal mass and conductivity ensure the internal air is not artificially heated or cooled by the enclosure material itself, unlike an aluminium housing which would act as a heat sink and distort readings at low ambient temperatures.

Electromagnetic Compatibility (EMC)

- MQ-series gas sensors are resistive transducers sensitive to voltage noise. An ungrounded metallic enclosure can act as an antenna, picking up RF interference and introducing noise into sensor readings. A plastic (non-conductive) enclosure eliminates this issue entirely without requiring additional grounding provisions.
- If wireless communication (Bluetooth, Wi-Fi via ESP module) is added to the Arduino system, a plastic enclosure does not attenuate the radio signal, maintaining wireless connectivity range.

Infrared Transmissivity

- The IR flame sensor detects radiation in the 760–1100 nm band. Most plastics, including ABS and PC, are partially transparent in the near-IR spectrum. This means even without a direct open grille slot in the optical path, the IR signal can penetrate a thin plastic wall (~1–2 mm) with moderate attenuation. Aluminium and steel are completely opaque to IR, making them unsuitable unless a dedicated optical window is added.
- Polycarbonate in particular has excellent near-IR transmittance (>85% for 3 mm thickness at 850 nm), making it the superior choice if the IR sensor is not directly exposed through the grille slots.

Manufacturing and Repeatability

- ABS is the standard material for Arduino project enclosures due to its ease of FDM 3D printing, injection moulding compatibility, and post-processing (sanding, painting, chemical smoothing). For a laboratory prototype, FDM-printed ABS matches the SolidWorks model geometry accurately.
- PC is preferred when dimensional accuracy and optical clarity are critical, and is available in sheet form for CNC-machined lids, which would achieve smoother grille slot edges than FDM printing.

4.2 Surface Finish Recommendation

- Matte black surface finish (paint or filament colour): reduces reflection of ambient light onto the IR sensor photodiode, improving SNR for flame detection.

- nternal surfaces should not be mirror-polished metallic — specular reflection inside the enclosure can create false positive responses in the IR sensor from LED indicators or ambient light entering through the grille.
- External surfaces may be coated with a thin flame-retardant lacquer to comply with UL94 V-0 flammability requirements for electrical enclosures.