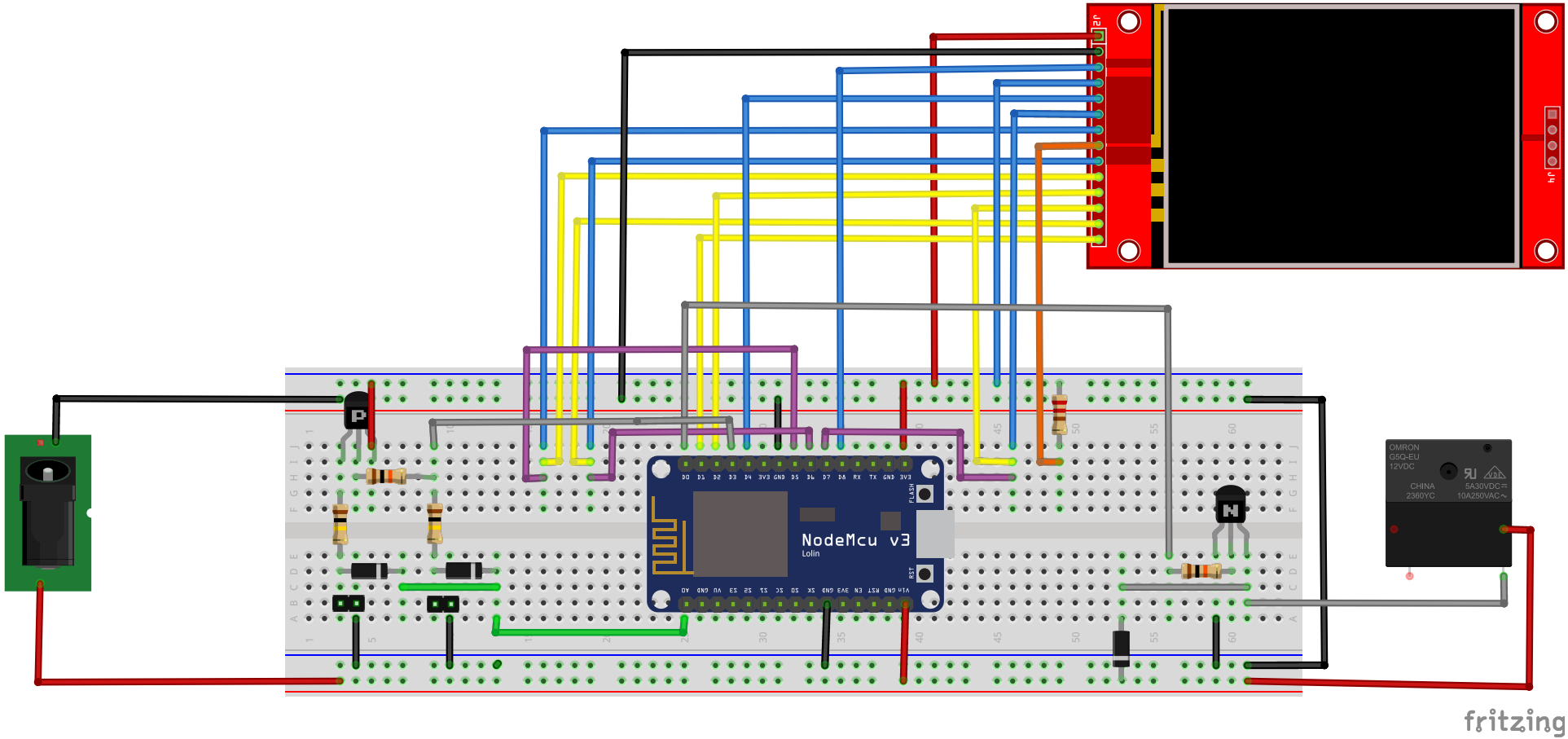
NodeMcu v3
Lolin
OMRON
G5Q-EU
12VDC
CHINA
2360YC
5A30VDC
10A250VAC
fritzing