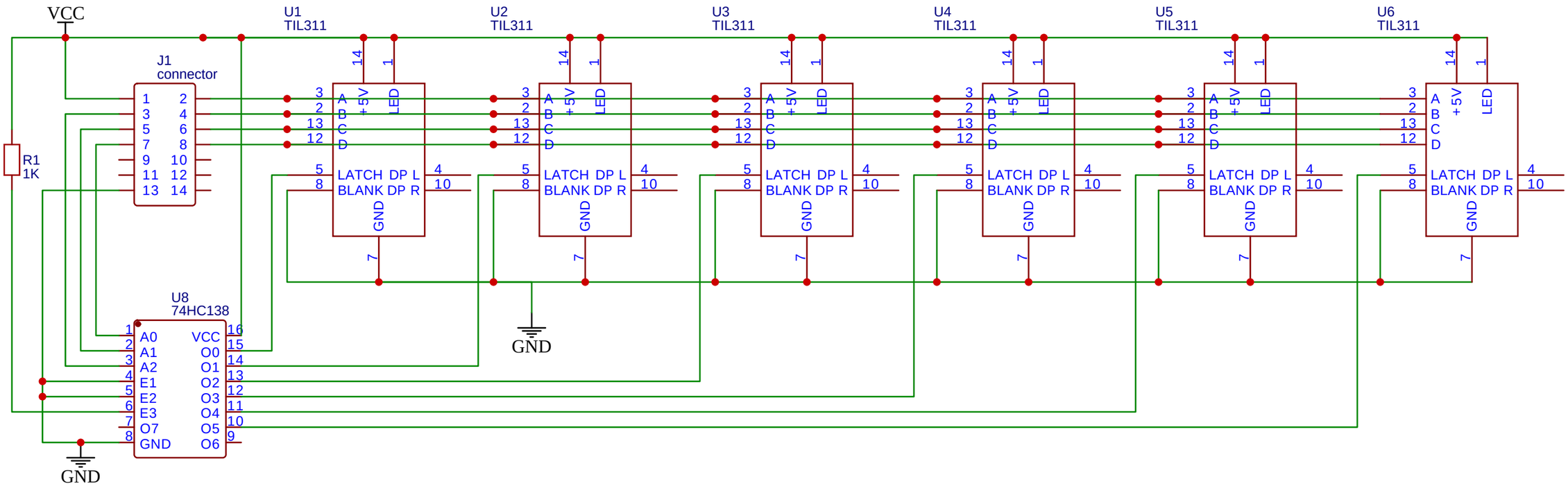


| | | |
|---|---|---|
| TITLE: CPU Display | | REV: 1.0 |
| EasyEDA | Company: NI Robotics | Sheet: 1/1 |
| | Date: 2020-01-13 Drawn By: johntkennedy | |