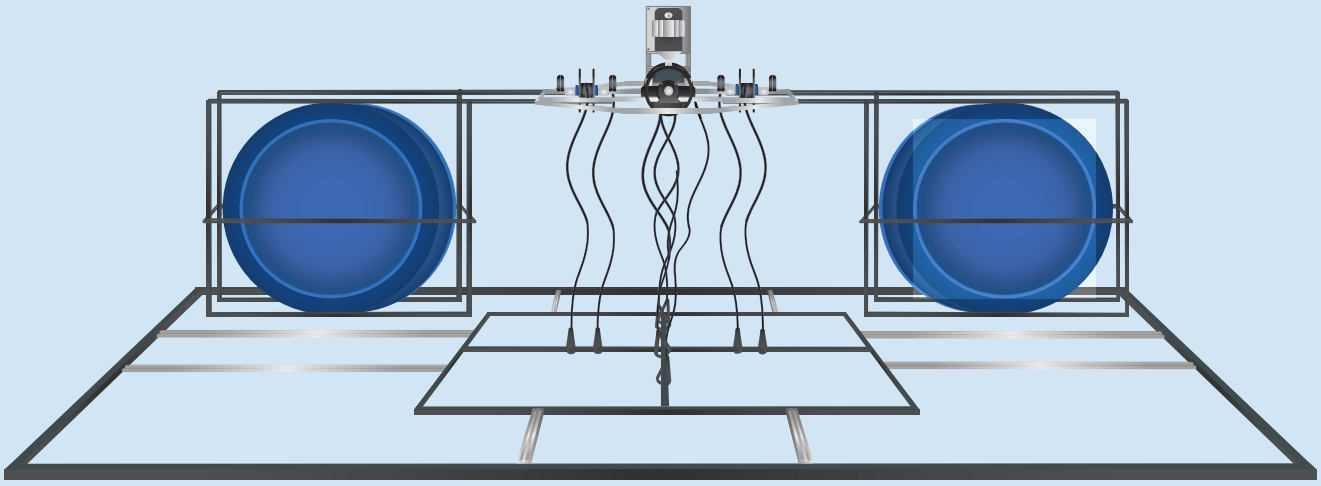

Bariflolabs™

AERATION DEVICE MANUAL

INVENTORY LIST

MATERIAL LIST			Quantity
1.	Gear box		
		main input shaft	1 nos
		main input bush	1nos
		pinion input shaft hole & tap	4 nos
		output shaft	4 nos
		grease	0.5 kg
2.	Transmission		
		Aluminum shaft	4 nos
		Pulley wheel	4 nos
		belts 5m	4 nos
		SUPPORTING BELT4.5M	4 nos
		pulley wheel side clamp	8 nos
		shaft bearing	8 nos
3.	Structural Items		
		Top frame	1 nos
		DRUM FRAME 20X20 SQR PIPE	31 mtr
		1.5X1.5MBase frame MS 20X20 SQR PIPE	6 mtr
		3X3M Base frame MS 20X20 SQR PIPE	18 mtr
		1.5X1.5M Base frame PVC	6 mtr
		Al profile rod connector	
		Motor stand	1 nos
		200 LTR PLASTIC DRUM	2 nos
4.	Pneumatic Items		
		10 mm pipe	50 mtr
		12 mm pipe	2 mtr
		16mm pipe	4 mtr
		10 mm spring pipe	1 nos
		3 way connector 16x16x12 mm	4 nos
		3 way connector 12x12x10 mm	2 nos
		3 way connector 10x10x10 mm	1 nos
		2 way connector 10x10 mm	1 nos
		Porous pipe	2 mtr
		compressor L connector 10 mm	1 nos
		Pneumatic connector with compressor 10 mm	1 nos
5.	Accessories		
		2 inch ss 6 mm dia Nut and bolt	40 nos
		1.5 inch ss 6 mm dia Nut and bolt	15 nos
		1 inch ss 6 mm dia Nut and bolt LN key head	6 nos
		1.5 inch ss 4 mm dia Nut and Bolt	4 nos
		1 inch ss 3 mm dia Nut and Bolt	12 nos
		washer 6 mm id	16 nos
		washer 4 mm id	8 nos
		washer 3 mm id	12 nos
		plastic zip tie	12 nos
		metal zip tie	12 nos
		3 INCH 6 MM DIA NUT & BOLT(SS)	150 nos
		3 INCH 6 MM DIA NUT & BOLT(GI)	150 nos

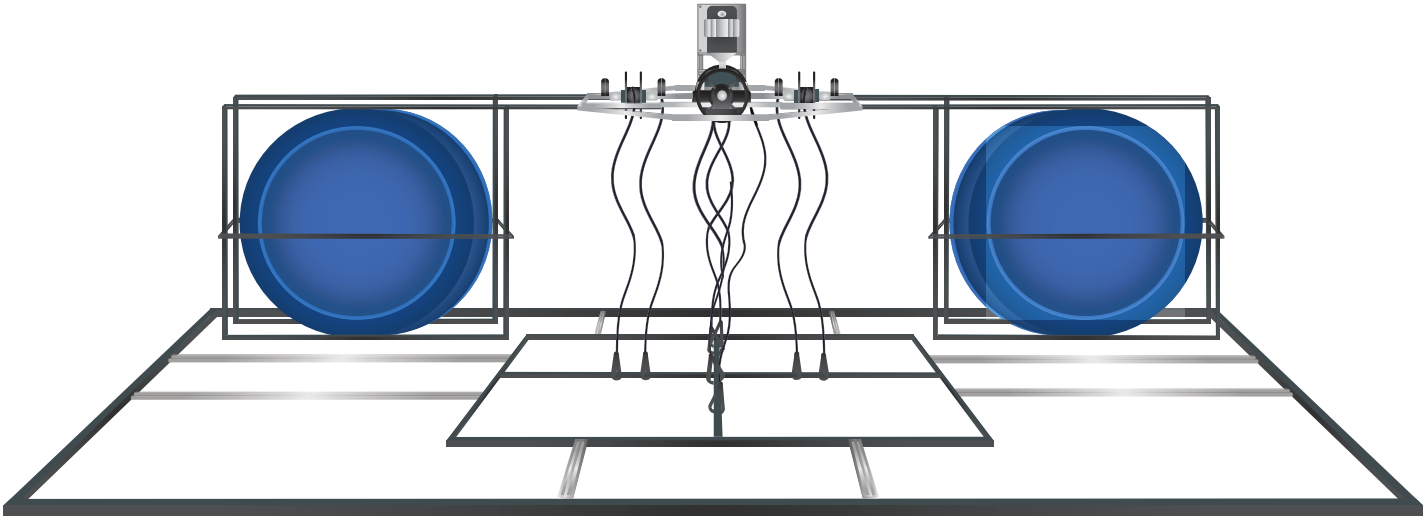

AERATION DEVICE

GEAR BOX

Gear Box Assembling Parts:

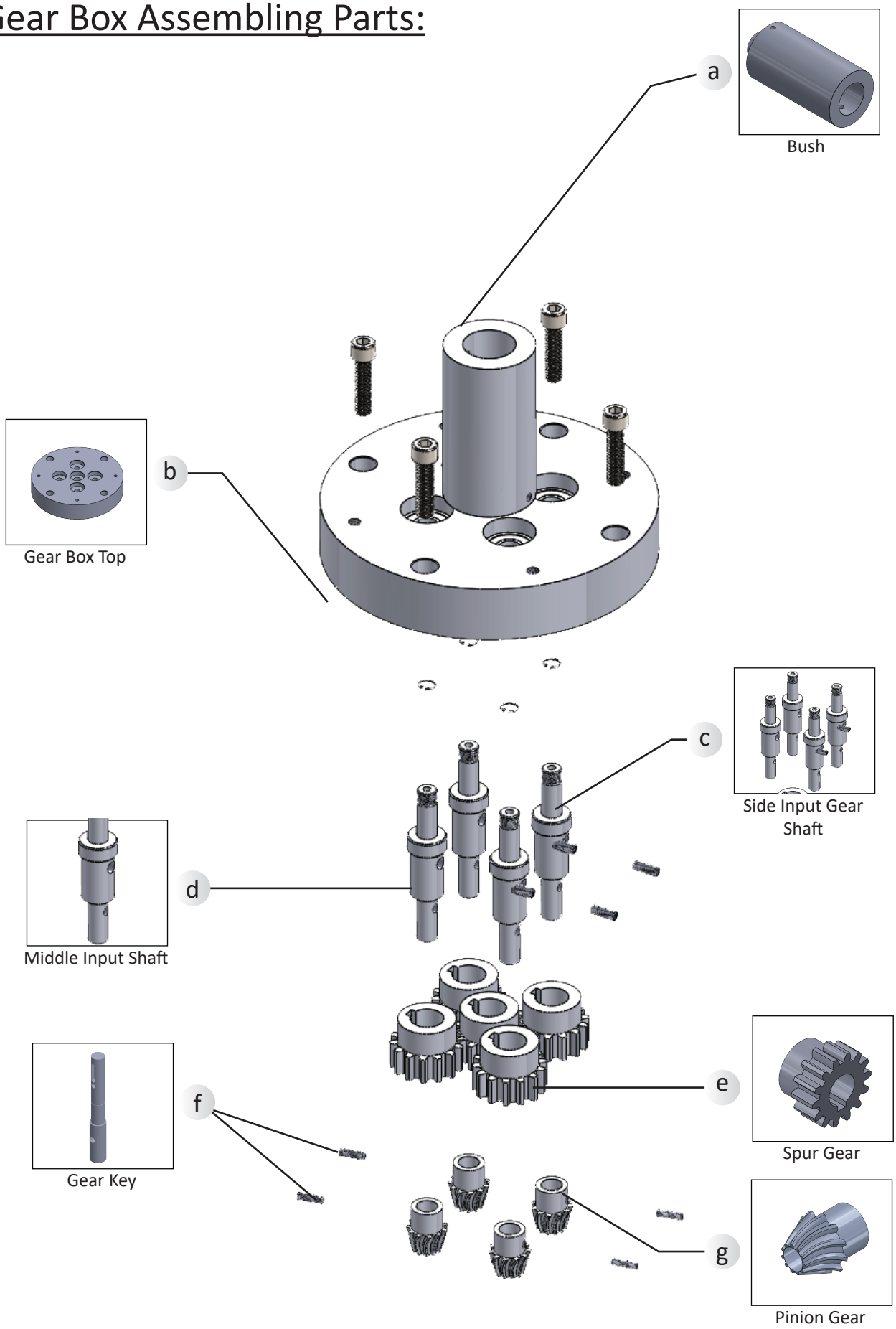

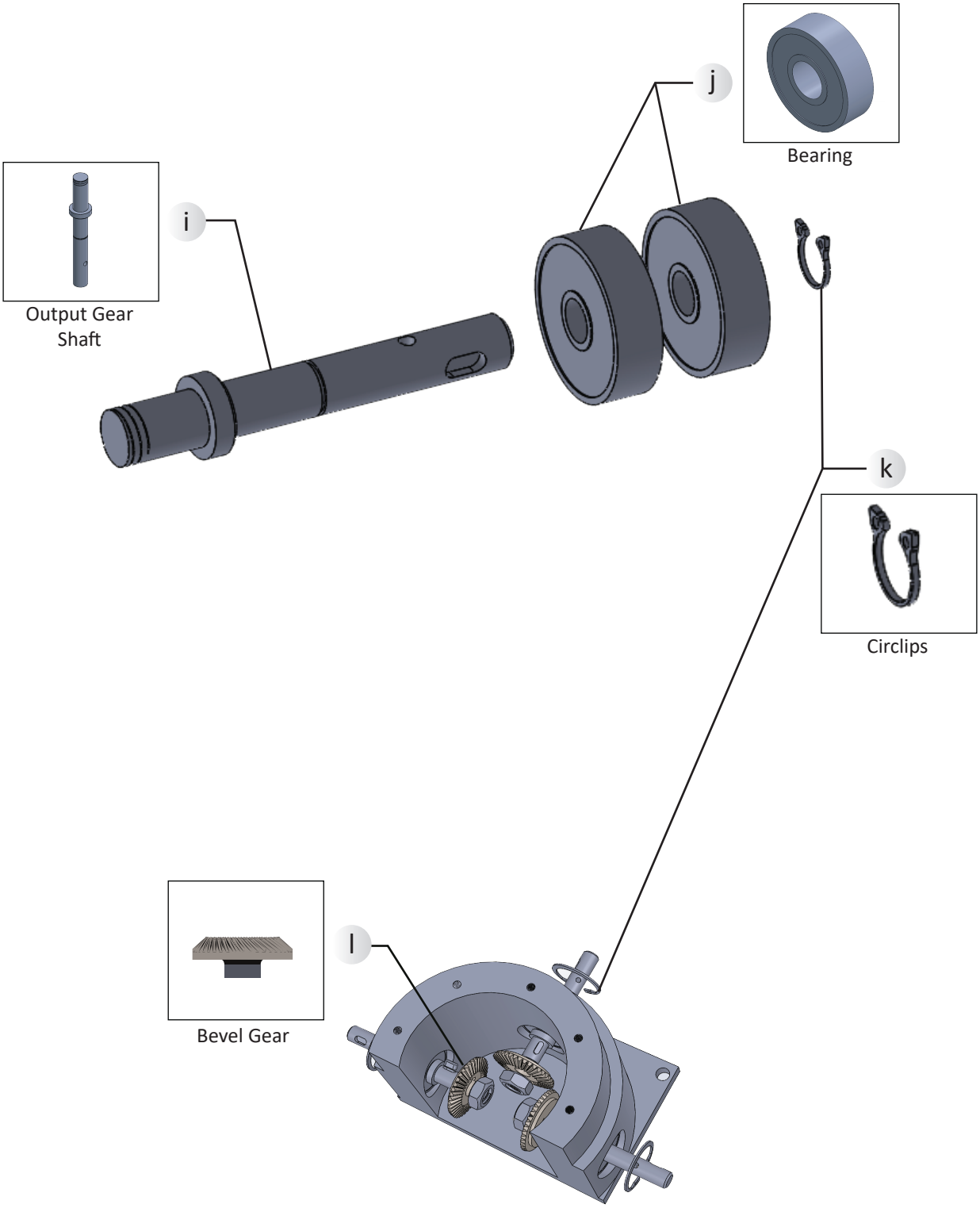
j
Bearing
i
Output Gear
Shaft
k
Circlips
l
Bevel Gear

Steps for Assembling:

1) BASE PART:

- First set the output shaft in bearing with the help of soft hammer and 11mm dia through hole bush (bush for hammering the bearing) , then lock the small circlip in position on output shaft.

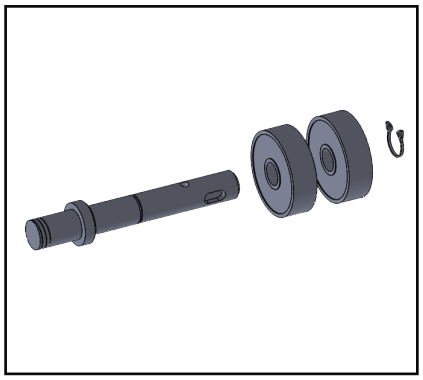

Fig:1 Preassembled Output Shaft& Bearing

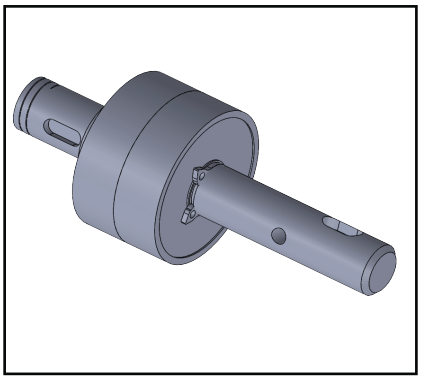

Fig:2 Assembled Output Shaft& Bearing

- Then set the key with the key way of output shaft to stop the axel rotation of bevel gear which act on rotating with output shaft.

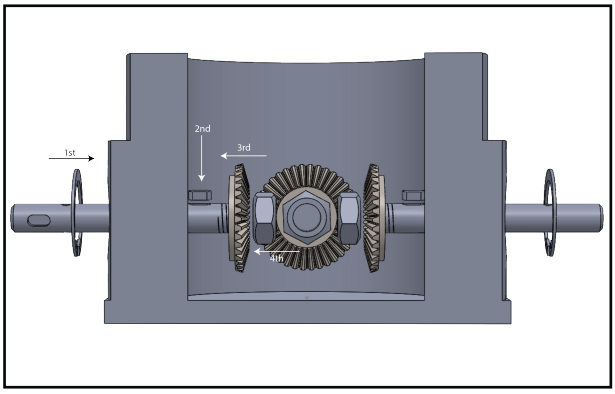

Fig:3 Front View

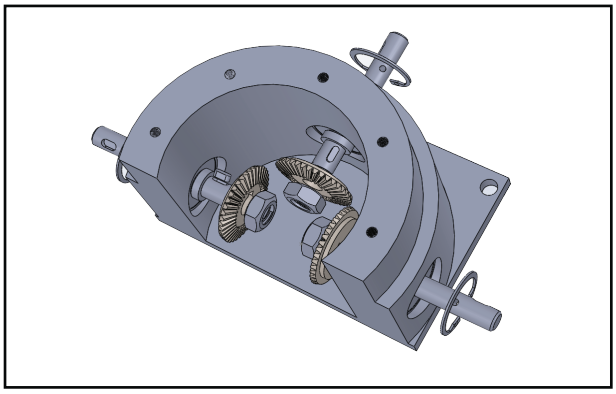

Fig:4 Isometric View

- Then attach the nut on thread position at output shaft for locking the linear motion of Bevel gear.

**** Check that all the shaft have equal distance to maintain an angle of 90° with the Pinion gear.***

2) TOP HALF:

- First put the middle input shaft in th middle bearing with the help of mallet hammer. It is done by indirectly setting a solid cylinder on the input shaft and fitting the (AL) cylinder part for pushing the shaft in bearing with the hammer.

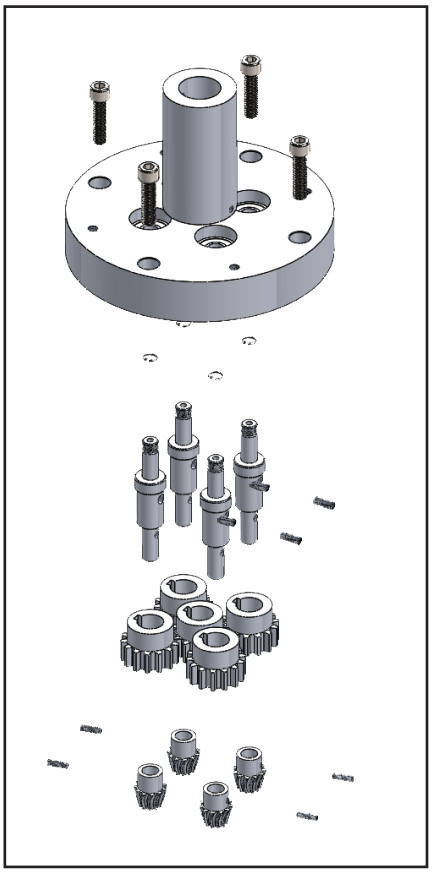

Fig: 5 Cover Part Preassembled

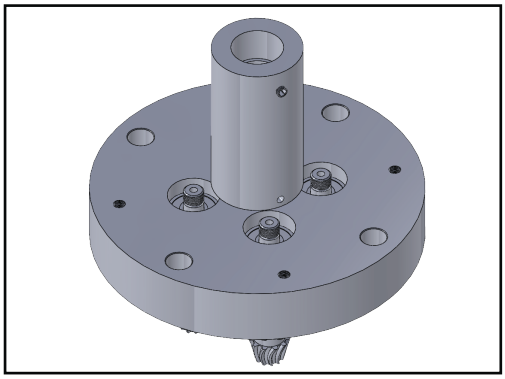

Fig: 6 Cover Part Preassembled (Top View)

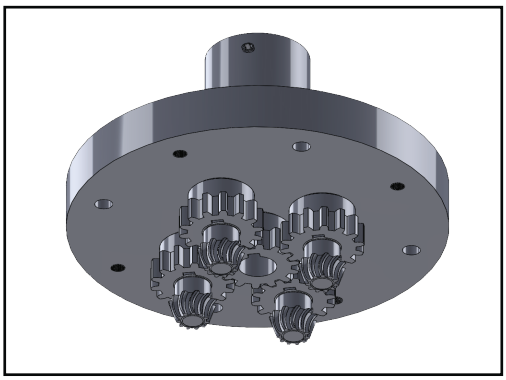

Fig: 7 Cover Part Preassembled (Lower View)

- Then lock the circlip in position which have the top side of the head.

- Attach the big spur gear with the graph screw as shown in fig.

- Then individually attach the side input shaft and set the pinion gear on the shaft at tapping hole positionand lock it.Total four set should be done.

- Set each individual part to the side bearing and lock with circilp at position on the top side of top half of gear box.

- Connecting the bush on middle input shaft through key and kewway and lock with 4 mm graph screw.

- Fill up totaly with grease greed of (N6,N4, N5).

- Close the gear box with top half and lock by key head screw.

**** Note that as per the bush ,motor head is required.***

MOTOR STAND

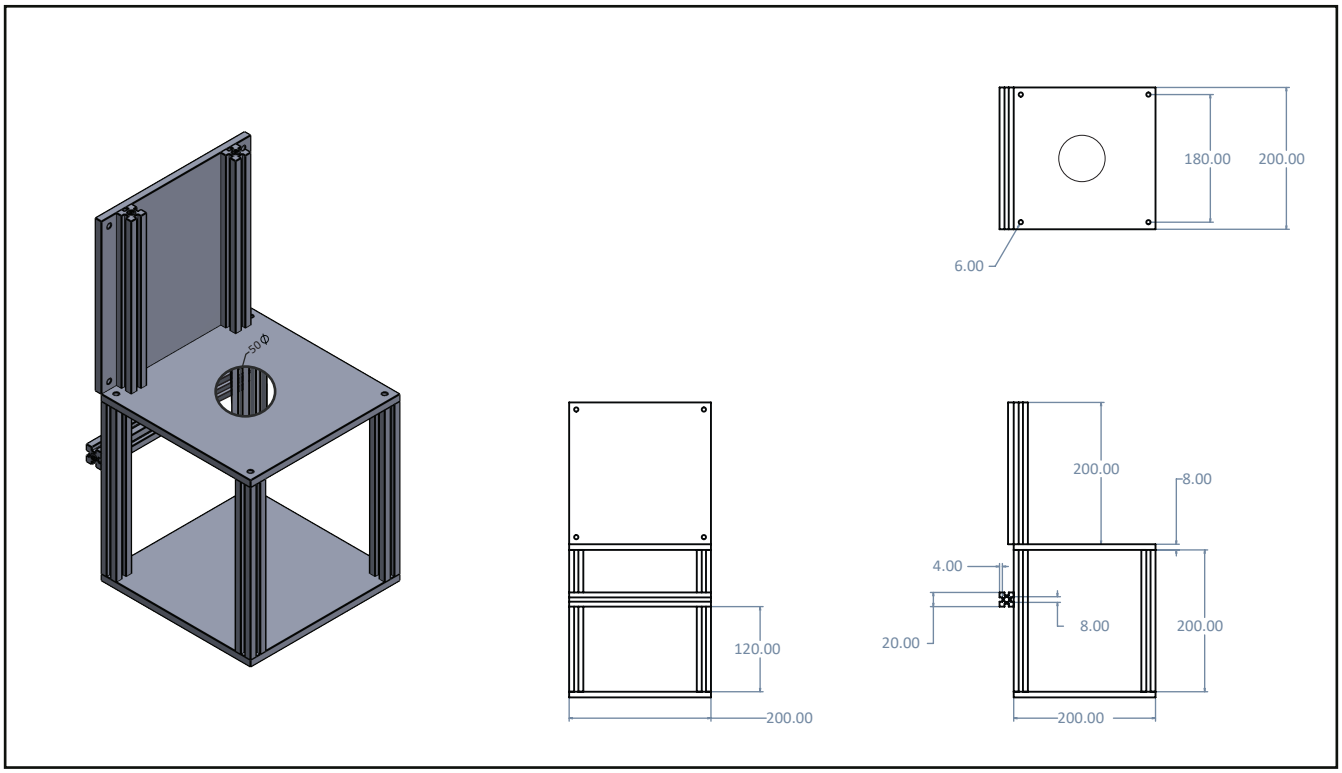

Fig: 8 Motor Stand

Steps for Assembling:

- As shown in the fig: 8, motor should be attached on the big round 50∅ hole on nylon plate at middle position.

- The base place shold be connected with the top plate by 204 mm length and fix with 6 mm nut and bolt(6mm= 1.5 inch).

- Each corner hole of the plate should be at 10mm distance from each side hole dia 6m.

**** Make sure that the corner holes of top plate and bottom plate should be done together. So that it wold be clamped properly.***

- Set the supporting plate with the motor supporting part.For that we have to set two supporting 20/20 profile rode which is connected with the top plate at respective side.

- The supporting rod is connected with 6 mm(1.5 inch) nut and bolt at the position of centre to centre distance is 20 mm between the respective corner hole centre.

- Give the two supporting rod (20/20 x 2 00 mm) with legs part of motor stand.

PULLY WHEEL

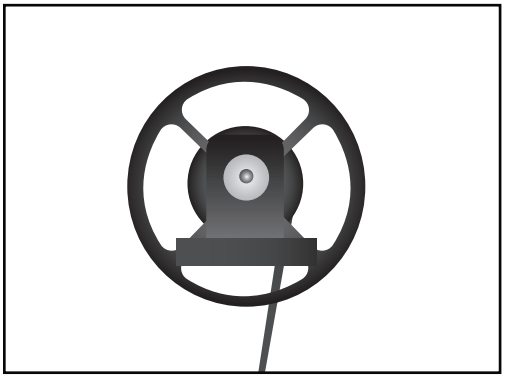

Fig: 9 Pully wheel(Front View)

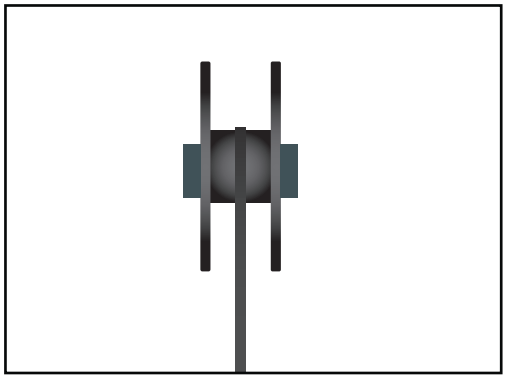

Fig: 10 Pully wheel(Side View)

Steps for Assembling:

- Lock the inner holder part and set the belt supporting part sideface and connect the belt with clockwise binding direction with the help of 3mm nut and bolt.

**** Make sure that every pully wheel belt should be connected in same position.***

TOP FRAME OF AERATION DEVICE

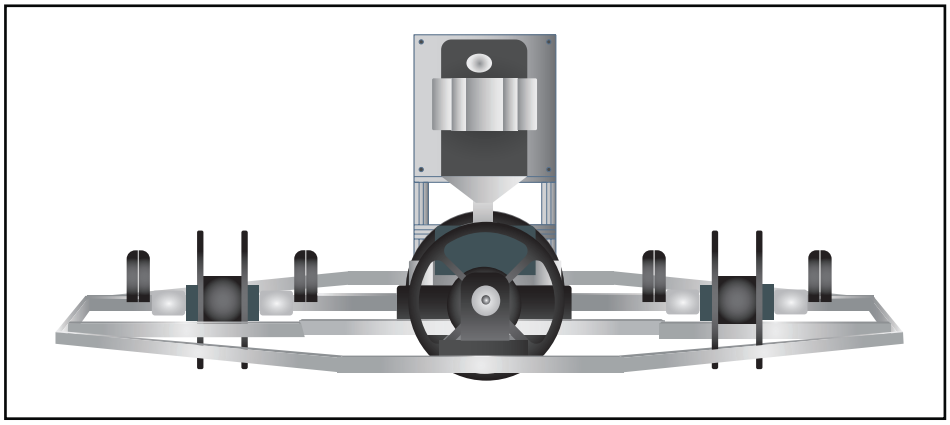

Fig: 11 Pully wheel(Front View)

Steps for Assembling:

- First attach the pulley wheel on pulley shaft on the middle.

- Then set the gear box with top frame middle portion.

- Attach the pulleyshaft with output shaft with 4mm nut and bolt.Lock and fix the position with the help of bearing.

**** Make sure that the pully wheel should be properly ready before assembly of assembly with gear box.***

DRUM FRAME

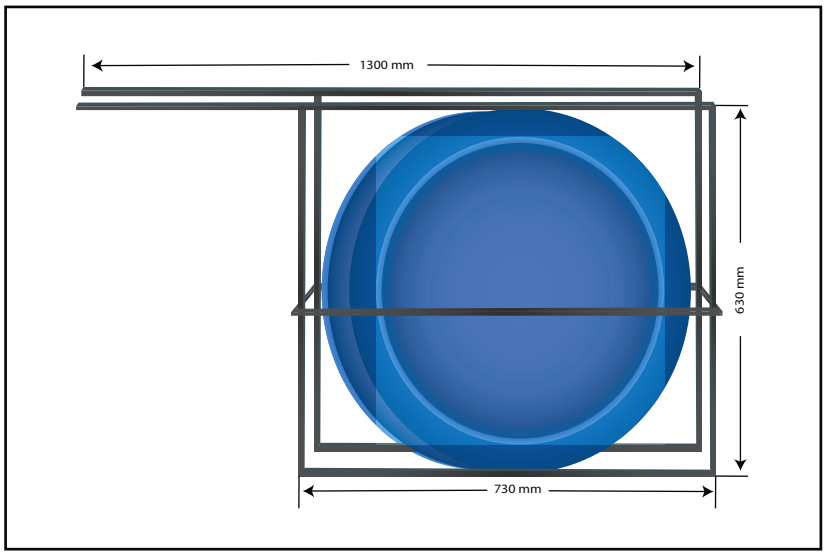

Fig: 12 Drum Frame (Front View)

Steps for Assembling:

- First assemble 1.3m pipe of drum frame with top frame of aeration device below the pully wheel frame side.

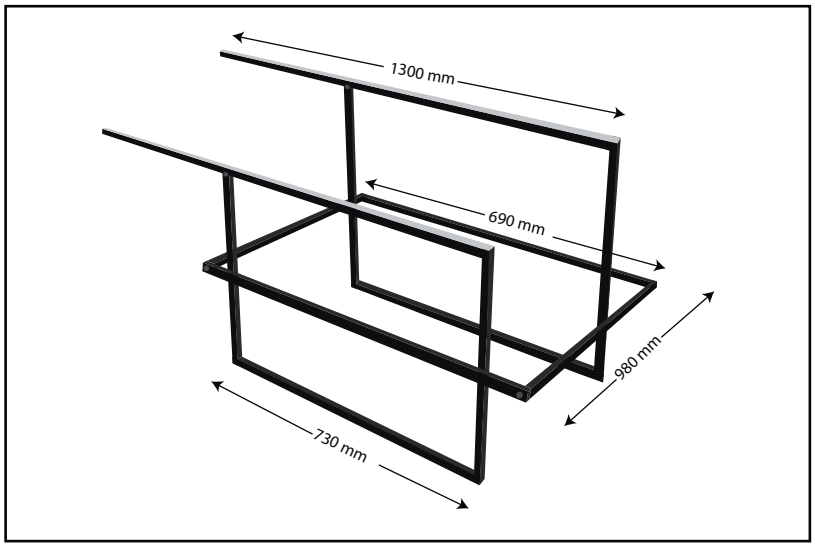

Fig: 13 Drum Frame (Front View)

- Other rods should be assembled as shown in Fig: 13 . First attach the four rod of 630 mm with two 980 mm rod.

- Second connect the two 730 mm rod individually with two 980 mm rod.

- Then set the drum into the structure and lock it with 790 mm rod connecting with two 980 mm rod at each side.

1.5m BASE FRAME

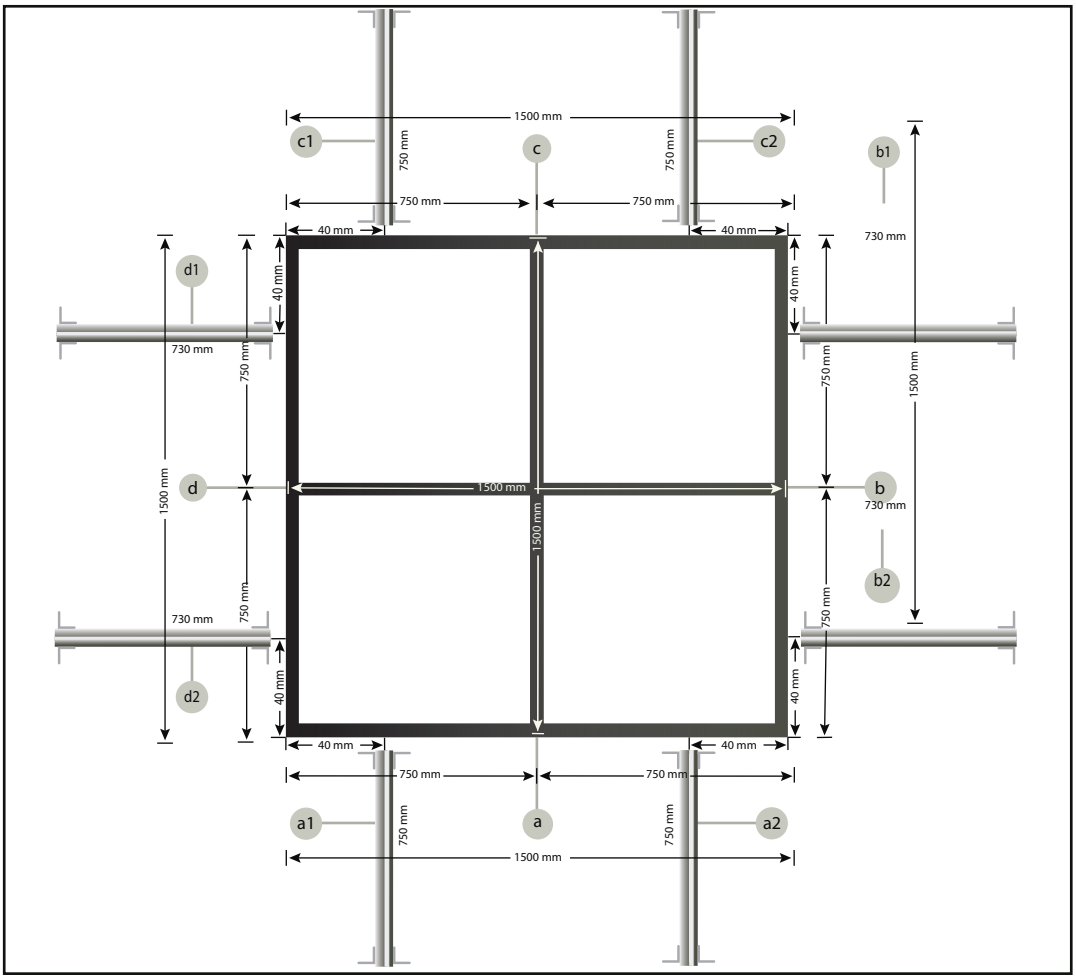

Fig: 14 1.5m Base Frame (Top View)

Steps for Assembling:

- This frame should be properly made through welding.

- The frame should be connect as per the labeling and with proper dimension which is shown in Fig: 11.

**** Make sure that before connecting the connector between 1.5m and 3m base frame he connection holes should be perfectly placed with respect to clamp holes.***

3m BASE FRAME

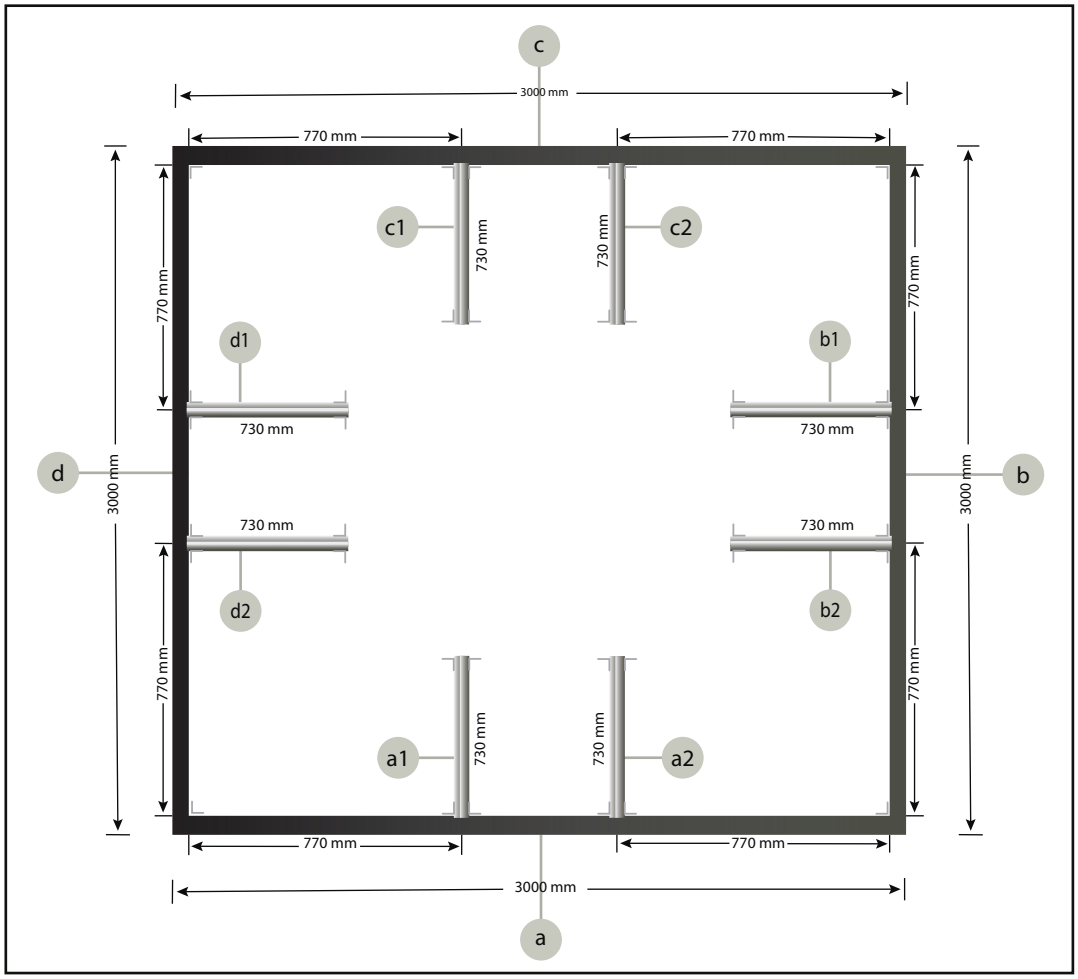

Fig: 15 3m Base Frame (Top View)

Steps for Assembling:

- The base frame should be connect as per the labeling and with proper dimension which is shown in Fig: 12.

**** Make sure that before connecting the connector between 1.5m and 3m base frame the connection holes should be perfectly placed with respect to clamp holes.***

SUPPORTING BELT

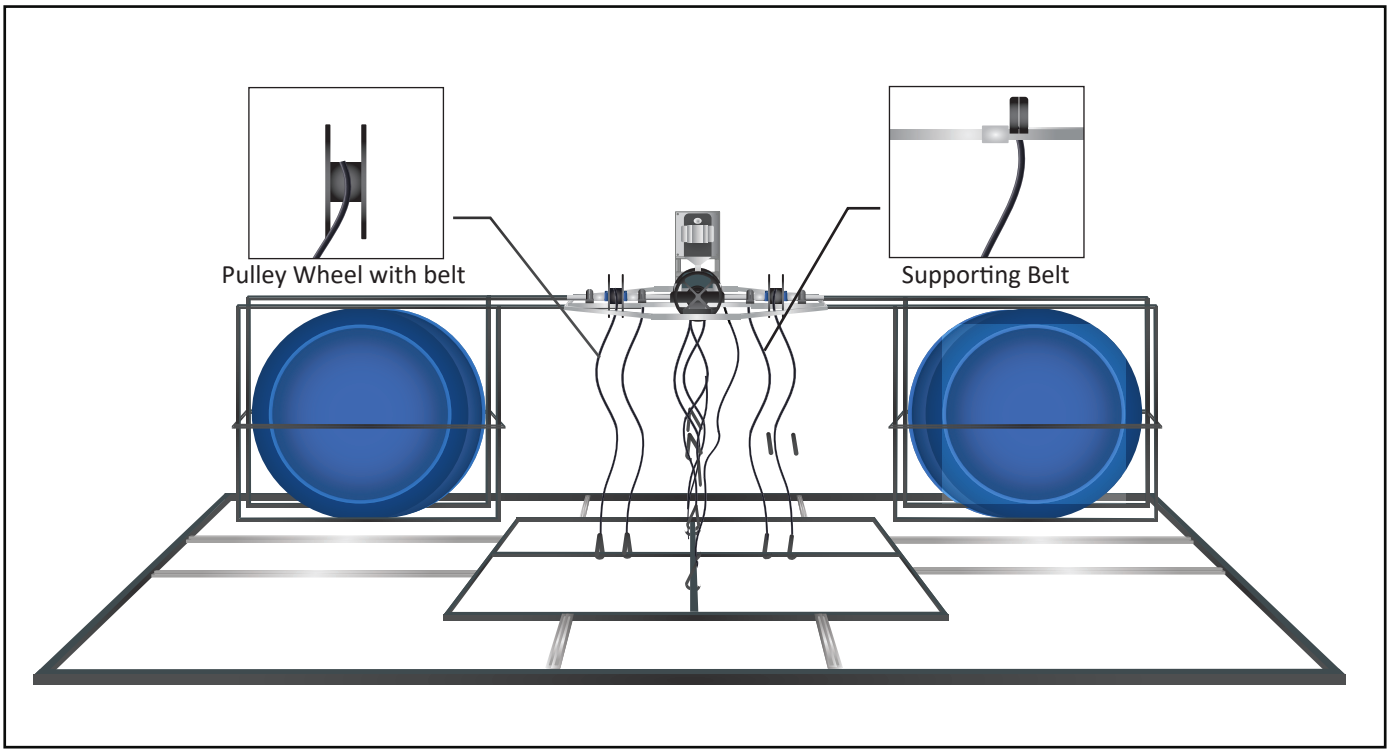

Fig: 16 Aeration Device (Front View)

Steps for Assembling:

- Connect the top frame and base frame using belt (Belt size should be maintained as per the requirement of pond depth.

- For connecting belt with base frame 4 mm hole should be made with equal distance of pulley wheel from gear box of the top frame.

Supporting Belt:

- It is connected with the top frame, bottom frame as well as the pulley wheel belt attachment.

- The position of supporting belt is on the base frame with respect to top frame's nearest bearing from gear box.That position should be fixed for hole.