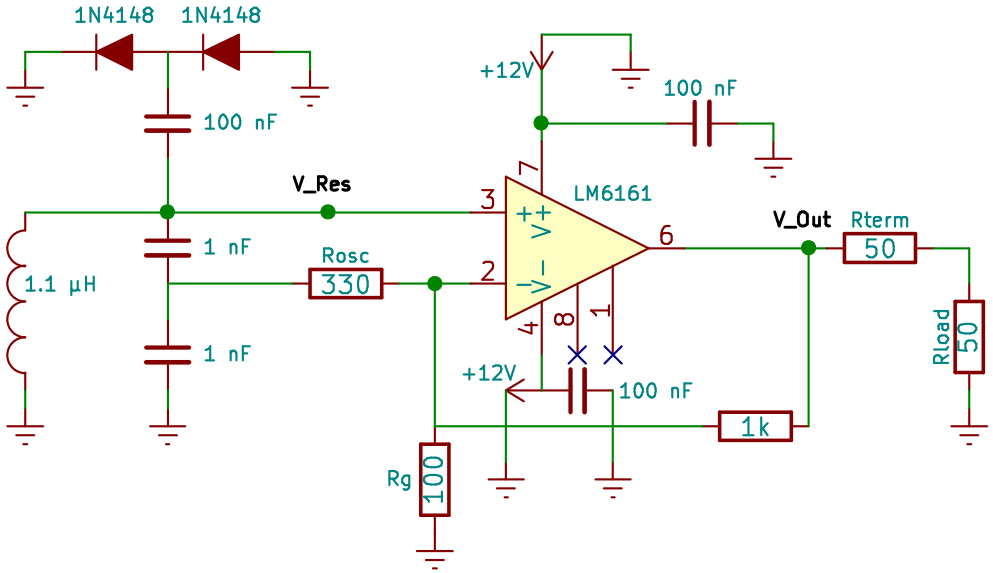

MHz-frequency sine wave oscillator using a high-speed current-feedback operational amplifier in a Colpitts oscillator with a high-power buffered output.

Based on "RF oscillator uses current-feedback op amp", EDN 2002-10-03, Victor Koren

Schematic by Brandon Curtis, 2016-06-01

Sheet: /
File: oscillator.sch

Title: RF Oscillator with Current-Feedback Op Amp

Size: User	Date: 2016-06-01	**Rev:** 1
KiCad E.D.A. kicad 4.0.2+e4-622538ubuntu16.04.1-stable		Id: 1/1