# Domain Adaptation with Source Selection for Motor-Imagery based BCI

Eunjin Jeon, Wonjun Ko, and Heung-Il Suk
*Department of Brain and Cognitive Engineering, Korea University*
Anam-Ro 145, Seoul 02841, Republic of Korea
{eunjinjeon, wjko, hisuk}@korea.ac.kr

***Abstract*—Recent successes of deep learning methods in various applications have inspired BCI researchers for their use in EEG classification. However, data insufficiency and high intra- and inter-subject variabilities hinder from taking their advantage of discovering complex patterns inherent in data, which can be potentially useful to enhance EEG classification accuracy. In this paper, we devise a novel framework of training a deep network by adapting samples of other subjects as a means of domain adaptation. Assuming that there are EEG trials of motor-imagery tasks from multiple subjects available, we first select a subject whose EEG signal characteristics are similar to the target subject based on their power spectral density in resting-state EEG signals. We then use EEG signals of both the selected subject (called a source subject) and the target subject jointly in training a deep network. Rather than training a single path network, we adopt a multi-path network architecture, where the shared bottom layers are used to discover common features for both source and target subjects, while the upper layers branch out into (1) source-target subject identification, (2) label prediction optimized for a source subject, and (3) label prediction optimized for a target subject. Based on our experimental results over the BCI Competition IV-IIa dataset, we validated the effectiveness of the proposed framework in various aspects.**

***Index Terms*—Brain-Computer Interface, Electroencephalogram (EEG), Motor Imagery, Deep Learning, Domain Adaptation, Transfer Learning**

## I. Introduction

BRAIN-Computer Interface (BCI) can provide a communication pathway between the brain and an external device by utilizing, typically, electroencephalogram (EEG) [1]. Of various brain signal types, an event related desynchronization (ERD/ERS), induced during physical or imagery body movement, is advantageous for a practical use of BCI, thanks to its voluntary induction at a user's will.

Brain signals show high variability among subjects and sessions of the same subject due to inherent background neural activities, fatigue, concentration levels, *etc*. [2]. In this regard, it is been of big challenges in machine-learning based BCIs and a classifier trained on one subject is not directly applicable to decode brain signals of other subjects. In order to circumvent this limitation, there have been efforts of jointly using samples of multiple subjects via transfer learning [3], [4].

In recent years, domain adaptation, a case of transfer learning, has drawn increasing attention in various fields, where machine learning plays a core role, to overcome the difference in distributions between training and test samples [5], [6]. The key strategy in domain adaptation is to minimize the distributional discrepancy in a feature space, where the ensuing classifier could learn patterns for generalization by leveraging complementary information from other samples and thus enhancing classification performance. In BCI, the previous studies [7], [8] showed the effectiveness of domain adaptation to mitigate difference in data distribution among subjects or sessions.

Meanwhile, deep learning has been emerged as a major tool for pattern recognition tasks, thanks to its ability of learning feature representations and a classifier simultaneously in a unified framework. There have also been efforts to apply different forms of deep learning architectures in BCIs [9], [10]. However, their application to BCIs is still limited and suffers from data insufficiency, resulting in low performance compared to the conventional linear models [11], [12]. Nonetheless, a gradient-based learning mechanism in deep learning allows to discover shared feature representations among subjects and/or sessions from raw data. In this work, we introduce a deep-learning based domain adaptation method in EEG-based BCI. Specifically, we propose a method of selecting a source subject whose spatio-spectral characteristic in his/her resting-state signals are similar to that of the target subject. Our deep model is then trained with samples from the source and the target subject in an adversarial way.

## II. Methods

In this section, we describe our framework for learning by adaptation for motor-imagery based BCI. In our work, we assume that there are a few EEG sample sets, called 'supplementary sets,' each of which is acquired from a different subject, and we have a separate dataset from a target subject. The key aspect of our work is that while in general, the samples of a target subject are insufficient to train a deep model in a robust manner, samples of other subjects can be used. In Fig. 1, there are two major components, namely, source subject selection and deep model training for domain adaptation.

### A. Source Subject Selection

Given a set of training samples from multiple subjects during training, in our framework, we select a subject whose spatio-spectral signal characteristic is similar to that of a target subject. In measuring similarity between two subjects, we use

Authorized licensed use limited to: University of Maryland Baltimore Cty. Downloaded on April 22,2026 at 00:00:07 UTC from IEEE Xplore. Restrictions apply.

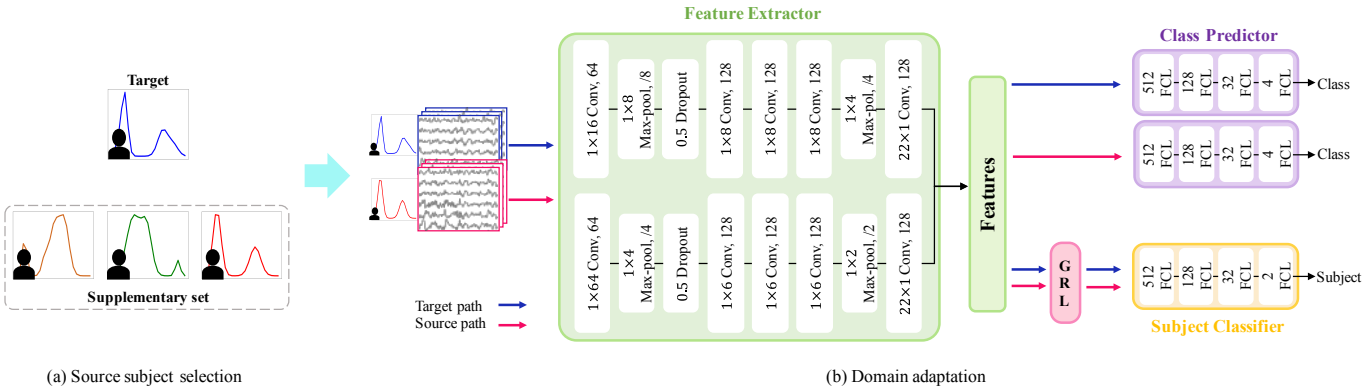


(a) Source subject selection

(b) Domain adaptation

Fig. 1. An overview of the proposed framework: (a) Calculate a similarity between a target and source subjects using power spectral density in resting-state EEG signals and find the most similar subject (*i.e.*, source) with a target subject. (b) Train our network with EEG trials of both target and source subjects. Our network consists of a *feature extractor* (green), *class predictor* (purple), and *subject classifier* (yellow). A GRL (*gradient reversal layer*) is a special unit, which plays an important role in backpropagation during network parameters updating, but no role during feedforward processing [5].

resting-state EEG signals based on the previous work that presented their high relations to motor-imagery tasks [4], [13]. Furthermore, it has been shown that the resting-state signals carry information about motor-related brain dynamics [14], [15]. Wang *et al.* assumed that a kind of spatial patterns related to sensorimotor rhythm is shown under both the resting and motor imagery state for each subject [14]. They demonstrated that when using resting-state EEG to extract independent components for spatial filters, the accuracy is as good as those in using motor-relevant EEG. Blankertz *et al.* also showed that we can predict individual differences in BCI performance by calculating the power spectral density (PSD) in the resting-state [15]. Thus, we can measure the similarity between subjects in motor-related brain activities by considering PSD in the resting-state [4].

In order to select a source subject in the data pool, we transform the resting-state of the EEG signals into a frequency domain and calculate the PSD using welch's method [16]. Electrophysiological signals consist of periodic and aperiodic components in a neural power spectrum. The aperiodic one is regarded as "background" $1/f$ component of neural power spectra [17]. After calculating the background noise component, we fit the PSD with it. Then, we subtract the background noise curve from the fitted curve to scale the range of all subjects. We choose $k$ channels and $r$ frequency bands related the task, then concatenate $k$ channels' PSD of the selected frequency bands into a vector $\mathbf{f}$. For similarity measurement, we use a cosine distance $D$ between a subject $A$ and a subject $B$ as follows:

$$D(A,B) = 1 - \frac{\mathbf{f}_A^\top \mathbf{f}_B}{\|\mathbf{f}_A\| \, \|\mathbf{f}_B\|} \tag{1}$$

where $\|\cdot\|$ denotes a norm of a vector.

### B. Domain Adaptation

Note that in our work, each subject is regarded as one domain, and thus we use terms of domain and subject interchangeably throughout the paper. By adopting Ganin *et al.*'s way in constructing a network architecture for domain adaptation [5], we have designed our network, as in Fig. 1(b), which is composed of 3 components, *i.e.*, a *feature extractor* $\mathcal{F}$, a *subject classifier* $\mathcal{C}$, and subject-specific *class predictors* $\mathcal{P}_{\mathcal{D}_S/\mathcal{D}_T}$ ($\mathcal{D}_S$: source, $\mathcal{D}_T$: target). A feature extractor maps an input sample of $\{(\mathbf{x}_i, y_i)\}_{i=1}^{N+M}$ from either a source subject $\mathcal{D}_S$ or a target subject $\mathcal{D}_T$ into a common feature space, where $\mathbf{x}_i$ and $y_i$ denote, respectively, an input EEG trial and the corresponding label, and $N$ and $M$ are the number of samples from source and target subjects. Then, the feature representations from $\mathcal{F}(\mathbf{x}_i)$ are fed into a subject classifier $\mathcal{C}$ and one of the class predictors, *i.e.*, $\mathcal{P}_S$ or $\mathcal{P}_T$, depending on which subject the input $\mathbf{x}_i$ comes from. A subject classifier is trained to identify incoming features are from a sample $\mathbf{x}_i$ of $\mathcal{D}_S$ or $\mathcal{D}_T$. We define a cross-entropy loss $\mathcal{L}_{ce}$ for a subject classifier $\mathcal{C}$ as follows:

$$\mathcal{L}^{\mathcal{C}} = \frac{1}{N+M} \sum_{i=1}^{N+M} \mathcal{L}_{ce}(\mathcal{C}(\mathcal{F}(\mathbf{x}_i)), d_i) \tag{2}$$

where $d_i$ denotes a subject label for the sample $\mathbf{x}_i$.

Regarding the class-label predictors $\mathcal{P}_{\mathcal{D}_S}$ and $\mathcal{P}_{\mathcal{D}_T}$, we use the same network architectures for both, but train their parameters separately. Concisely, depending on the subject of the input samples, the corresponding label predictor is trained only. The loss functions of $\mathcal{P}_{\mathcal{D}_S}$ and $\mathcal{P}_{\mathcal{D}_T}$ are defined with the use of a cross-entropy, similar to Eq. (2)

$$\mathcal{L}^{\mathcal{P}}_{\mathcal{D}_S} = \frac{1}{N} \sum_{i=1}^{N} \mathcal{L}_{ce}(\mathcal{P}_{\mathcal{D}_S}(\mathcal{F}(\mathbf{x}_i)), y_i) \tag{3}$$

$$\mathcal{L}^{\mathcal{P}}_{\mathcal{D}_T} = \frac{1}{M} \sum_{i=1}^{M} \mathcal{L}_{ce}(\mathcal{P}_{\mathcal{D}_T}(\mathcal{F}(\mathbf{x}_i)), y_i) \tag{4}$$

The *gradient reversal layer* (GRL) plays an important role during training in our framework. The GRL passes the incoming features $\mathcal{F}(\mathbf{x}_i)$ unchanged to the next layer during forward propagation, but multiplies a negative value during

Authorized licensed use limited to: University of Maryland Baltimore Cty. Downloaded on April 22,2026 at 00:00:07 UTC from IEEE Xplore. Restrictions apply.

the backpropagation, making the estimated gradients from the upper layer to be reversed. By training with the reversed gradients, the lower layers are basically guided to extract features of two subjects indistinguishable, thus allowing for a common shared feature representations. Hence, the objective function for a feature extractor $\mathcal{F}$ needs modifying as follows:

$$\mathcal{L}^{\mathcal{F}} = \frac{1}{2}(\mathcal{L}^{\mathcal{P}}_{\mathcal{D}_S} + \mathcal{L}^{\mathcal{P}}_{\mathcal{D}_T}) - \lambda\mathcal{L}^{\mathcal{C}} \tag{5}$$

where $\lambda$ is a hyper-parameter to adjust the trade-off between the loss of class predictors ($\mathcal{P}_{\mathcal{D}_S}$ and $\mathcal{P}_{\mathcal{D}_T}$) and a subject classifier ($\mathcal{C}$).

In the end, we have four loss functions and update parameters of the components by minimizing Eqs. (2)-(5) jointly.

## III. Experiments & Results

### A. Dataset & Preprocessing

We used BCI Competition IV-IIa dataset [18]. This dataset consists of EEG signals of four different motor imagery tasks (left hand, right hand, feet, and tongue) acquired from nine subjects. All signals recorded from 22 Ag/AgCl electrodes according to the 10-20 system. The signals were sampled with 250 Hz and bandpass-filtered between 0.5 Hz and 100 Hz. We applied a large Laplacian filtering in order to reduce noise. It includes two sessions with 72 trials for each class, one is for training and the other is for evaluation. In a trial, there are six seconds of signals including fixation cross, cue, and motor imagery task signal. We regarded signals of 1-second before a cue as baseline, after segmenting signals, we subtracted a mean value of the baseline to each trial. In order for data augmentation, we applied a sliding window method with a 2-second (512 timepoint) length for a window.

### B. Source Subject Selection

We transformed the temporal resting-state signals into a frequency domain. Then, we calculated the PSD using welch's method in the frequency domain per subject. After correcting individual background noise, we subtracted the background noise curve from the corrected curve. We only used signals of the specific frequency band related to sensorimotor rhythm ($8 \sim 30$ Hz) in all channels, then concatenated all channels' PSD into a vector. We calculated the cosine distance between all subjects and performed a hierarchical clustering based an average linkage method. Based on the clustering results shown in Fig. 2, we selected a source subject for each target subject as in TABLE I.

### C. Network Structure and Training

Our feature extractor consists of 2 path convolution neural network (CNN), inspired by [19], where there are five convolutional layers in each path. Four layers are temporal convolutional layer with $1 \times s$ kernel, while the last one is a spatial convolutional layer with $22 \times 1$ kernel. One path can capture temporal pattern of signals, while the other can learn spectral pattern according to their kernel size [19]. Thus, our feature extractor extracts temporal, spectral, and spatial features. The detailed architecture is given in Fig. 1. After concatenating the features trained through 2 path CNN, the features are passed to a subject classifier and label predictors. We made a subject classifier and label predictors, three fully-connected layers (FCL), respectively. In this part, we also used the batch normalization and applied the leaky ReLU activation function in all FCL. Then, we set $\lambda$ gradually changing from 0 to 1 according to [5]. Also, we set the learning rate and batch size as $0.0001$ and $32$, respectively.

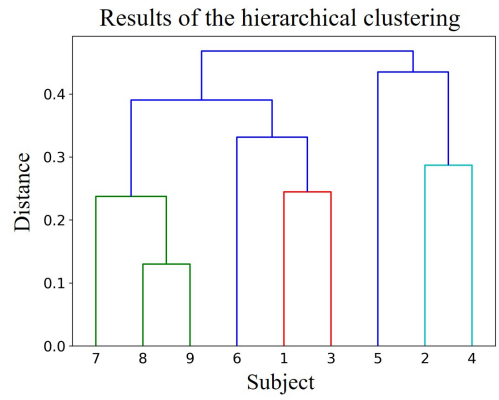


Fig. 2. Results of the hierarchical clustering on PSD curve of the subjects: X-axis and Y-axis denote the cosine distance and subject respectively.

TABLE I
Selected source subject: T, S, and D denote a target, source subject, and distance, respectively.

| T | 1 | 2 | 3 | 4 | 5 | 6 | 7 | 8 | 9 |
|---|---|---|---|---|---|---|---|---|---|
| S | 3 | 4 | 1 | 2 | 4 | 3 | 9 | 9 | 8 |
| D | 0.24 | 0.28 | 0.24 | 0.28 | 0.39 | 0.29 | 0.22 | 0.12 | 0.12 |

We trained our network with both target and source subjects' EEG training data. TABLE II shows the classification accuracies for cases with and without a subject classifier. In the table, $\kappa$ is a cohen's kappa value defined as:

$$\kappa \equiv \frac{p_0 - p_e}{1 - p_e}. \tag{6}$$

where $p_o$ is the accuracy of predictions and $p_e$ is the probability of coincidence between ground truth and predictions. Except for the subjects of 2, 4, 5, and 6, who are mostly regarded as BCI illiterate [20], [21], the classification accuracies with a subject classifier improved approximately 4% on average, compared to those without a subject classifier. When considered the clustering results, especially the cosine distances and the classification accuracies, we presume that the cosine distance of 0.25 is kind of a threshold for domain adaptation in motor-imagery BCI. In other words, when the smallest distance from a source subject is higher than 0.25, it is less likely to take advantage of domain adaptation from other subjects [3].

## IV. Conclusion

This study proposed a method of domain adaptation for motor-imagery BCI by adaptively selecting a source subject.

Authorized licensed use limited to: University of Maryland Baltimore Cty. Downloaded on April 22,2026 at 00:00:07 UTC from IEEE Xplore. Restrictions apply.

TABLE II

CLASSIFICATION RESULTS: IN THE W/O $\mathcal{C}$ CASE, WE TRAINED A FEATURE EXTRACTOR AND LABEL PREDICTOR USING THE EACH ROW SUBJECT WITHOUT A SUBJECT CLASSIFIER. IN THE W/ CASE, WE USED ALL COMPONENTS USING EACH TARGET AND CORRESPONDING SOURCE SUBJECT'S DATA.

| Subject | w/o $\mathcal{C}$ | | w/ $\mathcal{C}$ | |
|---|---|---|---|---|
| | Accuracy | $\kappa$ | Accuracy | $\kappa$ |
| 1 | 0.67 | 0.56 | 0.70 | 0.60 |
| 2 | 0.45 | 0.26 | 0.38 | 0.17 |
| 3 | 0.68 | 0.57 | 0.76 | 0.69 |
| 4 | 0.42 | 0.23 | 0.39 | 0.19 |
| 5 | 0.32 | 0.09 | 0.31 | 0.07 |
| 6 | 0.39 | 0.18 | 0.38 | 0.18 |
| 7 | 0.64 | 0.51 | 0.70 | 0.59 |
| 8 | 0.57 | 0.43 | 0.63 | 0.50 |
| 9 | 0.56 | 0.41 | 0.59 | 0.45 |

Specifically, we devised a distance measurement with spatio-spectral features in resting-state EEG signals. Also, we show the possibility of domain adaptation in BCI with couples, who have the most similar to each other. We expect that the performance will also be boosted for other networks based on our method.

## ACKNOWLEDGMENT

This work was supported by the Institute of Information & Communications Technology Planning & Evaluation (IITP) grant funded by the Korea government (No. 2017-0-00451; Development of BCI based Brain and Cognitive Computing Technology for Recognizing User's Intentions using Deep Learning).

## REFERENCES

[1] B. Graimann, B. Allison, and G. Pfurtscheller, "Brain–Computer Interfaces: A Gentle Introduction," in *Brain-Computer Interfaces*, pp. 1–27, Springer, 2009.

[2] V. Jayaram, M. Alamgir, Y. Altun, B. Scholkopf, and M. Grosse-Wentrup, "Transfer Learning in Brain-Computer Interfaces," *IEEE Computational Intelligence Magazine*, vol. 11, no. 1, pp. 20–31, 2016.

[3] Y.-P. Lin and T.-P. Jung, "Improving EEG-based Emotion Classification Using Conditional Transfer Learning," *Frontiers in Human Neuroscience*, vol. 11, p. 334, 2017.

[4] C.-S. Wei, Y.-P. Lin, Y.-T. Wang, C.-T. Lin, and T.-P. Jung, "A Subject-transfer Framework for Obviating Inter-and Intra-Subject Variability in EEG-based Drowsiness Detection," *NeuroImage*, vol. 174, pp. 407–419, 2018.

[5] Y. Ganin, E. Ustinova, H. Ajakan, P. Germain, H. Larochelle, F. Laviolette, M. Marchand, and V. Lempitsky, "Domain-Adversarial Training of Neural Networks," *The Journal of Machine Learning Research*, vol. 17, no. 1, pp. 2096–2030, 2016.

[6] P. Zanini, M. Congedo, C. Jutten, S. Said, and Y. Berthoumieu, "Transfer Learning: a Riemannian Geometry Framework with Applications to Brain-Computer Interfaces," *IEEE Transactions on Biomedical Engineering*, vol. 65, no. 5, pp. 1107–1116, 2018.

[7] M. Sugiyama, M. Krauledat, and K.-R. MÃžller, "Covariate Shift Adaptation by Importance Weighted Cross Validation," *Journal of Machine Learning Research*, vol. 8, no. May, pp. 985–1005, 2007.

[8] X. Chai, Q. Wang, Y. Zhao, X. Liu, O. Bai, and Y. Li, "Unsupervised Domain Adaptation Techniques based on Auto-Encoder for Non-Stationary EEG-based Emotion Recognition," *Computers in Biology and Medicine*, vol. 79, pp. 205–214, 2016.

[9] R. T. Schirrmeister, J. T. Springenberg, L. D. J. Fiederer, M. Glasstetter, K. Eggensperger, M. Tangermann, F. Hutter, W. Burgard, and T. Ball, "Deep Learning with Convolutional Neural Networks for EEG Decoding and Visualization," *Human Brain Mapping*, vol. 38, no. 11, pp. 5391–5420, 2017.

[10] P. Bashivan, I. Rish, M. Yeasin, and N. Codella, "Learning Representations from EEG with Deep Recurrent-Convolutional Neural Networks," *arXiv preprint arXiv:1511.06448*, 2015.

[11] F. Lotte and C. Guan, "Regularizing Common Spatial Patterns to Improve BCI Designs: Unified Theory and New Algorithms," *IEEE Transactions on Biomedical Engineering*, vol. 58, no. 2, pp. 355–362, 2011.

[12] W. Ko, J. Yoon, E. Kang, E. Jun, J.-S. Choi, and H.-I. Suk, "Deep Recurrent Spatio-Temporal Neural Network for Motor Imagery based BCI," in *2018 6th International Conference on Brain-Computer Interface (BCI)*, pp. 1–3, IEEE, 2018.

[13] H. Morioka, A. Kanemura, J.-i. Hirayama, M. Shikauchi, T. Ogawa, S. Ikeda, M. Kawanabe, and S. Ishii, "Learning a Common Dictionary for Subject-Transfer Decoding with Resting Calibration," *NeuroImage*, vol. 111, pp. 167–178, 2015.

[14] Y. Wang, Y.-T. Wang, and T.-P. Jung, "Translation of EEG Spatial Filters from Resting to Motor Imagery Using Independent Component Analysis," *PloS One*, vol. 7, no. 5, p. e37665, 2012.

[15] B. Blankertz, C. Sannelli, S. Halder, E. M. Hammer, A. Kübler, K.-R. Müller, G. Curio, and T. Dickhaus, "Neurophysiological Predictor of SMR-based BCI Performance," *NeuroImage*, vol. 51, no. 4, pp. 1303–1309, 2010.

[16] P. Welch, "The Use of Fast Fourier Transform for the Estimation of Power Spectra: A Method based on Time Averaging Over Short, Modified Periodograms," *IEEE Transactions on Audio and Electroacoustics*, vol. 15, no. 2, pp. 70–73, 1967.

[17] M. Haller, T. Donoghue, E. Peterson, P. Varma, P. Sebastian, R. Gao, T. Noto, R. T. Knight, A. Shestyuk, and B. Voytek, "Parameterizing Neural Power Spectra," *bioRxiv*, p. 299859, 2018.

[18] C. Brunner, R. Leeb, G. Müller-Putz, A. Schlögl, and G. Pfurtscheller, "BCI Competition 2008–Graz Data Set A," *Institute for Knowledge Discovery (Laboratory of Brain-Computer Interfaces), Graz University of Technology*, vol. 16, 2008.

[19] A. Supratak, H. Dong, C. Wu, and Y. Guo, "DeepSleepNet: A Model for Automatic Sleep Stage Scoring based on Raw Single-channel EEG," *IEEE Transactions on Neural Systems and Rehabilitation Engineering*, vol. 25, no. 11, pp. 1998–2008, 2017.

[20] K. K. Ang, Z. Y. Chin, H. Zhang, and C. Guan, "Filter Bank Common Spatial Pattern (FBCSP) in Brain-Computer Interface," in *2008 IEEE International Joint Conference on Neural Networks*, pp. 2390–2397, IEEE, 2008.

[21] X. Xie, Z. L. Yu, H. Lu, Z. Gu, and Y. Li, "Motor Imagery Classification based on Bilinear Sub-Manifold Learning of Symmetric Positive-definite Matrices," *IEEE Transactions on Neural Systems and Rehabilitation Engineering*, vol. 25, no. 6, pp. 504–516, 2017.

Authorized licensed use limited to: University of Maryland Baltimore Cty. Downloaded on April 22,2026 at 00:00:07 UTC from IEEE Xplore. Restrictions apply.