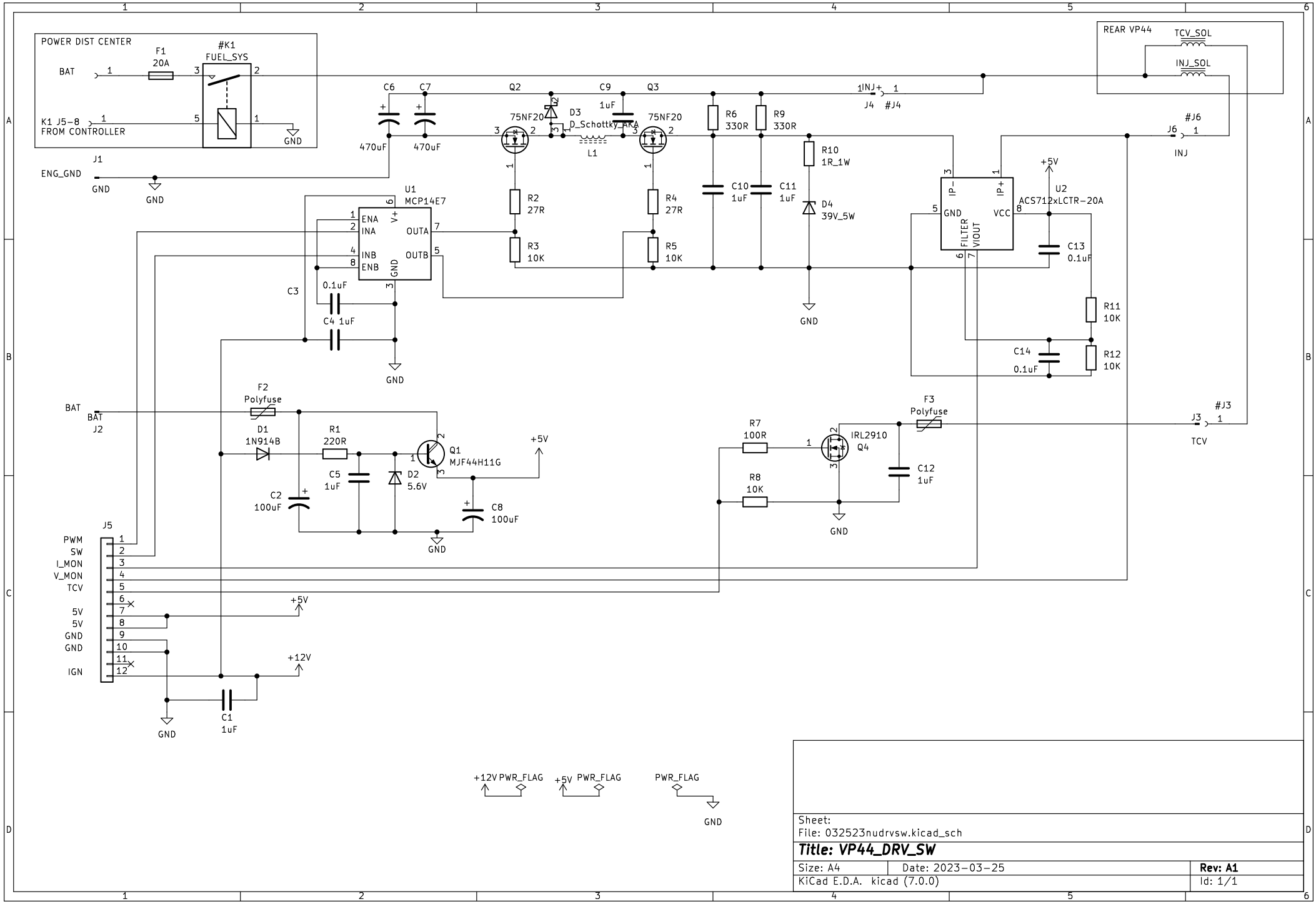

Sheet:
File: 032523nudrvsw.kicad_sch

Title: VP44_DRV_SW

Size: A4	Date: 2023-03-25	**Rev: A1**
KiCad E.D.A. kicad (7.0.0)		Id: 1/1