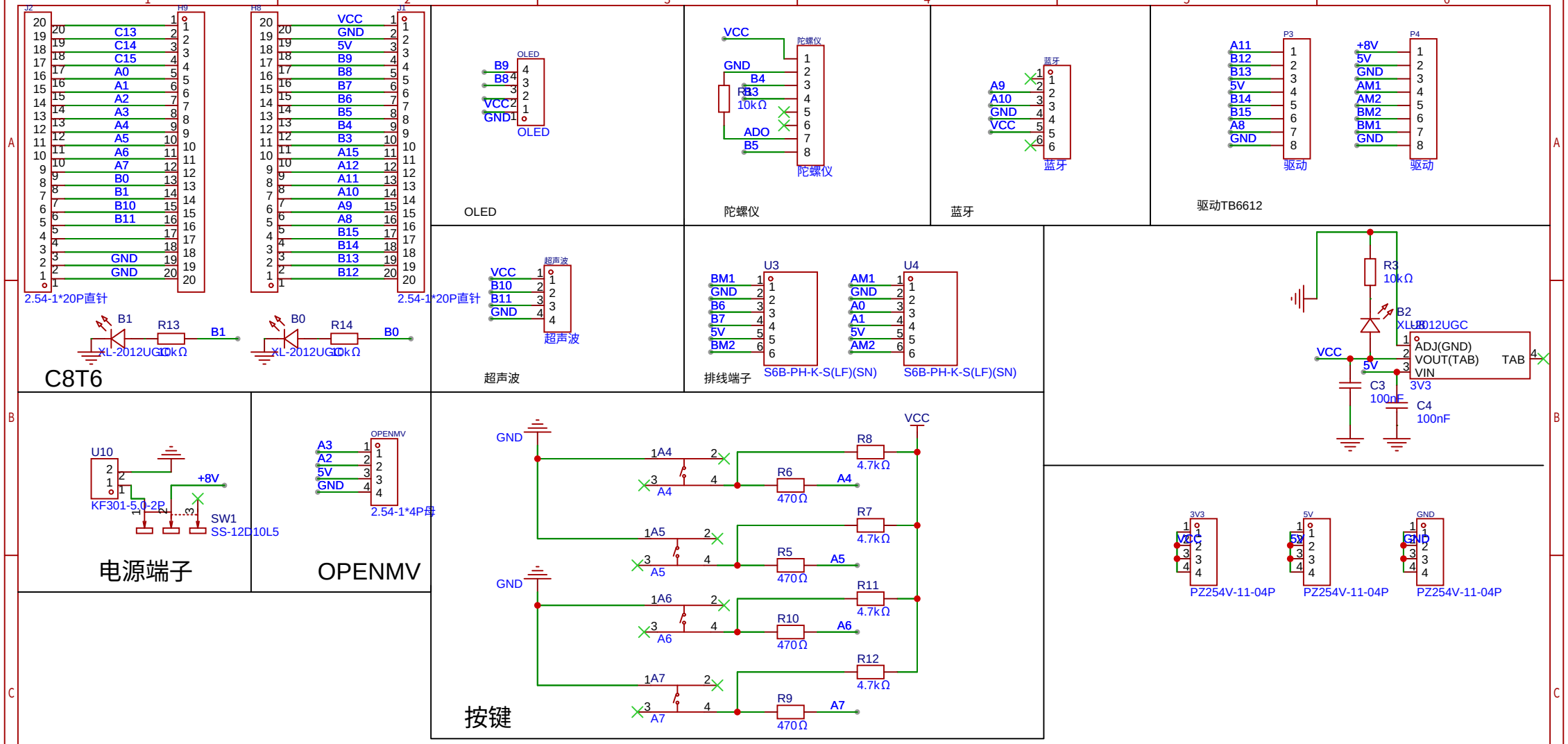

Schematic	Schematic1	Update Date	2023-09-28
		Create Date	2023-06-29
Page	P1	Part Number	
Drawed		平衡小车	
Reviewed			
		VER	SIZE	PAGE 1 OF 1
嘉立创EDA		V1.0	A3	嘉立创EDA