REVISIONS			
REV.	DESCRIPTION	DATE	APPROVED
A	Modified to Hold Linear Actuator	03292023	nwedyck

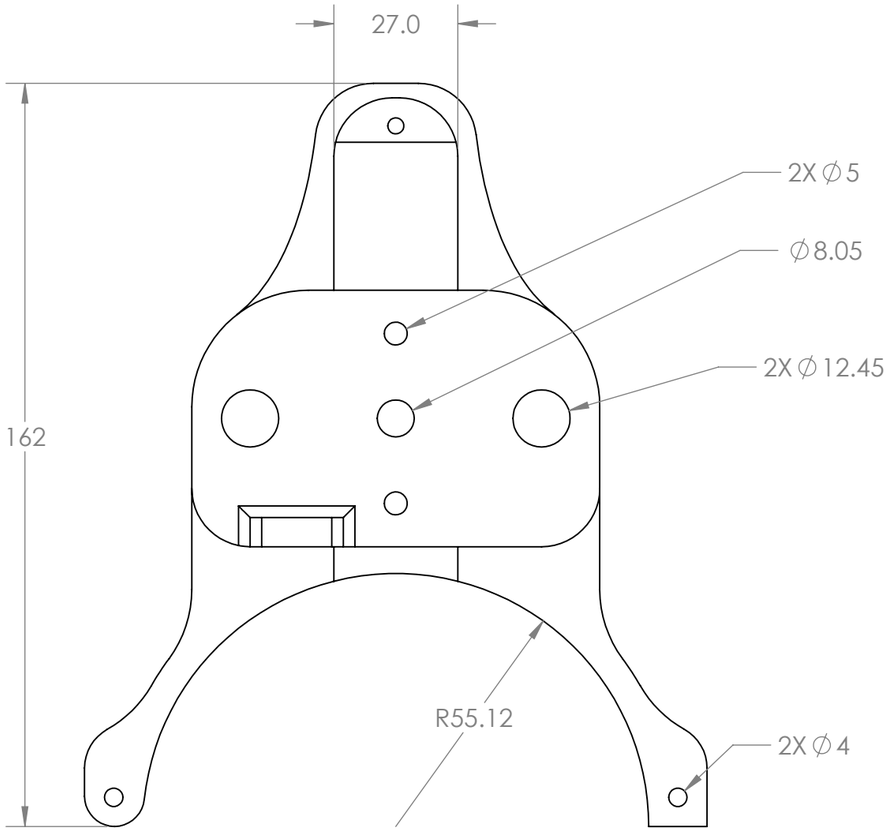

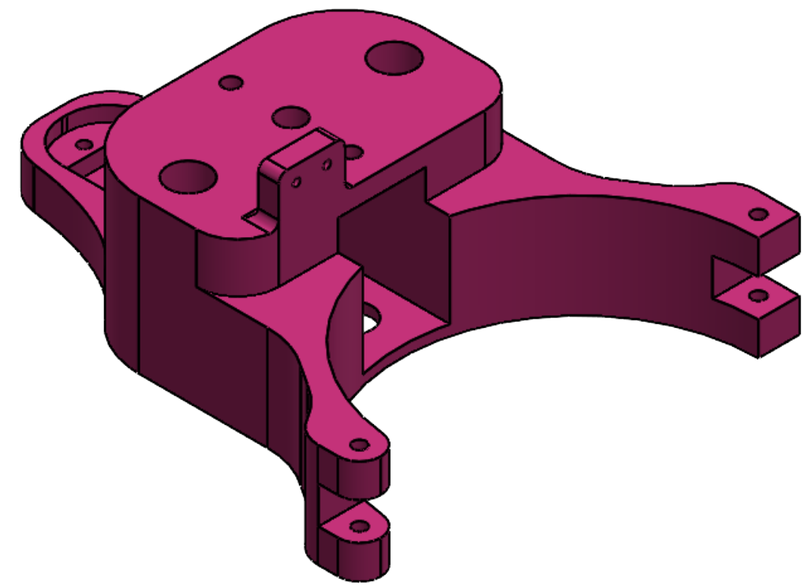

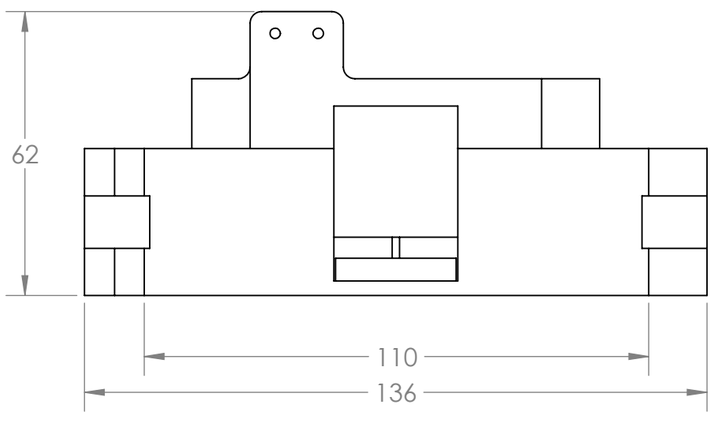

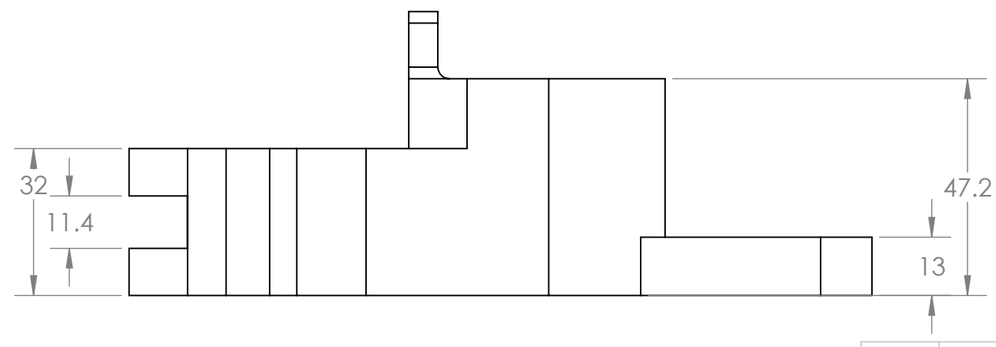

	NAME	DATE
DRAWN	nwedyck	11042022
CHECKED		

UNLESS OTHERWISE SPECIFIED:

DIMENSIONS ARE IN MILLIMETERS
TOLERANCES:
ONE PLACE DECIMAL ±0.1
TWO PLACE DECIMAL ±0.05
THREE PLACE DECIMAL ±0.009

TITLE:
Bottle Cutter Main Mid

WEIGHT	DWG. NO.	REV
N/A	3	A

MATERIAL	FINISH	
PLA	N/A	SCALE: 1:1.3

SOLIDWORKS Educational Product. For Instructional Use Only.