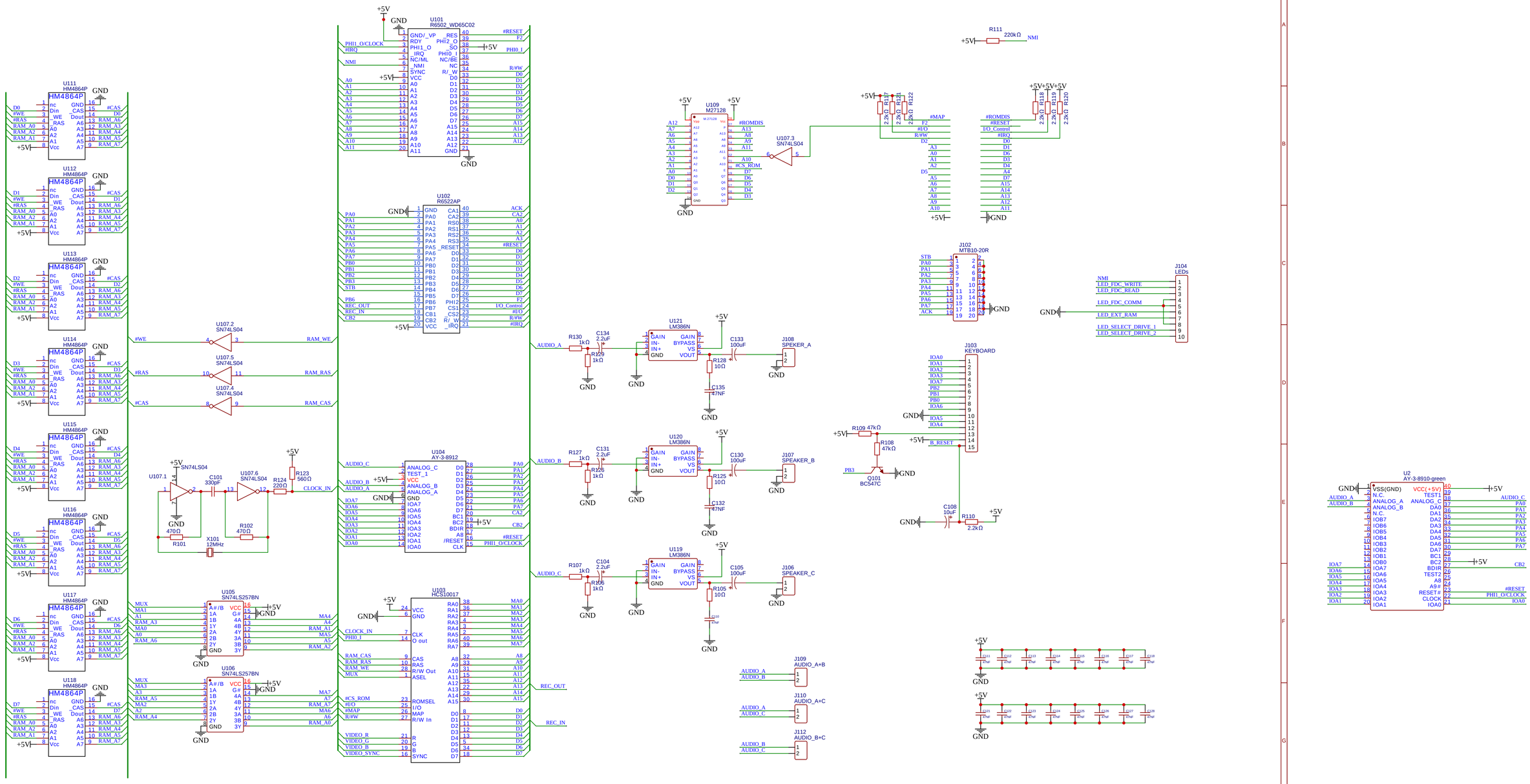

TITLE: PRAVETZ-8D Main Logic

REV: 4.0

Company: GreenHamr

Sheet: 1/1

Date: 2024-09-20

Drawn By: GreenHamr

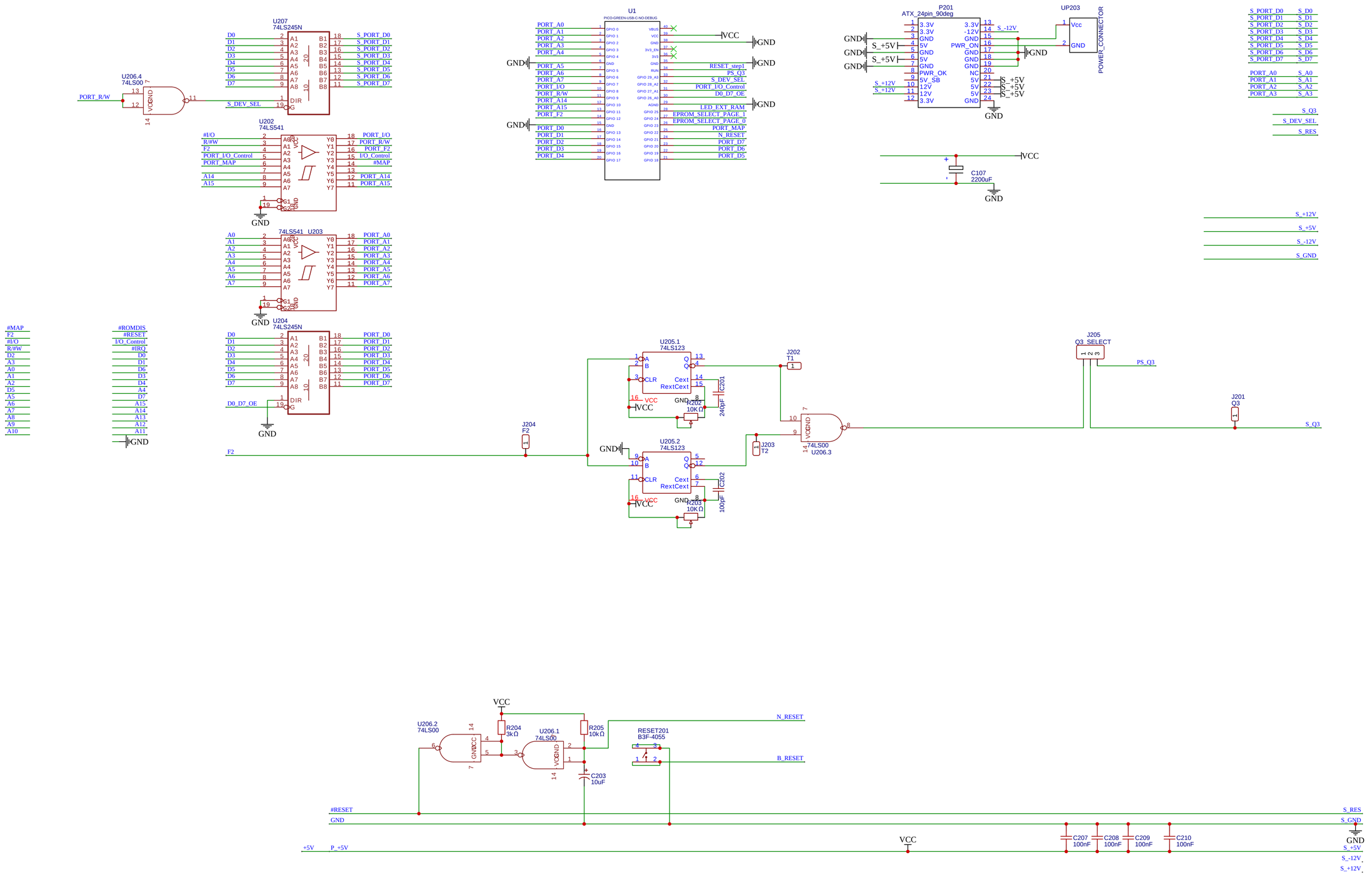

TITLE: I/O Logic	REV: 4.0
Company: GreenHamr	Sheet: 1/1
Date: 2024-09-24 Drawn By: GreenHamr	

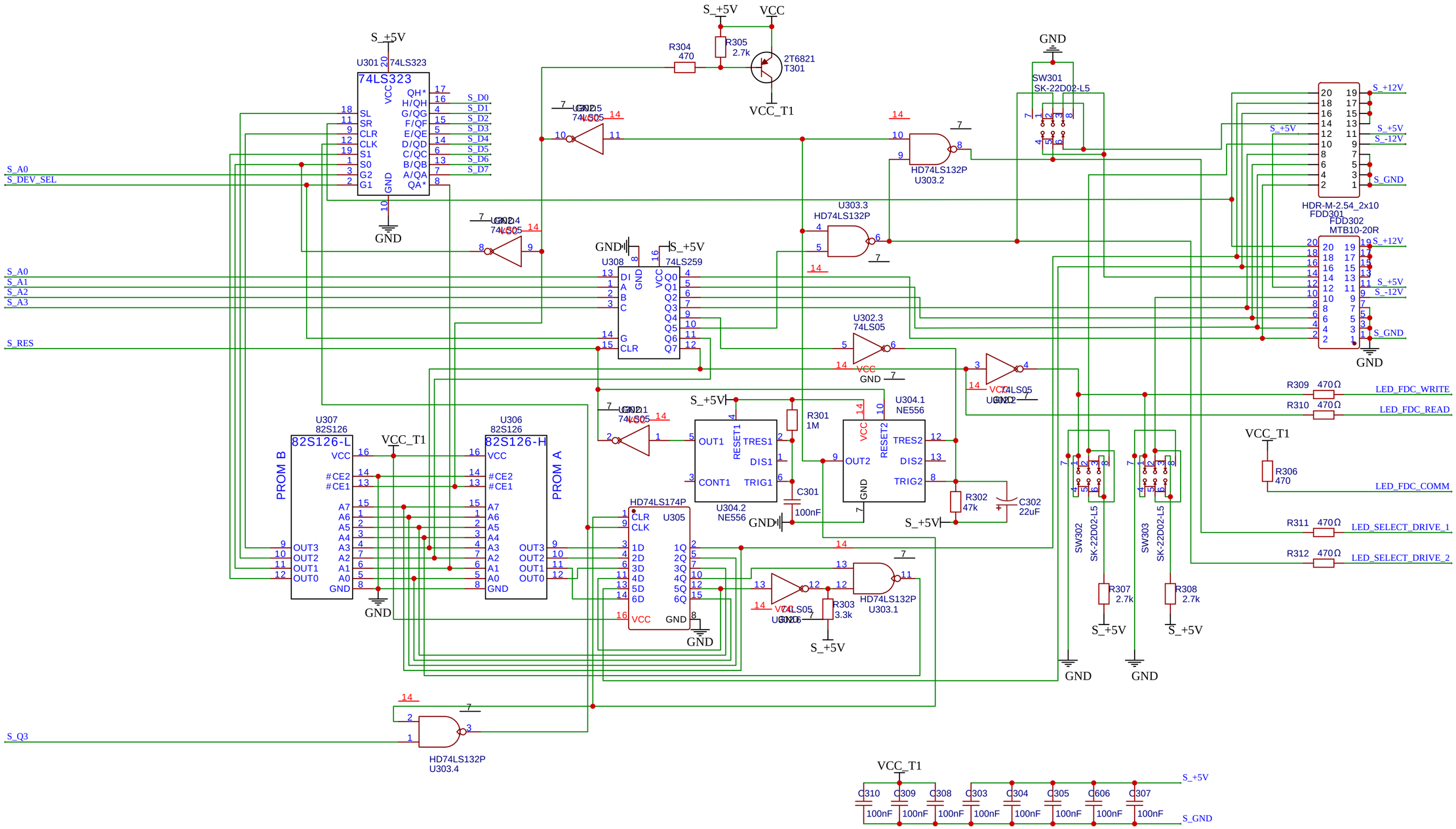

TITLE: FDC	REV: 4.0
Company: GreenHamr	Sheet: 1/1
Date: 2024-09-30 Drawn By: GreenHamr	

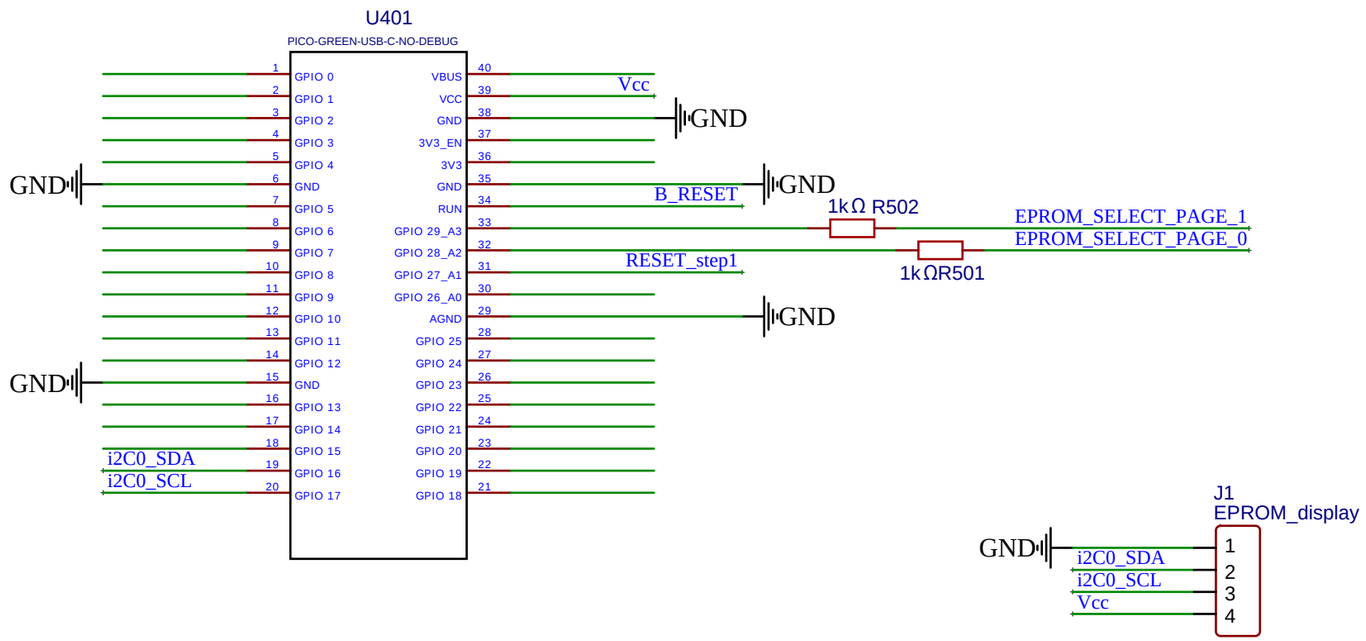

TITLE: EPROM Module		REV: 4.0
	Company: GreenHamr	Sheet: 1/1
	Date: 2024-10-09 Drawn By: GreenHamr	