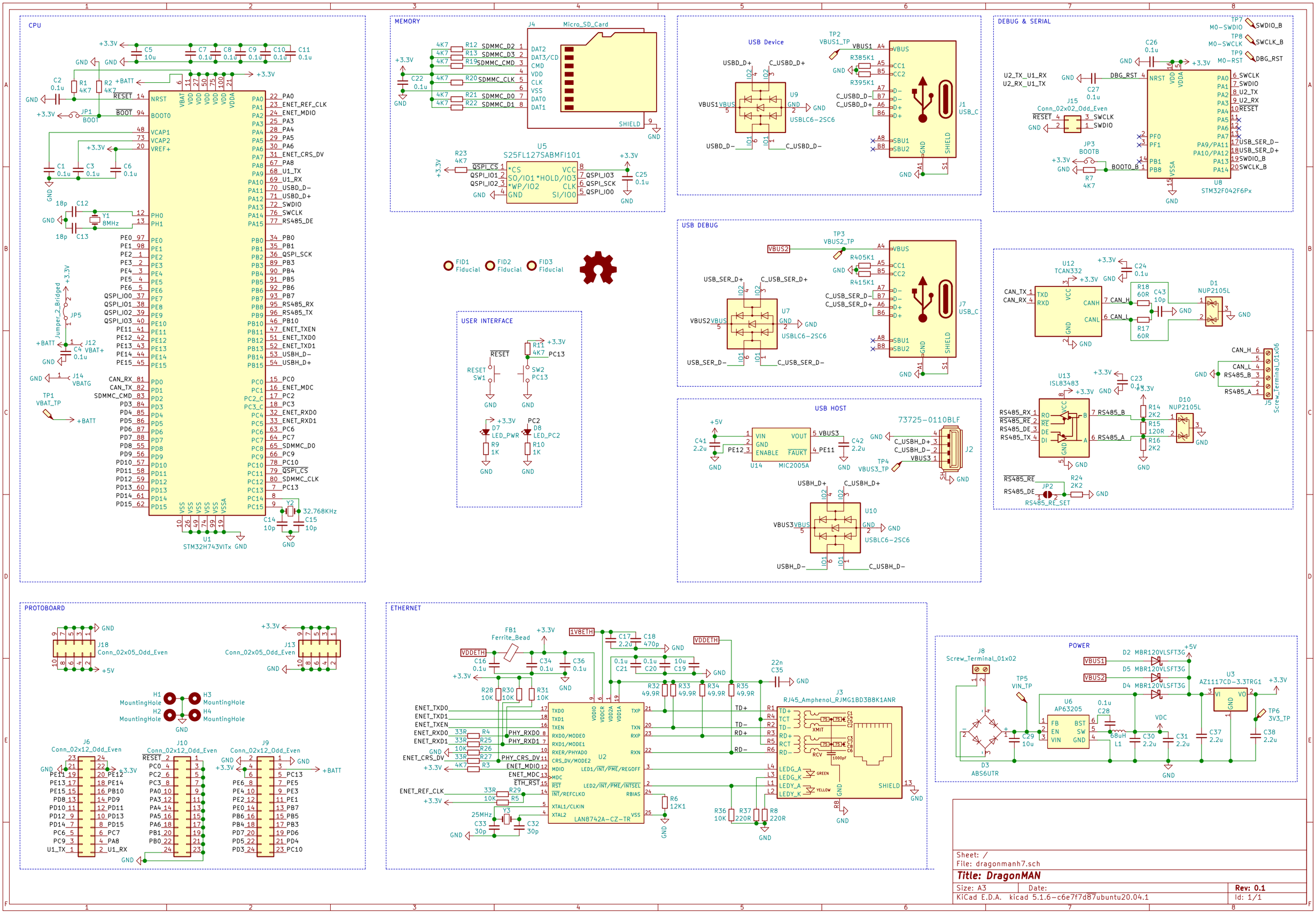
CPU
U1
STM32H743VITx
MEMORY
J4
Micro_SD_Card
U5
S25FL127SABMFI101
USB Device
U9
USBLC6-2SC6
J1
USB_C
DEBUG & SERIAL
U8
STM32F042F6Px
J15
Conn_02x02_Odd_Even
JP3
BOOTB
USB DEBUG
U7
USBLC6-2SC6
J7
USB_C
USB INTERFACE
USB HOST
U14
MIC2005A
J2
73725-0110BLF
U10
USBLC6-2SC6
U12
TCAN332
U13
ISL83483
D1
NUP2105L
D10
NUP2105L
J5
Screw_Terminal_01x06
PROTOBOARD
J18
Conn_02x05_Odd_Even
J13
Conn_02x05_Odd_Even
J6
Conn_02x12_Odd_Even
J10
Conn_02x12_Odd_Even
J9
Conn_02x12_Odd_Even
ETHERNET
U2
LAN8742A-CZ-TR
J3
RJ45_Amphenol_RJMG1BD3B8K1ANR
POWER
J8
Screw_Terminal_01x02
D3
ABS6UTR
U6
AP63205
U3
AZ1117CD-3.3TRG1
Sheet: /
File: dragonmanh7.sch
Title: DragonMAN
Size: A3
Date:
Rev: 0.1
KiCad E.D.A. kicad 5.1.6-c6e7f7d87ubuntu20.04.1
Id: 1/1