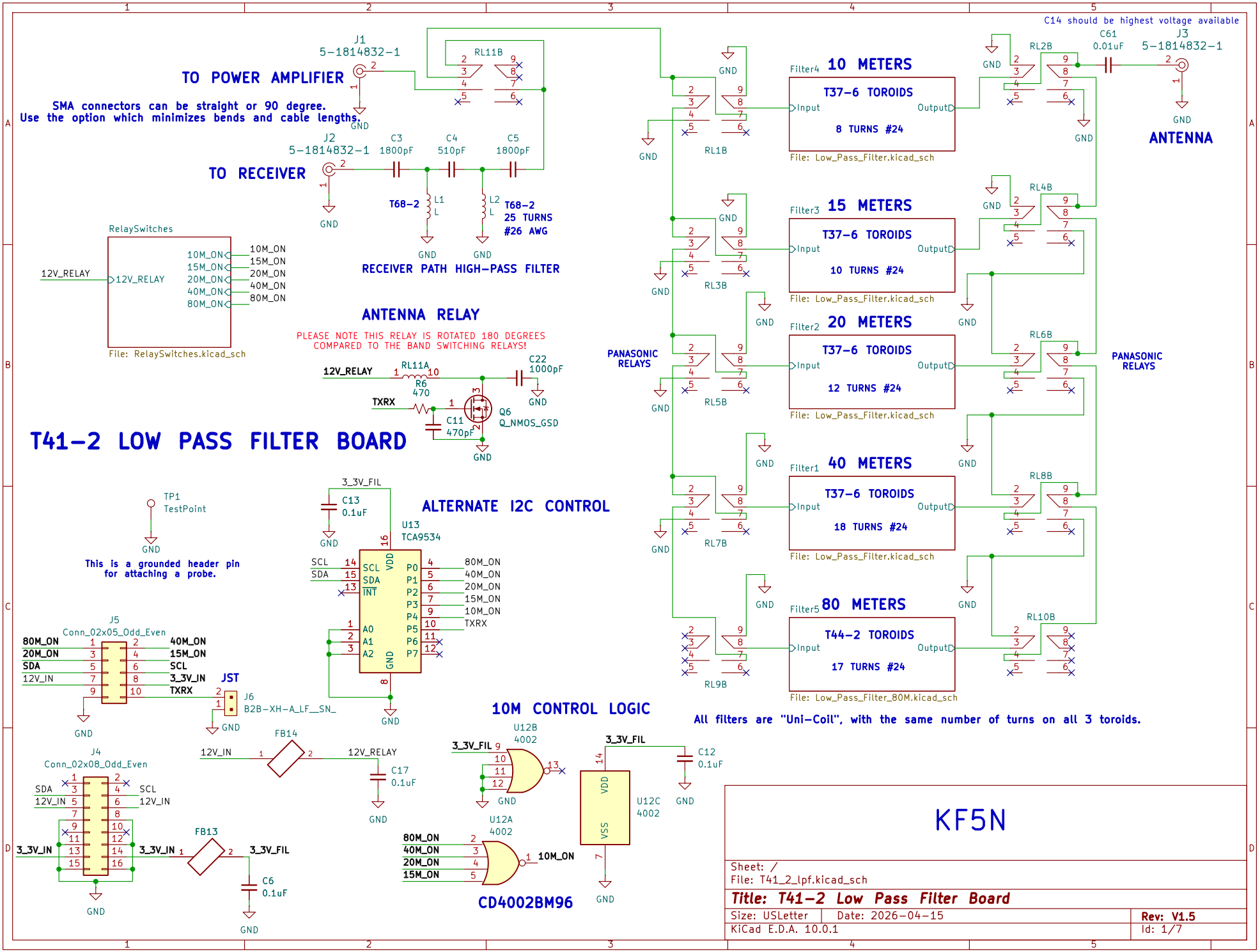
TO POWER AMPLIFIER
J1
5-1814832-1
SMA connectors can be straight or 90 degree.
Use the option which minimizes bends and cable lengths.
TO RECEIVER
J2
5-1814832-1
C3
1800pF
C4
510pF
C5
1800pF
T68-2
L1
L
L2
L
T68-2
25 TURNS
#26 AWG
RECEIVER PATH HIGH-PASS FILTER
RelaySwitches
12V_RELAY
10M_ON
15M_ON
20M_ON
40M_ON
80M_ON
File: RelaySwitches.kicad_sch
ANTENNA RELAY
PLEASE NOTE THIS RELAY IS ROTATED 180 DEGREES
COMPARED TO THE BAND SWITCHING RELAYS!
RL11A
R6
470
C22
1000pF
TXRX
C11
470pF
Q6
Q_NMOS_GSD
T41-2 LOW PASS FILTER BOARD
TP1
TestPoint
This is a grounded header pin
for attaching a probe.
3_3V_FIL
C13
0.1uF
ALTERNATE I2C CONTROL
U13
TCA9534
SCL
SDA
INT
VDD
P0
P1
P2
P3
P4
P5
P6
P7
A0
A1
A2
GND
80M_ON
40M_ON
20M_ON
15M_ON
10M_ON
TXRX
J5
Conn_02x05_Odd_Even
80M_ON
20M_ON
SDA
12V_IN
40M_ON
15M_ON
SCL
3_3V_IN
TXRX
JST
J6
B2B-XH-A_LF__SN_
J4
Conn_02x08_Odd_Even
SDA
12V_IN
SCL
12V_IN
3_3V_IN
3_3V_IN
FB14
12V_IN
12V_RELAY
C17
0.1uF
FB13
3_3V_FIL
C6
0.1uF
10M CONTROL LOGIC
U12B
4002
3_3V_FIL
U12A
4002
80M_ON
40M_ON
20M_ON
15M_ON
10M_ON
CD4002BM96
U12C
4002
3_3V_FIL
C12
0.1uF
PANASONIC
RELAYS
RL1B
RL3B
RL5B
RL7B
RL9B
Filter4
10 METERS
T37-6 TOROIDS
Input
Output
8 TURNS #24
File: Low_Pass_Filter.kicad_sch
Filter3
15 METERS
T37-6 TOROIDS
10 TURNS #24
File: Low_Pass_Filter.kicad_sch
Filter2
20 METERS
T37-6 TOROIDS
12 TURNS #24
File: Low_Pass_Filter.kicad_sch
Filter1
40 METERS
T37-6 TOROIDS
18 TURNS #24
File: Low_Pass_Filter.kicad_sch
Filter5
80 METERS
T44-2 TOROIDS
17 TURNS #24
File: Low_Pass_Filter_80M.kicad_sch
RL2B
RL4B
RL6B
RL8B
RL10B
C14 should be highest voltage available
C61
0.01uF
J3
5-1814832-1
ANTENNA
All filters are "Uni-Coil", with the same number of turns on all 3 toroids.
KF5N
Sheet: /
File: T41_2_lpf.kicad_sch
Title: T41-2 Low Pass Filter Board
Size: USLetter
Date: 2026-04-15
Rev: V1.5
KiCad E.D.A. 10.0.1
Id: 1/7

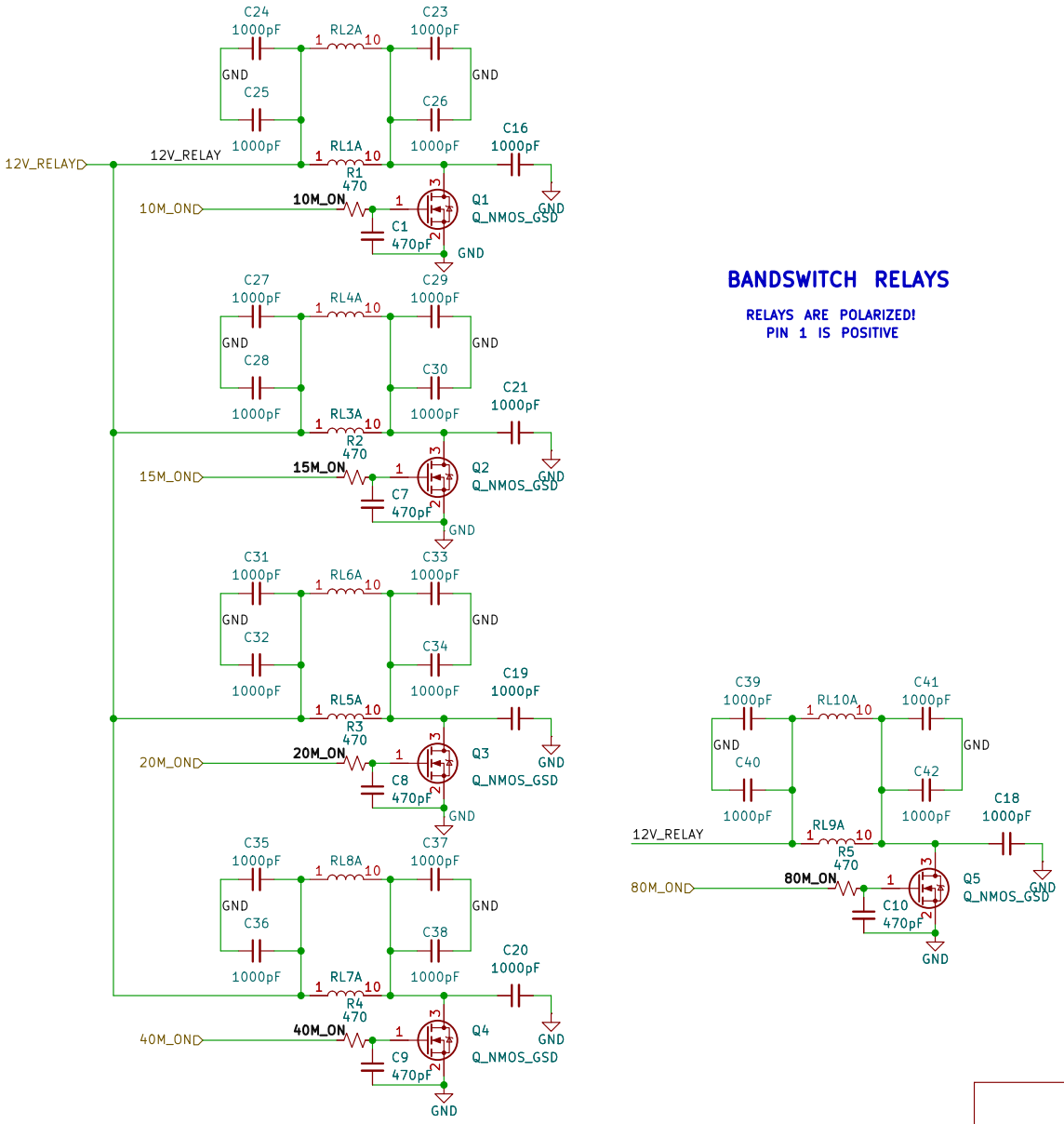

Sheet: /RelaySwitches/
File: RelaySwitches.kicad_sch

Title:

Size: A4	Date:	Rev:
KiCad E.D.A. 10.0.1		Id: 2/7

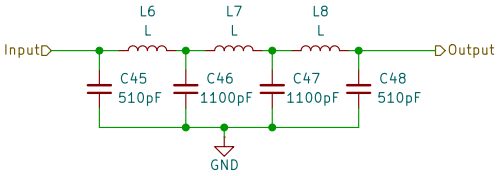

Sheet: /Filter1/
File: Low_Pass_Filter.kicad_sch

Title:

Size: A4	Date:	**Rev:**
KiCad E.D.A. 10.0.1		Id: 4/7

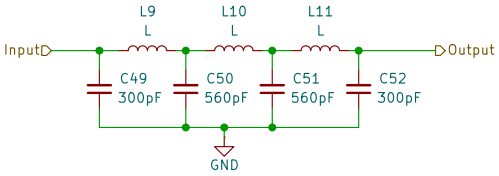

Sheet: /Filter2/
File: Low_Pass_Filter.kicad_sch

Title:

Size: A4	Date:	**Rev:**
KiCad E.D.A. 10.0.1		Id: 5/7

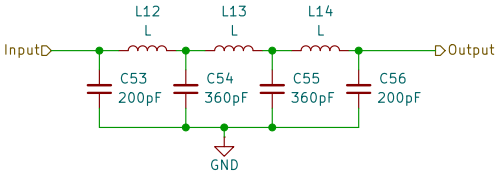

Sheet: /Filter3/
File: Low_Pass_Filter.kicad_sch

Title:

Size: A4	Date:	**Rev:**
KiCad E.D.A. 10.0.1		Id: 6/7

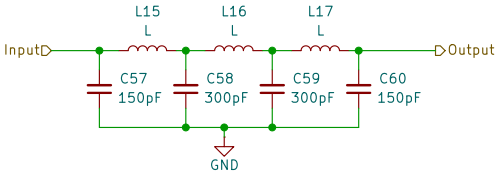

Sheet: /Filter4/
File: Low_Pass_Filter.kicad_sch

Title:

Size: A4	Date:	**Rev:**
KiCad E.D.A. 10.0.1		Id: 7/7

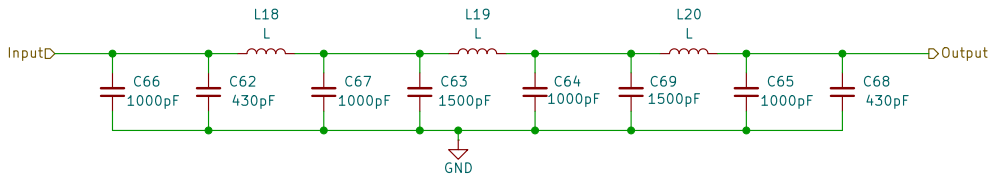

Sheet: /Filter5/
File: Low_Pass_Filter_80M.kicad_sch

Title:

Size: A4	Date:	**Rev:**
KiCad E.D.A. 10.0.1		Id: 8/7