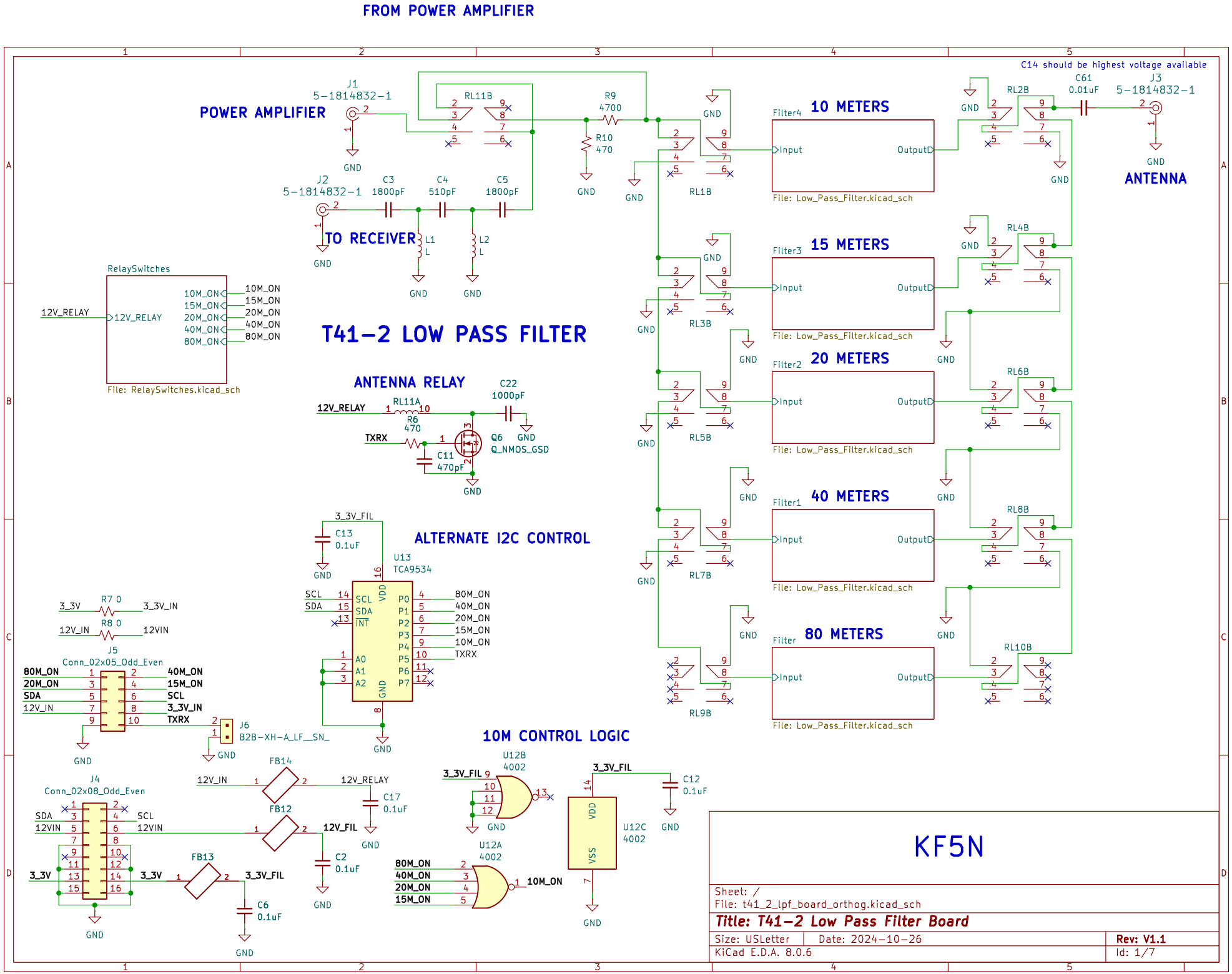
FROM POWER AMPLIFIER
POWER AMPLIFIER
J1
5-1814832-1
RL11B
R9
4700
R10
470
GND
J2
5-1814832-1
C3
1800pF
C4
510pF
C5
1800pF
TO RECEIVER
L1
L
L2
L
T41-2 LOW PASS FILTER
RelaySwitches
12V_RELAY
10M_ON
15M_ON
20M_ON
40M_ON
80M_ON
File: RelaySwitches.kicad_sch
ANTENNA RELAY
RL11A
R6
470
TXRX
C11
470pF
C22
1000pF
Q6
Q_NMOS_GSD
ALTERNATE I2C CONTROL
3_3V_FIL
C13
0.1uF
U13
TCA9534
SCL
SDA
INT
VDD
P0
P1
P2
P3
P4
P5
P6
P7
A0
A1
A2
3_3V
R7 0
3_3V_IN
12V_IN
R8 0
12VIN
J5
Conn_02x05_Odd_Even
40M_ON
15M_ON
3_3V_IN
J6
B2B-XH-A_LF__SN_
J4
Conn_02x08_Odd_Even
FB14
FB12
FB13
C17
0.1uF
C2
0.1uF
C6
0.1uF
3_3V
10M CONTROL LOGIC
U12B
4002
U12A
4002
U12C
4002
VSS
C12
0.1uF
10M_ON
Filter4
10 METERS
Filter3
15 METERS
Filter2
20 METERS
Filter1
40 METERS
Filter
80 METERS
Input
Output
File: Low_Pass_Filter.kicad_sch
RL1B
RL3B
RL5B
RL7B
RL9B
RL2B
RL4B
RL6B
RL8B
RL10B
C14 should be highest voltage available
C61
0.01uF
J3
5-1814832-1
ANTENNA
KF5N
Sheet: /
File: t41_2_lpf_board_orthog.kicad_sch
Title: T41-2 Low Pass Filter Board
Size: USLetter
Date: 2024-10-26
Rev: V1.1
KiCad E.D.A. 8.0.6
Id: 1/7

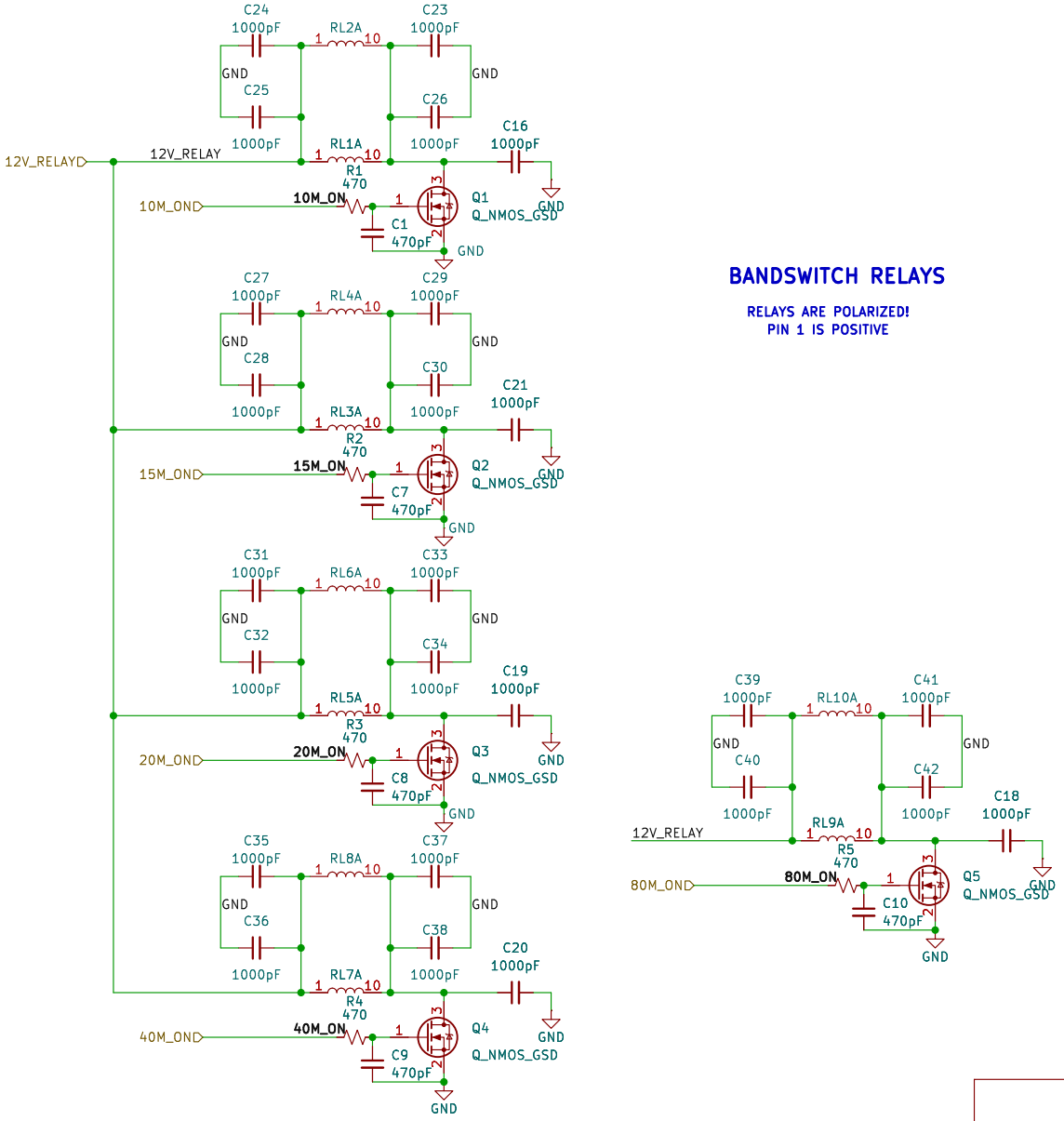

Sheet: /RelaySwitches/
File: RelaySwitches.kicad_sch

Title:

Size: A4	Date:	Rev:
KiCad E.D.A. 8.0.6		Id: 2/7

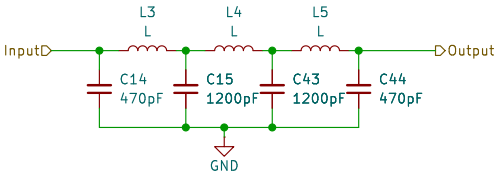

Sheet: /Filter/
File: Low_Pass_Filter.kicad_sch

Title:

Size: A4	Date:	**Rev:**
KiCad E.D.A. 8.0.6		Id: 3/7

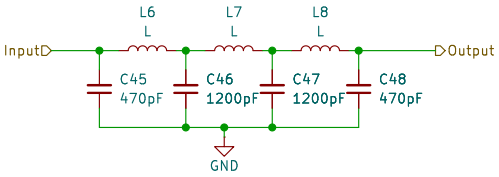

Sheet: /Filter1/
File: Low_Pass_Filter.kicad_sch

Title:

Size: A4	Date:	**Rev:**
KiCad E.D.A. 8.0.6		Id: 4/7

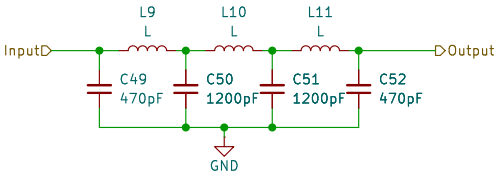

Sheet: /Filter2/
File: Low_Pass_Filter.kicad_sch

Title:

Size: A4	Date:	**Rev:**
KiCad E.D.A. 8.0.6		Id: 5/7

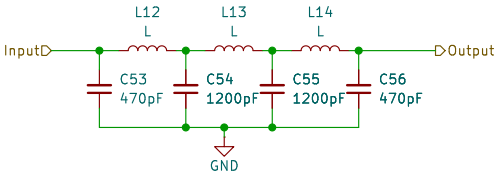

Sheet: /Filter3/
File: Low_Pass_Filter.kicad_sch

Title:

Size: A4	Date:	**Rev:**
KiCad E.D.A. 8.0.6		Id: 6/7

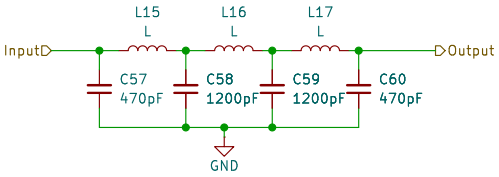

Sheet: /Filter4/
File: Low_Pass_Filter.kicad_sch

Title:

Size: A4	Date:	**Rev:**
KiCad E.D.A. 8.0.6		Id: 7/7