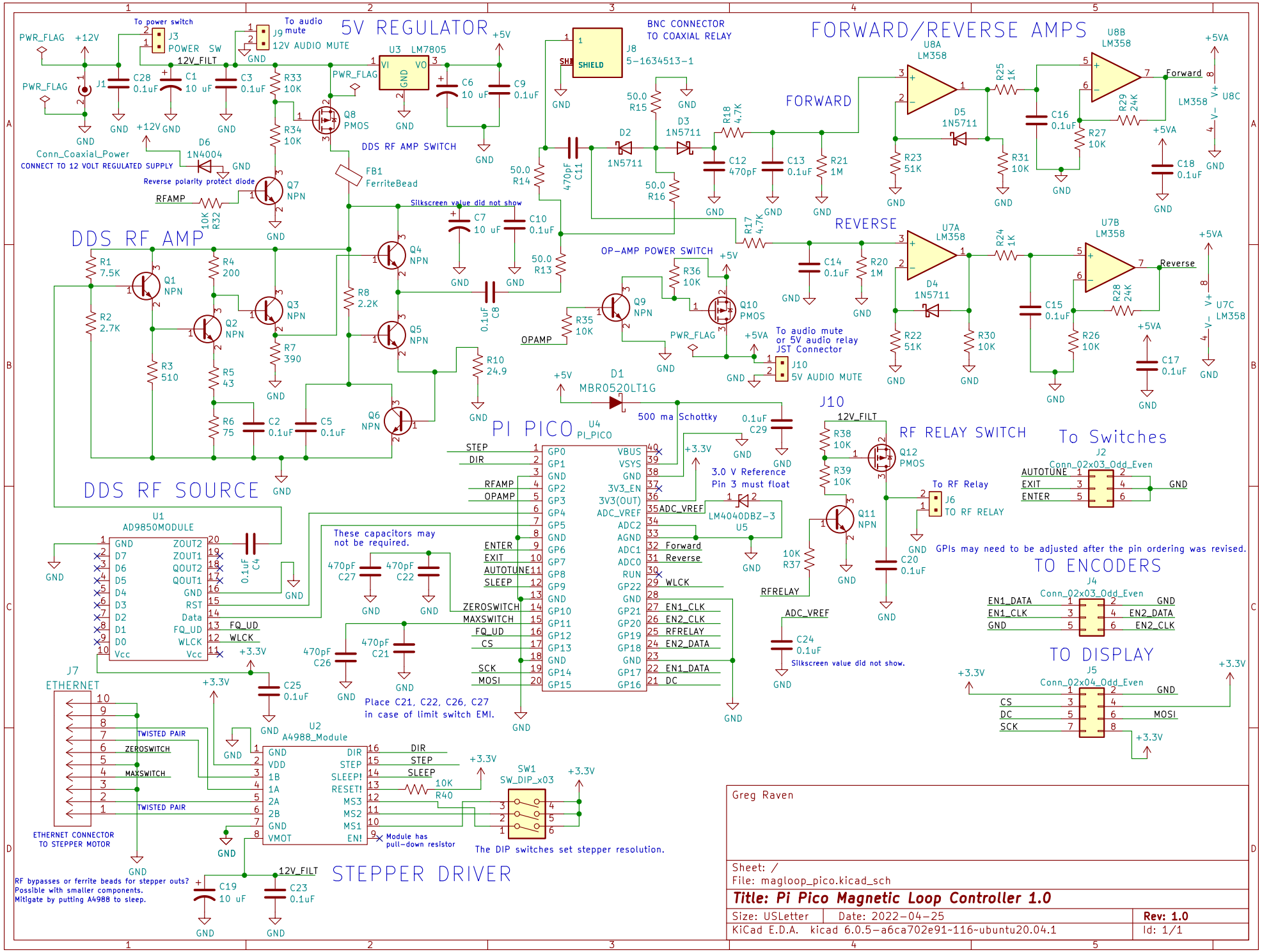
5V REGULATOR
U3 LM7805
J3 POWER SW
To power switch
J9 12V AUDIO MUTE
To audio mute
12V_FILT
PWR_FLAG
+12V
J1
Conn_Coaxial_Power
CONNECT TO 12 VOLT REGULATED SUPPLY
D6 1N4004
Reverse polarity protect diode
Q8 PMOS
Q7 NPN
RFAMP
DDS RF AMP SWITCH
FB1 FerriteBead
BNC CONNECTOR TO COAXIAL RELAY
J8 5-1634513-1
SHIELD
FORWARD/REVERSE AMPS
U8A LM358
U8B LM358
U8C LM358
U7A LM358
U7B LM358
U7C LM358
FORWARD
REVERSE
D5 1N5711
D4 1N5711
D2 1N5711
D3 1N5711
Forward
Reverse
+5VA
DDS RF AMP
Q1 NPN
Q2 NPN
Q3 NPN
Q4 NPN
Q5 NPN
Q6 NPN
Silkscreen value did not show
OP-AMP POWER SWITCH
Q9 NPN
Q10 PMOS
OPAMP
To audio mute or 5V audio relay JST Connector
J10 5V AUDIO MUTE
D1 MBR0520LT1G
500 ma Schottky
PI PICO
U4 PI_PICO
3.0 V Reference Pin 3 must float
LM4040DBZ-3 U5
ADC_VREF
Forward
Reverse
WLCK
EN1_CLK
EN2_CLK
RFRELAY
EN2_DATA
EN1_DATA
DC
STEP
DIR
RFAMP
OPAMP
ENTER
EXIT
AUTOTUNE
SLEEP
ZEROSWITCH
MAXSWITCH
FQ_UD
CS
SCK
MOSI
RF RELAY SWITCH
Q12 PMOS
Q11 NPN
To RF Relay
J6 TO RF RELAY
GPIs may need to be adjusted after the pin ordering was revised.
To Switches
J2 Conn_02x03_Odd_Even
AUTOTUNE
EXIT
ENTER
TO ENCODERS
J4 Conn_02x03_Odd_Even
EN1_DATA
EN1_CLK
EN2_DATA
EN2_CLK
TO DISPLAY
J5 Conn_02x04_Odd_Even
CS
DC
SCK
MOSI
DDS RF SOURCE
U1 AD9850MODULE
ZOUT2
ZOUT1
QOUT2
QOUT1
RST
Data
FQ_UD
WLCK
Vcc
These capacitors may not be required.
Place C21, C22, C26, C27 in case of limit switch EMI.
J7 ETHERNET
ETHERNET CONNECTOR TO STEPPER MOTOR
TWISTED PAIR
ZEROSWITCH
MAXSWITCH
U2 A4988_Module
DIR
STEP
SLEEP!
RESET!
MS3
MS2
MS1
EN!
VMOT
Module has pull-down resistor
SW1 SW_DIP_x03
The DIP switches set stepper resolution.
STEPPER DRIVER
RF bypasses or ferrite beads for stepper outs?
Possible with smaller components.
Mitigate by putting A4988 to sleep.
Greg Raven
Sheet: /
File: magloop_pico.kicad_sch
Title: Pi Pico Magnetic Loop Controller 1.0
Size: USLetter
Date: 2022-04-25
Rev: 1.0
KiCad E.D.A. kicad 6.0.5-a6ca702e91~116~ubuntu20.04.1
Id: 1/1