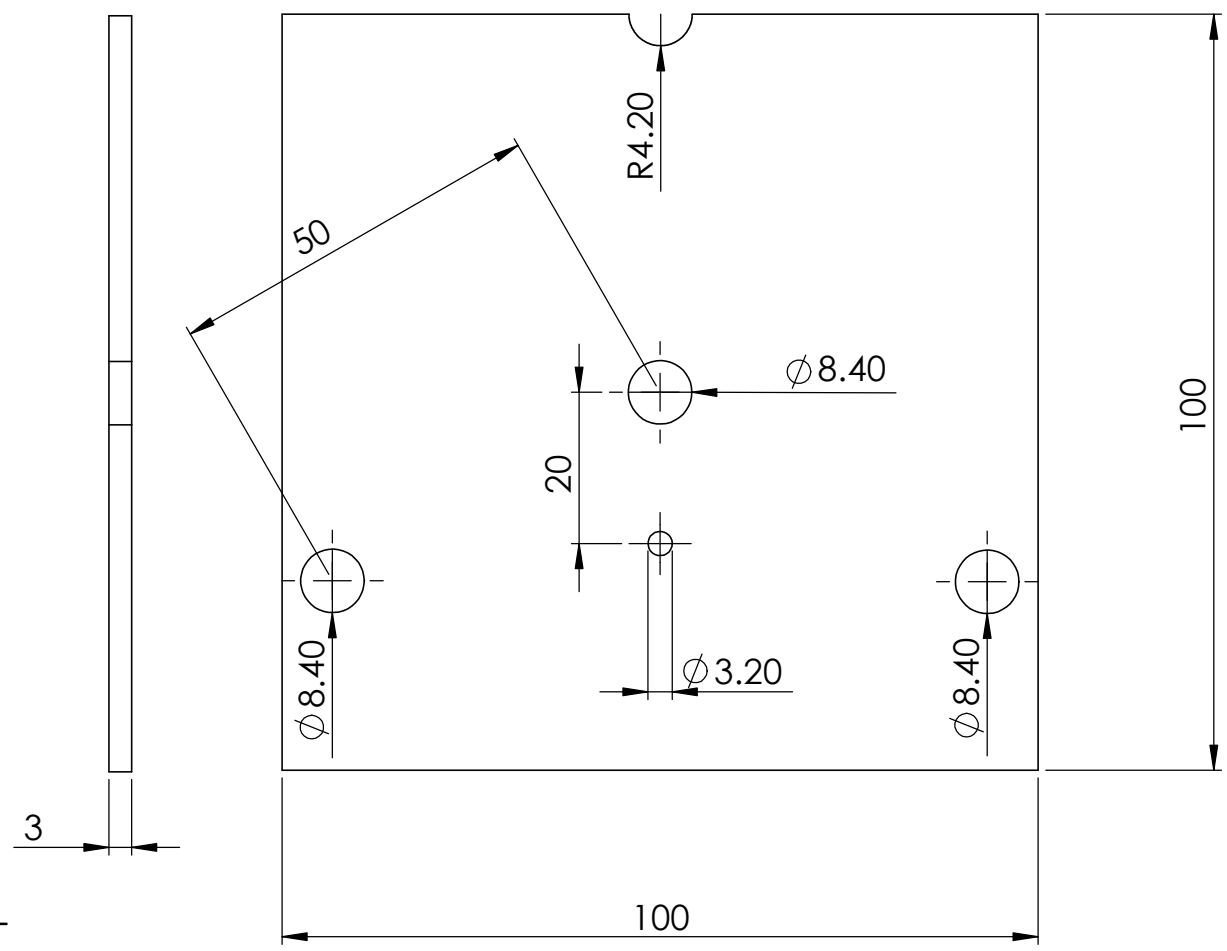

Die Dicke so, dass das Gewicht 500g ist (Volumen für 3mm Dicke: 29393 mm3)

Note: 120 Grad zwischen den Loechern

UNLESS OTHERWISE SPECIFIED: DIMENSIONS ARE IN MILLIMETERS SURFACE FINISH: TOLERANCES: LINEAR: ANGULAR:	FINISH:	DEBURR AND BREAK SHARP EDGES	DO NOT SCALE DRAWING / REVISION

	NAME	SIGNATURE	DATE
DRAWN			
CHK'D			
APPV'D			
MFG			
Q.A			

TITLE:

MATERIAL:

WEIGHT:

DWG NO. 31004_tungsten_balas

A4

SCALE:1 to 1

SHEET 1 OF 1