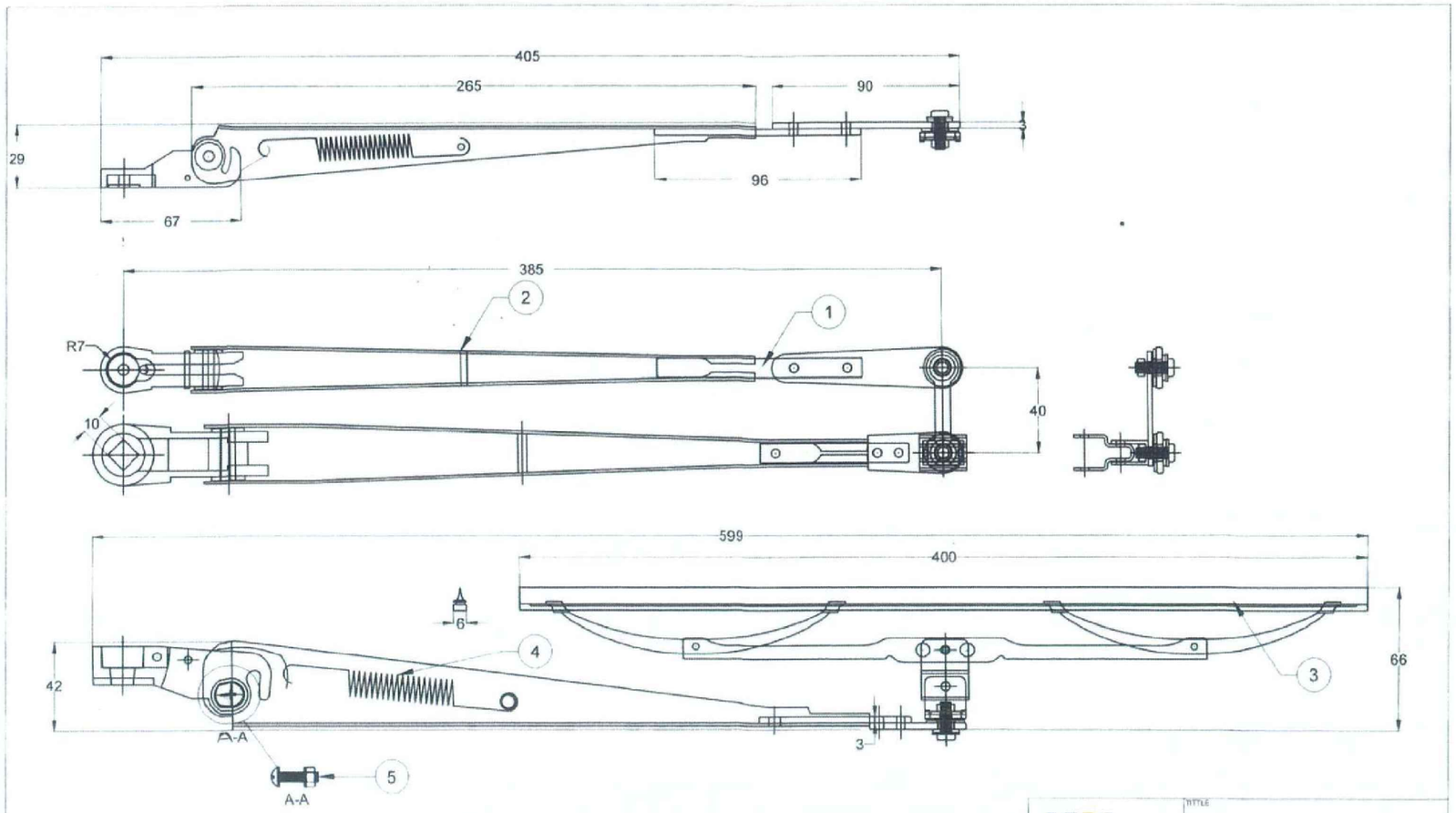

NO	NAME	MATERIAL	QTY
1	STANG WIPER(ARM)	SPHC 1 mm	2
2	STANG WIPER(BASE)	SPHC 1.2 mm	2
3	BLADE	RUBBER	1
4	SPRING	SWPB	2
5	LOCK NUT	SUS304	1

KAI Commuter

TITTLE: WIPER DOUBLE ARM JR 203

DRAWING NUMBER: 002/ST-SC/CTPR/III/2023

TOLERANCE: ±0.5

DATE: 09/03/2023

REVISED: 02

SCALE: N.T.S

UNIT: mm

PAGE: 1 OF 1

APPROVED BY: HEN

CHECKED BY: DONAUS

PREPARED BY: YOGI

0				–	AGS	RON
REV	CONTENS			REVISED BY	CHECKED BY	APPROVED BY
				REVISION : 1	DRAWING MASTER : (APPLICATION TO)
				APPROVED BY : RON 08–05–2024	IMSS
				CHECKED BY : AGS 08–05–2024	TITTLE : WIPER DOUBLE ARM JR 203
1	PT.IMSS	–	–		
NO	ORDER	TYPE	STANDARD	DRAWIN BY : AZS 08–05–2024	ORG DRG NO : –
NO OF SHEET : 1 OF 1			SHEET : 1		
PROJECTION : ISO 128			SCALE : 1 : 1	UNITS (MM)	DRAWING NO. 87.1-5-005