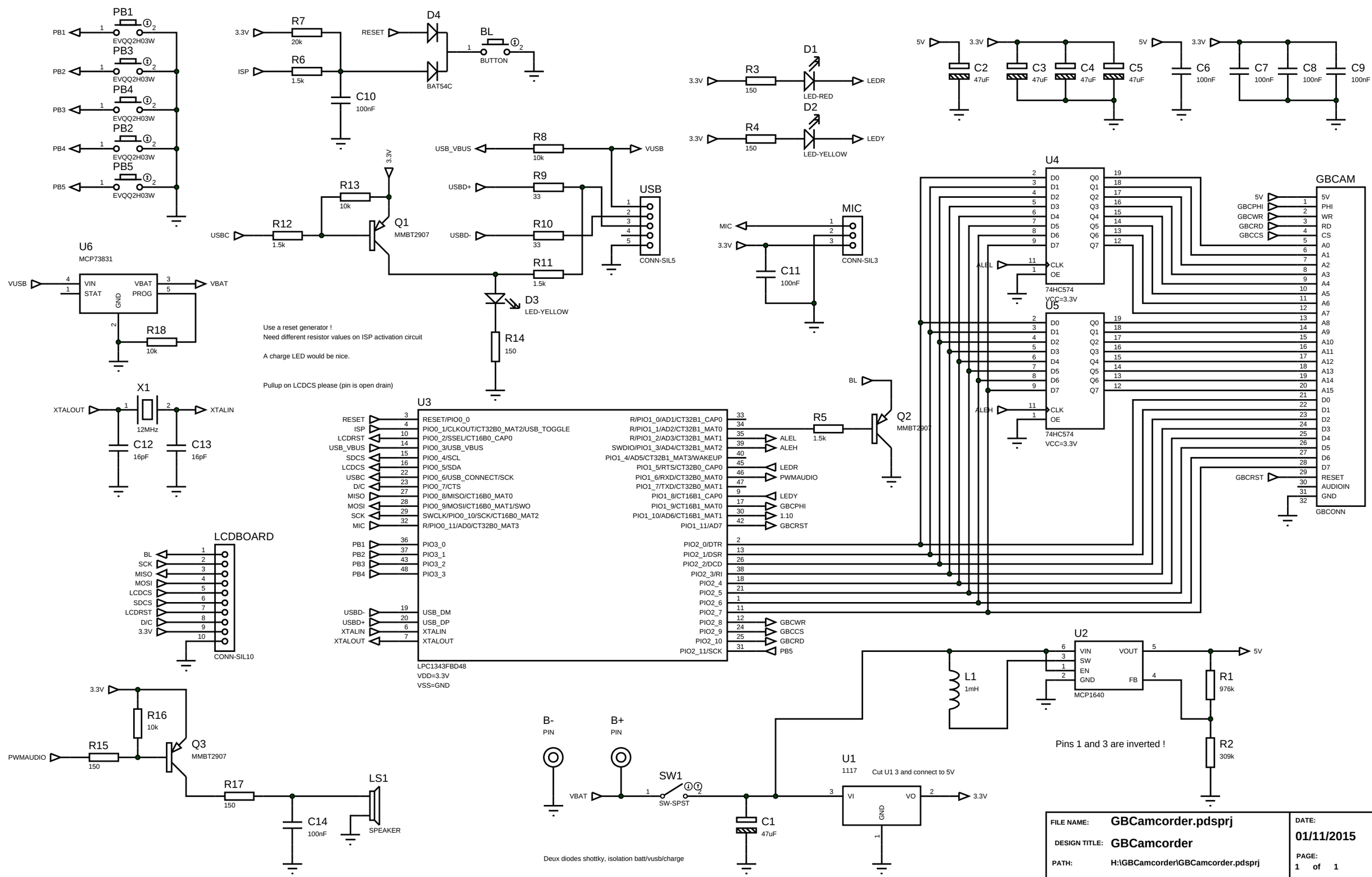
PB1
EVQQ2H03W
PB3
EVQQ2H03W
PB4
EVQQ2H03W
PB2
EVQQ2H03W
PB5
EVQQ2H03W
R7
20k
R6
1.5k
C10
100nF
D4
BAT54C
BL
BUTTON
R3
150
D1
LED-RED
LEDR
R4
150
D2
LED-YELLOW
LEDY
C2
47uF
C3
47uF
C4
47uF
C5
47uF
C6
100nF
C7
100nF
C8
100nF
C9
100nF
R8
10k
VUSB
R9
33
R10
33
R11
1.5k
USB
CONN-SIL5
R13
10k
R12
1.5k
Q1
MMBT2907
D3
LED-YELLOW
R14
150
MIC
CONN-SIL3
C11
100nF
U6
MCP73831
VIN
STAT
VBAT
PROG
GND
R18
10k
Use a reset generator !
Need different resistor values on ISP activation circuit
A charge LED would be nice.
Pullup on LCDCS please (pin is open drain)
X1
12MHz
C12
16pF
C13
16pF
U3
RESET/PIO0_0
PIO0_1/CLKOUT/CT32B0_MAT2/USB_TOGGLE
PIO0_2/SSEL/CT16B0_CAP0
PIO0_3/USB_VBUS
PIO0_4/SCL
PIO0_5/SDA
PIO0_6/USB_CONNECT/SCK
PIO0_7/CTS
PIO0_8/MISO/CT16B0_MAT0
PIO0_9/MOSI/CT16B0_MAT1/SWO
SWCLK/PIO0_10/SCK/CT16B0_MAT2
R/PIO0_11/AD0/CT32B0_MAT3
PIO3_0
PIO3_1
PIO3_2
PIO3_3
USB_DM
USB_DP
XTALIN
XTALOUT
R/PIO1_0/AD1/CT32B1_CAP0
R/PIO1_1/AD2/CT32B1_MAT0
R/PIO1_2/AD3/CT32B1_MAT1
SWDIO/PIO1_3/AD4/CT32B1_MAT2
PIO1_4/AD5/CT32B1_MAT3/WAKEUP
PIO1_5/RTS/CT32B0_CAP0
PIO1_6/RXD/CT32B0_MAT0
PIO1_7/TXD/CT32B0_MAT1
PIO1_8/CT16B1_CAP0
PIO1_9/CT16B1_MAT0
PIO1_10/AD6/CT16B1_MAT1
PIO1_11/AD7
PIO2_0/DTR
PIO2_1/DSR
PIO2_2/DCD
PIO2_3/RI
PIO2_4
PIO2_5
PIO2_6
PIO2_7
PIO2_8
PIO2_9
PIO2_10
PIO2_11/SCK
LPC1343FBD48
VDD=3.3V
VSS=GND
R5
1.5k
Q2
MMBT2907
U4
74HC574
VCC=3.3V
U5
74HC574
VCC=3.3V
GBCAM
GBCONN
LCDBOARD
CONN-SIL10
R16
10k
R15
150
Q3
MMBT2907
R17
150
C14
100nF
LS1
SPEAKER
B-
PIN
B+
PIN
SW1
SW-SPST
C1
47uF
Deux diodes shottky, isolation batt/vusb/charge
U1
1117
Cut U1 3 and connect to 5V
U2
MCP1640
L1
1mH
R1
976k
R2
309k
Pins 1 and 3 are inverted !
FILE NAME: GBCamcorder.pdsprj
DESIGN TITLE: GBCamcorder
PATH: H:\GBCamcorder\GBCamcorder.pdsprj
BY: Sean "furrtek" Gonsalves
REV: 1
DATE: 01/11/2015
PAGE: 1 of 1
TIME: 05:08:45