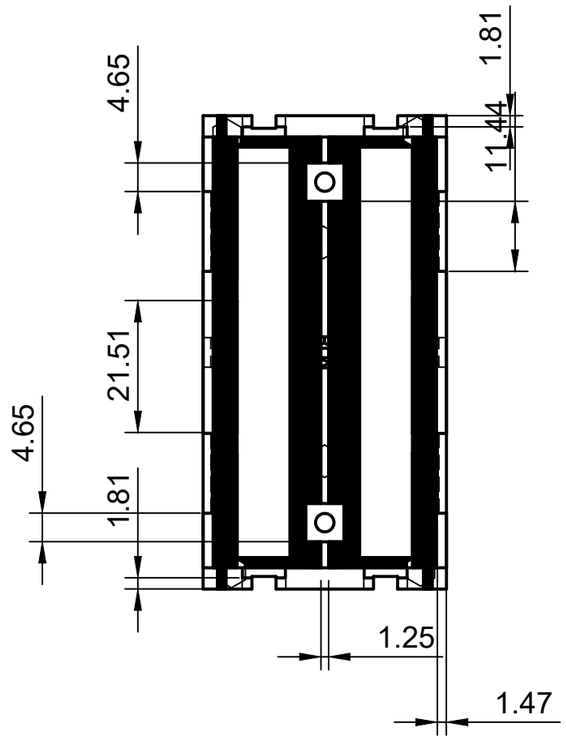

Dept.	Technical reference	Created by Adarsh D 18-06-2025	Approved by
		Document type	Document status
		Title rekon35	DWG No.
			Rev. / Date of issue / Sheet 1/1