Key Findings

- Year on year, 13SURF (in) and Ambo Triple 000 (out) calls have increased to the point where system is under stress and calls have become too time consuming.
- ICEMS will provide faster, more accurate communications from Police to SOC and DOs.
- Information provided will be far broader and to an unprecedented depth eg Customer Service Data (Name, number and address) and AML (Lat/Long, Date and Time of positioning)
- SurfCom architecture is unknown, but it is clear many more fields will need to be added and some standards eg GPS, will need to be altered.
- No material change to SurfCom “skin” once implemented.
- A staged implementation would be preferable to smooth out any issues and minimise disruption to all agencies. EG Stage 1 – NSWPF; Stage 2 – ANSW, Stage 3 - Other Agencies
- NSWPF will require an MOU for initial implementation
- No issues with required VPN for network security and viability.
- Contractor identified who can build ICEMS Engine and Handler (System connections and messaging) for SurfCom
- SLSNSW needs to define its position on whether to invest in an updated SurfCom or move to a new IMS

A Scenario

All 3 agencies are now collaborating via ICEMS

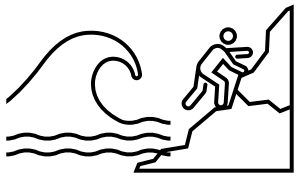

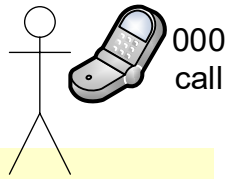

SLSNSW inform closest clubhouse

Ambulance is sent out

Workflow efficiency gains

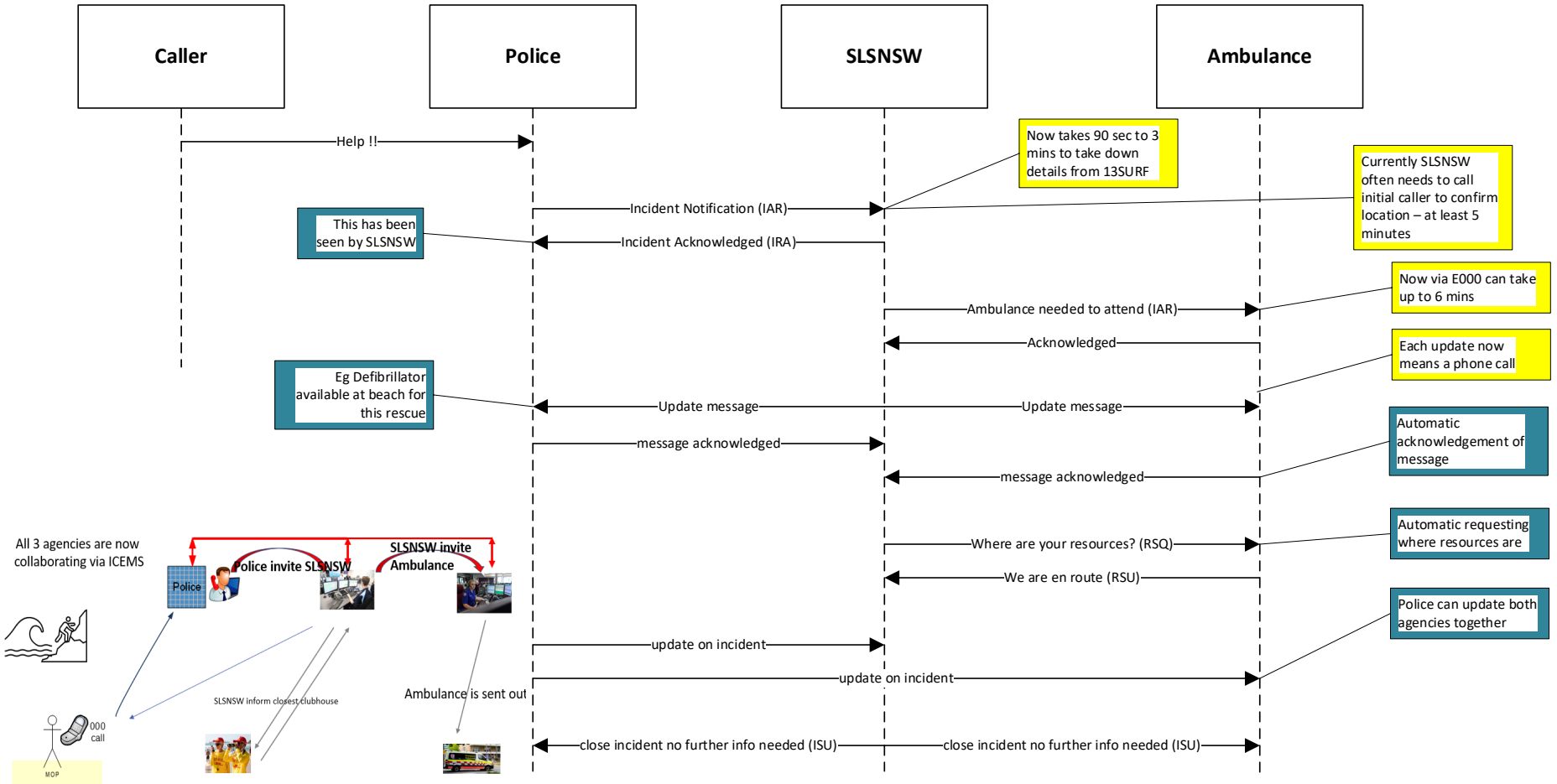

Potential time saved

- 3 minutes
- 8 minutes
- 14 minutes
- 17 minutes

Solution Architecture

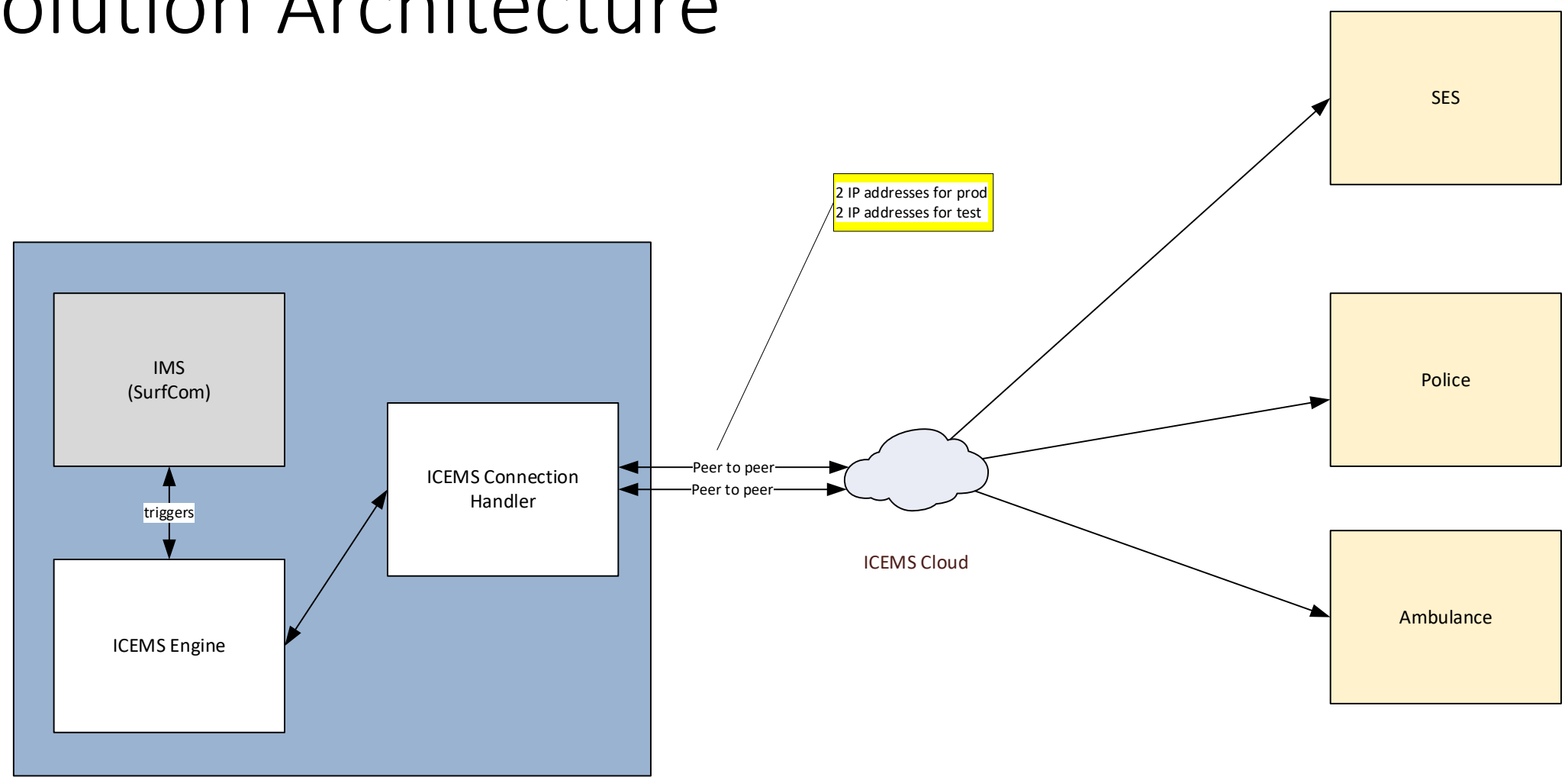

Incoming Incident

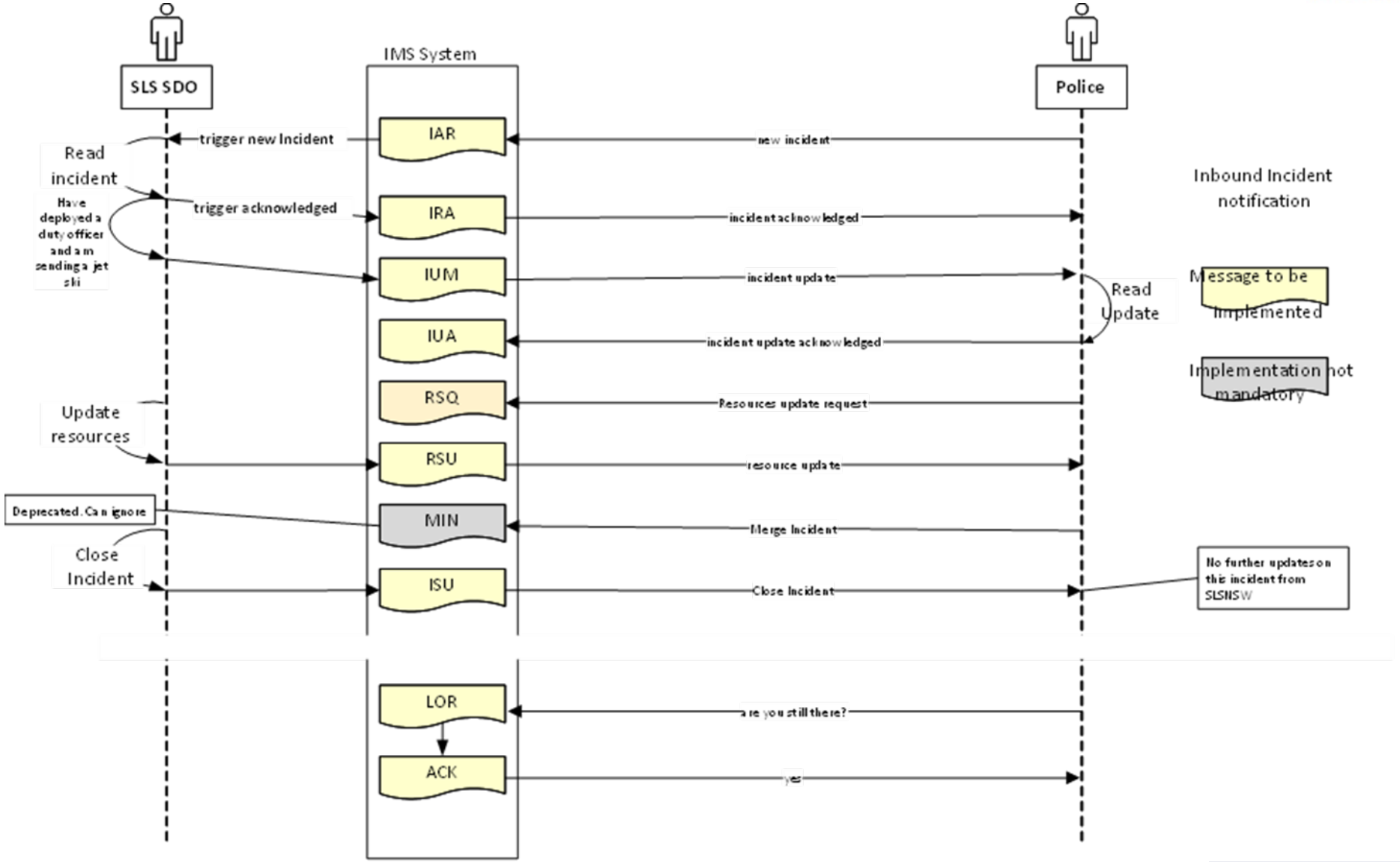

Adding an Agency

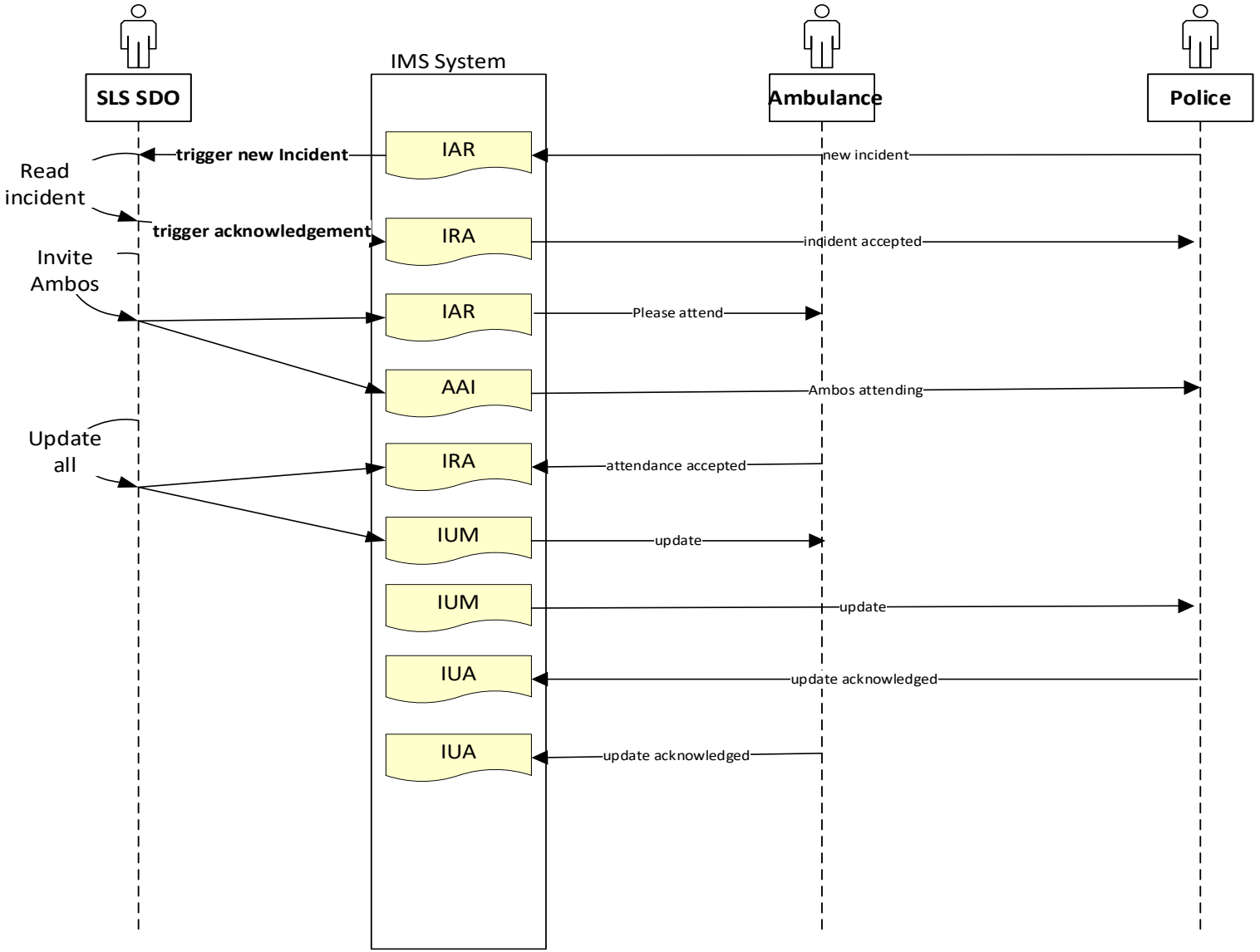

Outbound Incident notification and multiple agency handling

Message to be impmented

Implentation not mandatory

Declining an Incident

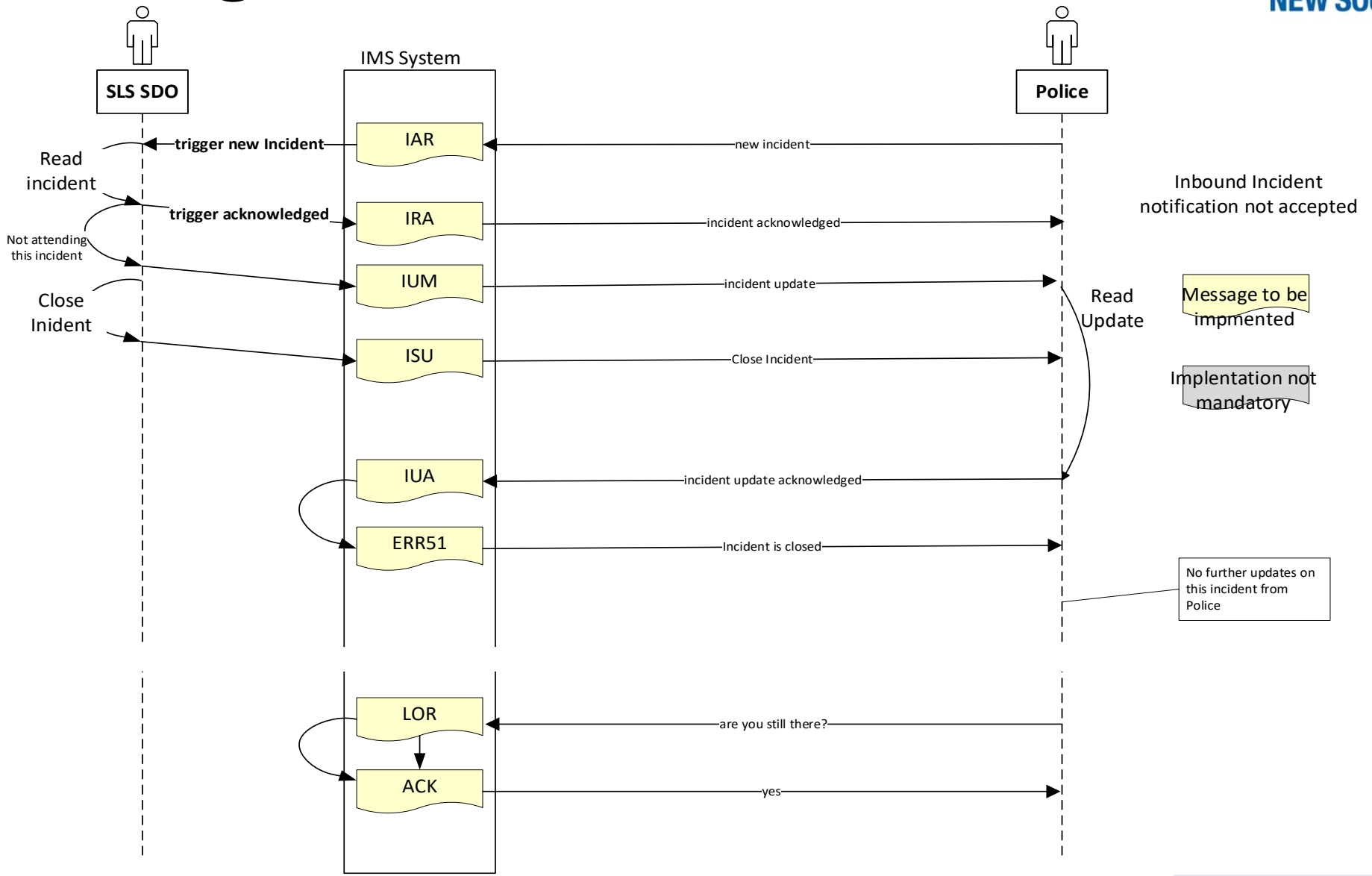

Timed-out Response

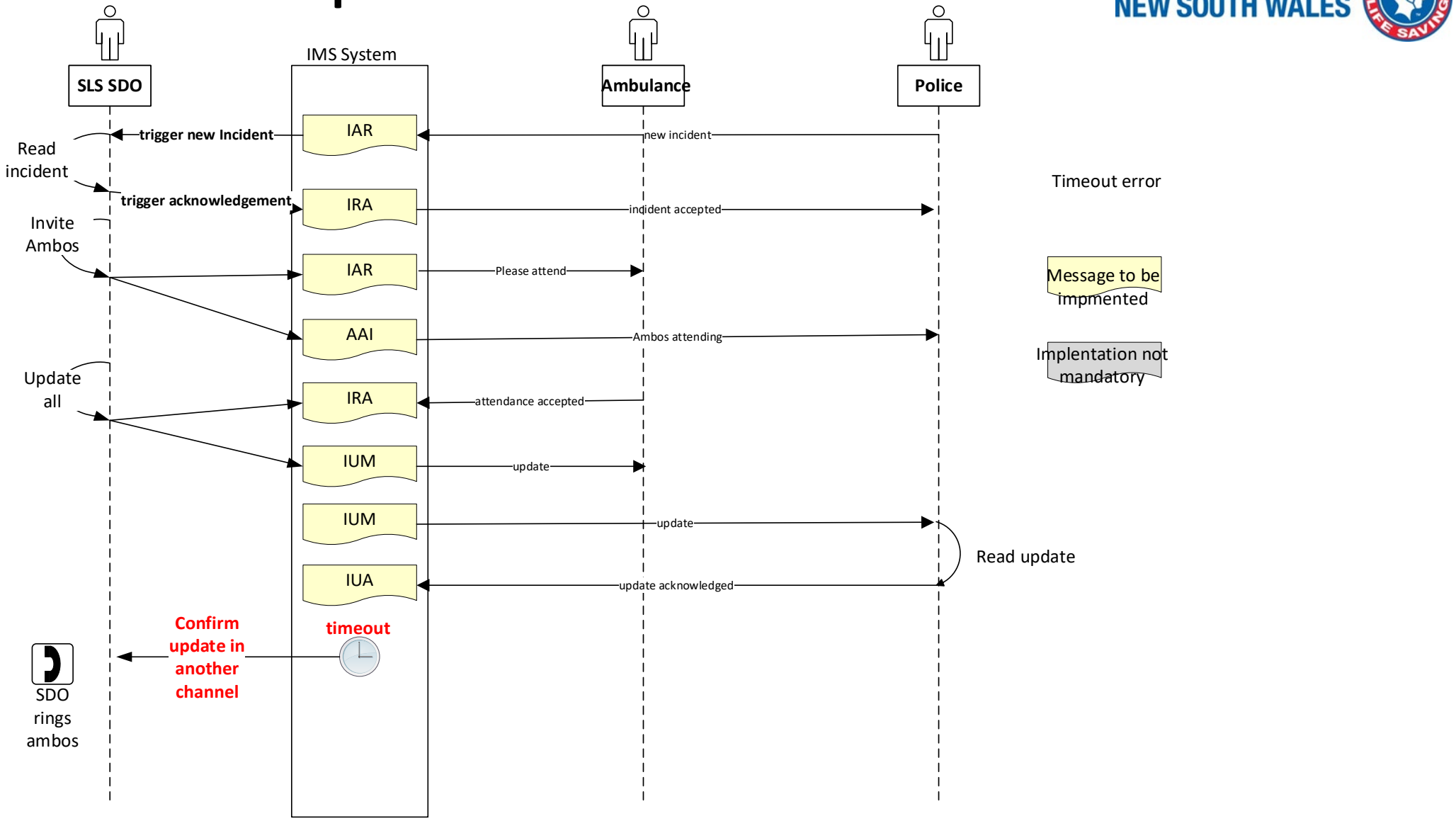

Issue – SLS SOC is unmanned at night
Non-urgent incidents

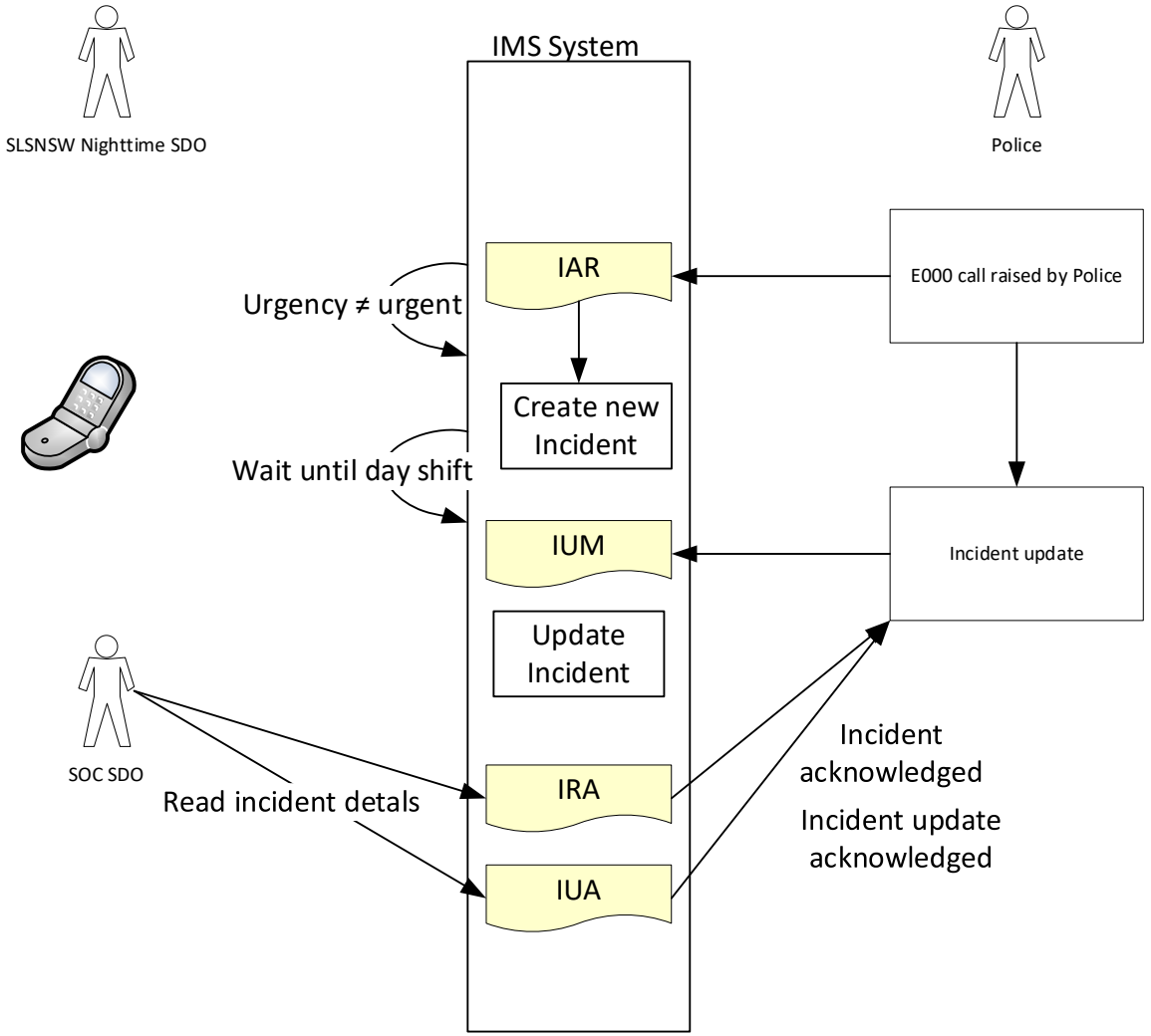

Issue – SLS SOC is unmanned at night
Urgent Incidents

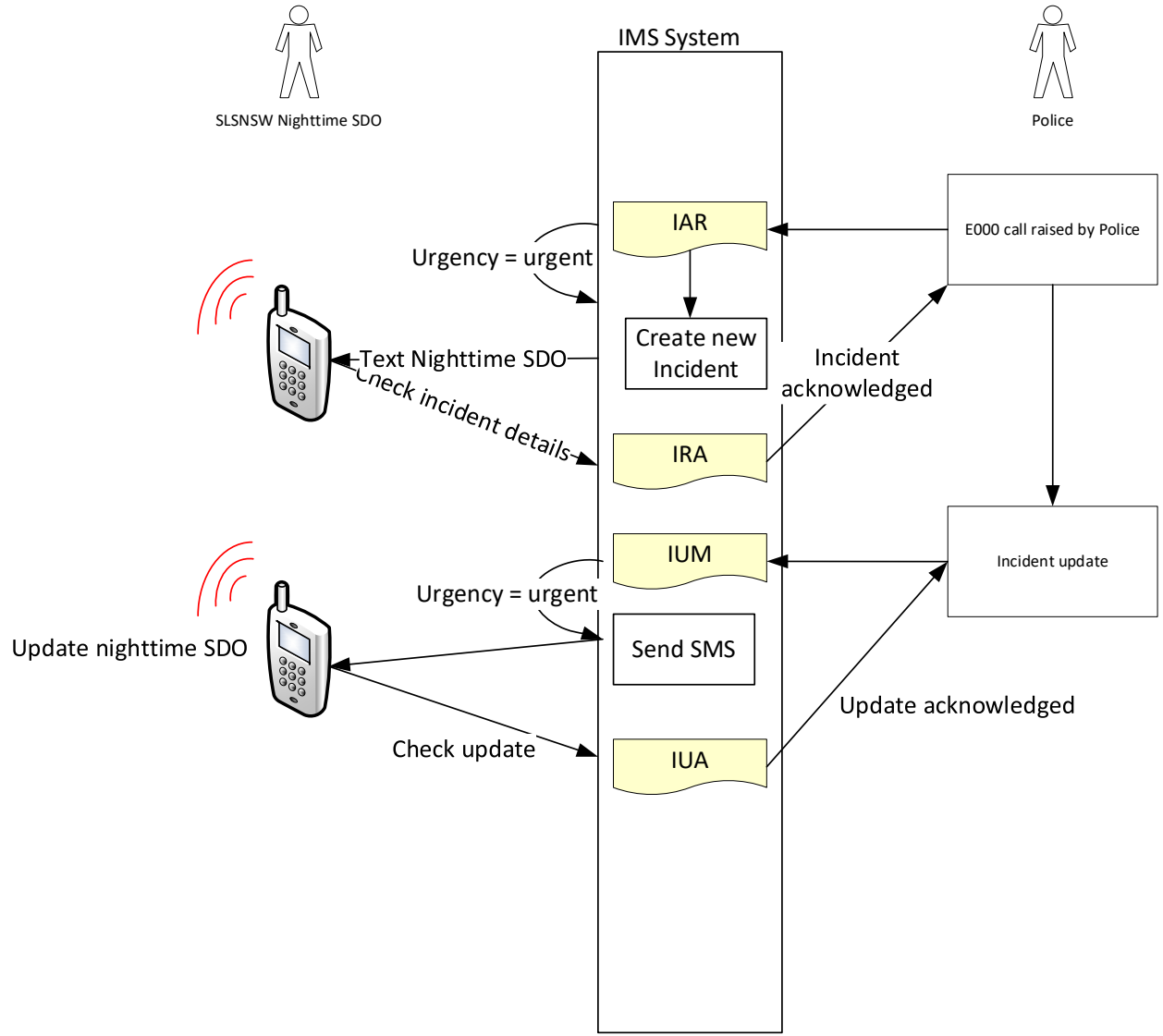

Message handling - components

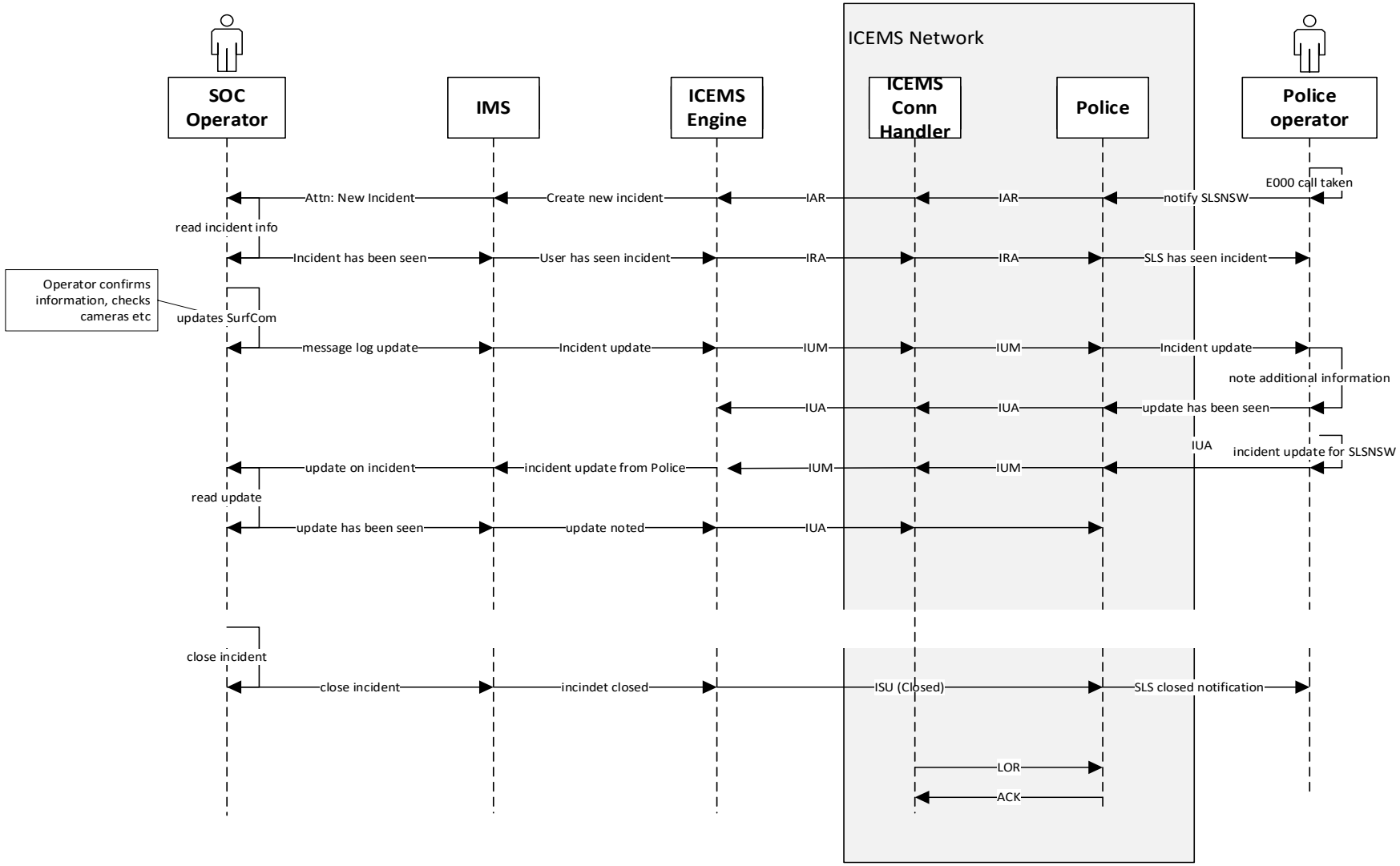

Data Model

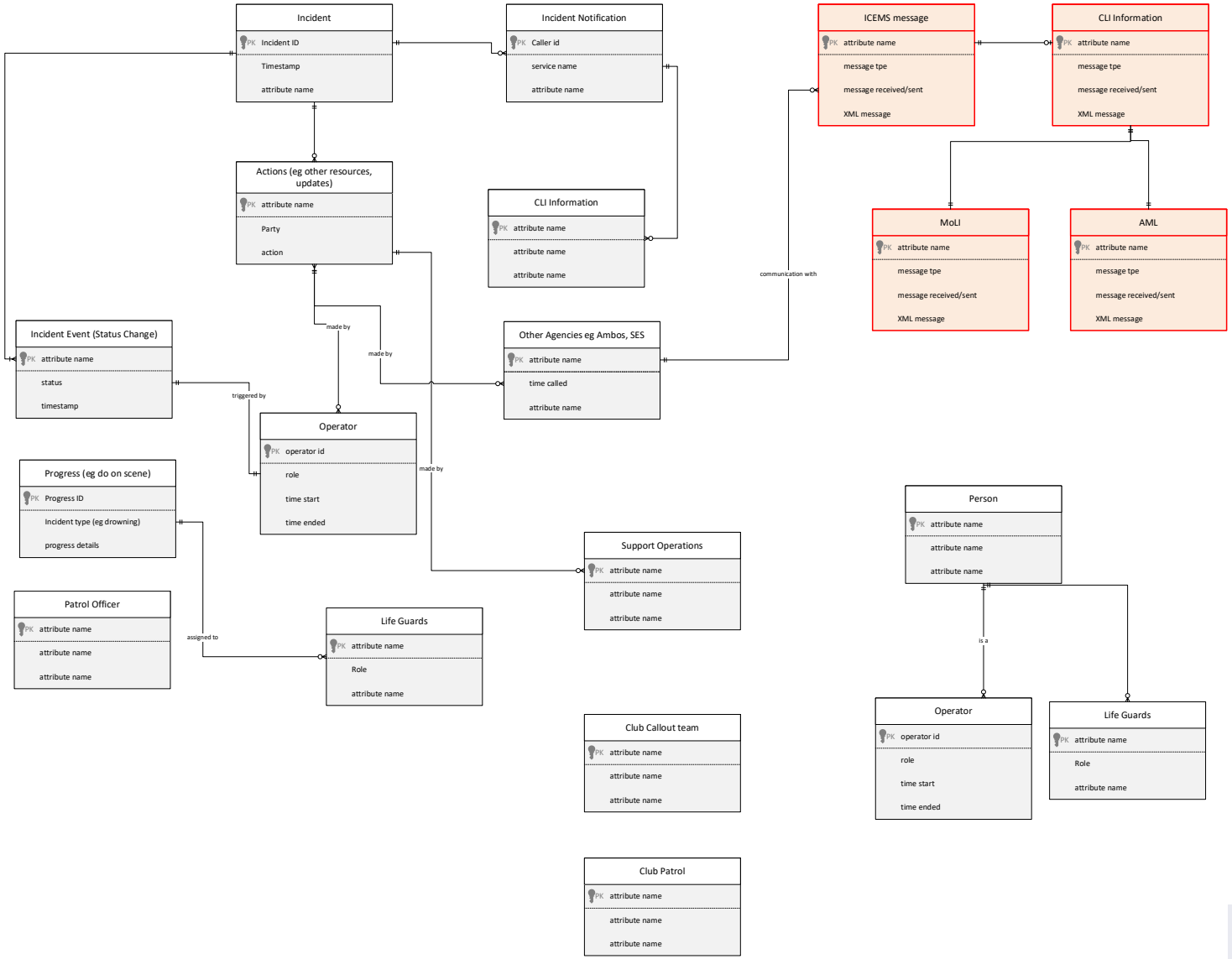
Incident
PK Incident ID
Timestamp
attribute name
Incident Notification
PK Caller id
service name
attribute name
ICEMS message
PK attribute name
message tpe
message received/sent
XML message
CLI Information
PK attribute name
message tpe
message received/sent
XML message
Actions (eg other resources, updates)
PK attribute name
Party
action
CLI Information
PK attribute name
attribute name
attribute name
communication with
MoLI
PK attribute name
message tpe
message received/sent
XML message
AML
PK attribute name
message tpe
message received/sent
XML message
Incident Event (Status Change)
PK attribute name
status
timestamp
made by
made by
Other Agencies eg Ambos, SES
PK attribute name
time called
attribute name
triggered by
Operator
PK operator id
role
time start
time ended
made by
Progress (eg do on scene)
PK Progress ID
Incident type (eg drowning)
progress details
Support Operations
PK attribute name
attribute name
attribute name
Person
PK attribute name
attribute name
attribute name
Patrol Officer
PK attribute name
attribute name
attribute name
assigned to
Life Guards
PK attribute name
Role
attribute name
is a
Operator
PK operator id
role
time start
time ended
Life Guards
PK attribute name
Role
attribute name
Club Callout team
PK attribute name
attribute name
attribute name
Club Patrol
PK attribute name
attribute name
attribute name

Time Out Configuration

Timer	Range	Example/Notes	SLSNSW Config
ACK timeout	10sec to 60sec	**Awaiting the associated ACK in response to a message being sent. This applies to all messages associated with the agency**	**This is automatic and can be handled by the ICEMS Connection Handler component**
Op Accept timeout	10 sec to 24hr	**Awaiting the associated IRA Operational Acceptance message following the sending of an IAR**	**This should be set so that incidents do not timeout while the SOC is unmanned at night. Maybe make this 15 hours.**
Urgent Op Accept timeout	10sec to 60min	**Awaiting the associated IRA Operational Acceptance message following the sending of an Urgent IAR**	**This should probably be set at about 10 minutes.**
IUM timeout	10sec to 60min	**Awaiting the associated IUA message following an IUM being sent**	**This should be set so that updates do not timeout while the SOC is unmanned at night. Maybe make this 15 hours.**
Urgent IUM timeout	10sec to 60min	**Awaiting the associated IUA message following the sending of an urgent IUM**	**This should probably be set at about 10 minutes.**
RSQ timeout	**10sec to 60min**	**Awaiting the associated RSU message following the sending of an RSQ**	**There is no urgency indicator on this message so it will need to be set to align with the non-urgent IARs and IUMs.**