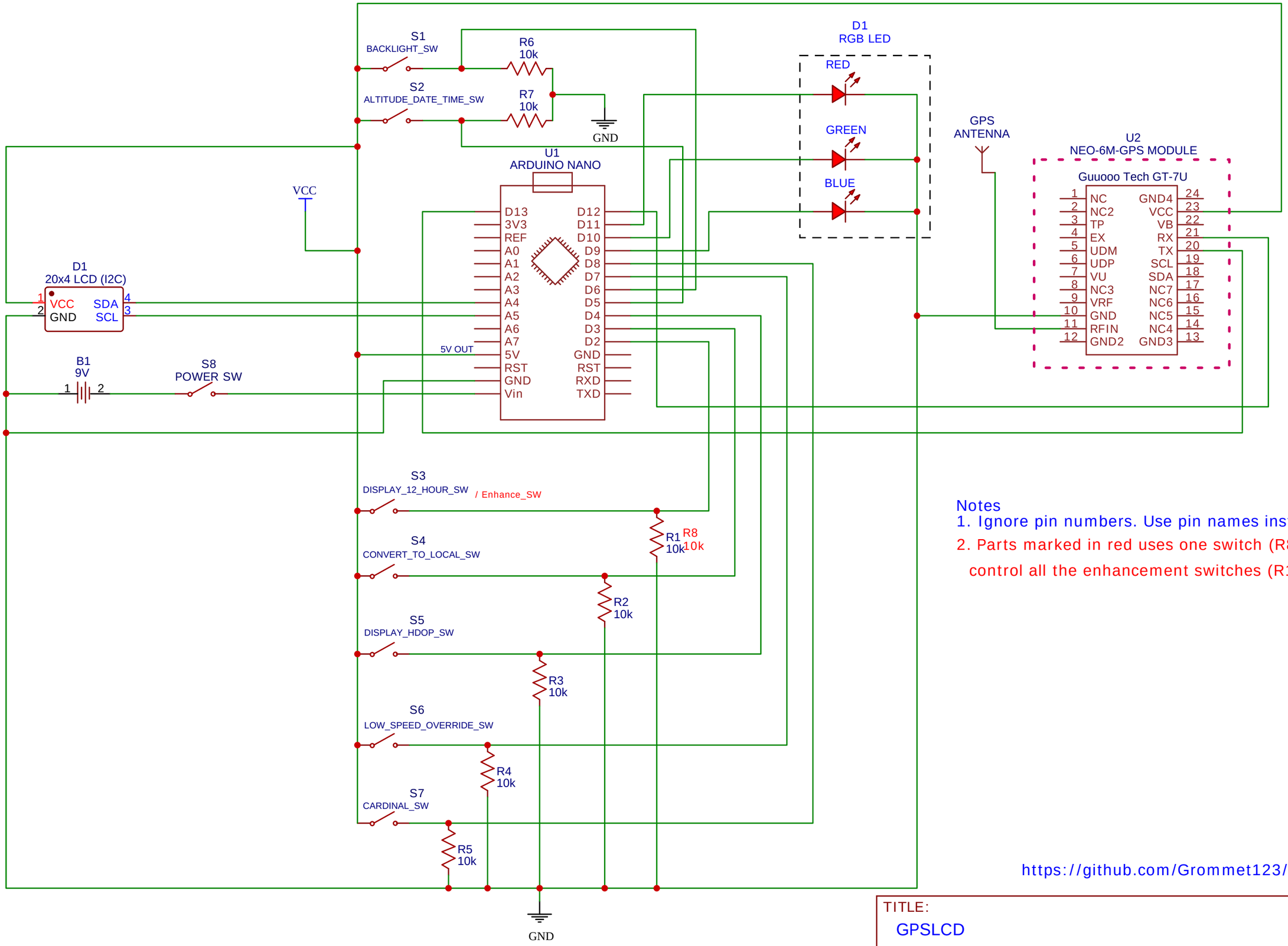

Notes
1. Ignore pin numbers. Use pin names instead
2. Parts marked in red uses one switch (R8) to control all the enhancement switches (R1-R5)

https://github.com/Grommet123/GPSLCD

TITLE: GPSLCD	REV: 4.1
Date: 2016-11-27	Sheet: 1/1
EasyEDA V3.11.3	Drawn By: GK Grotsky