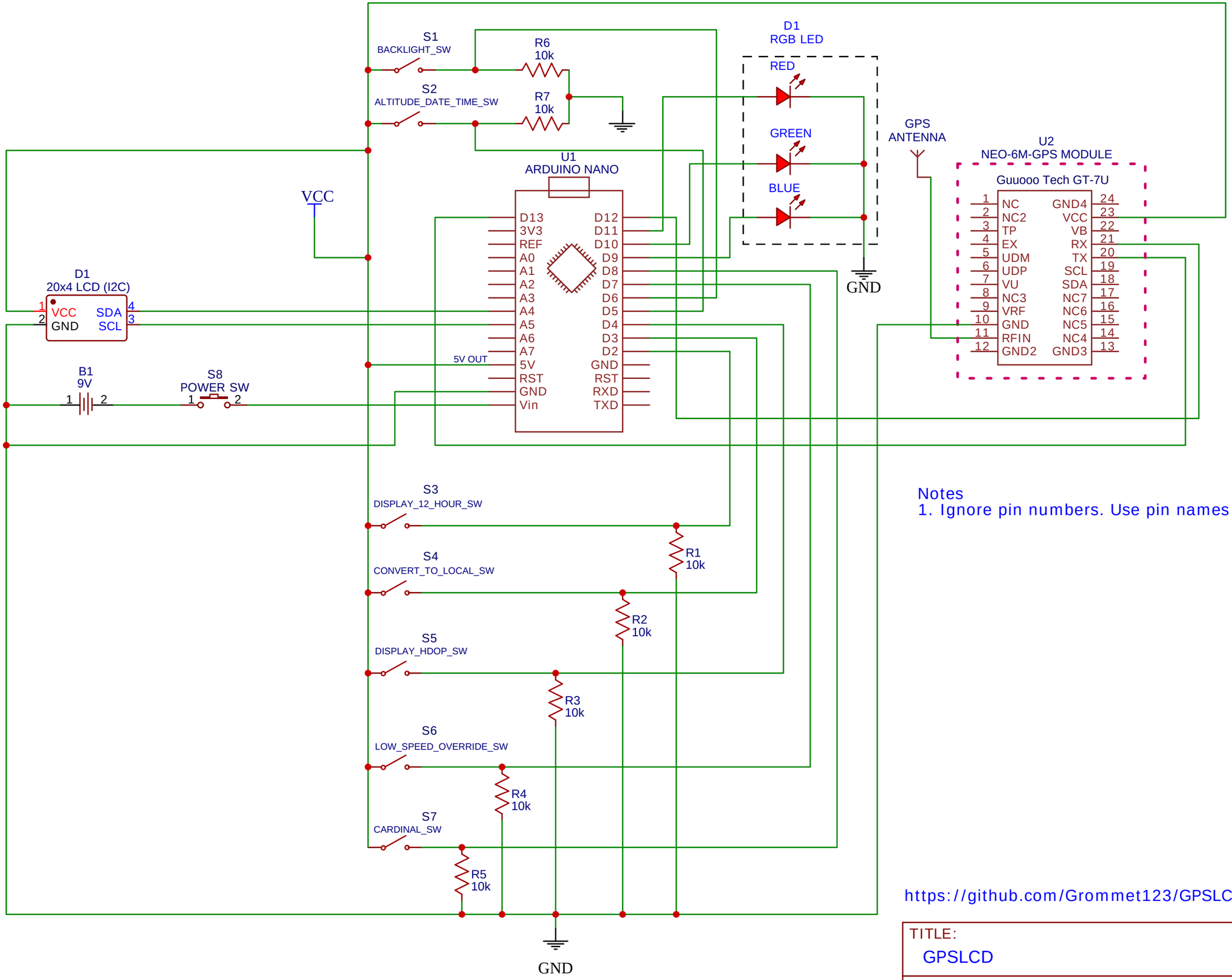

Notes
1. Ignore pin numbers. Use pin names instead

https://github.com/Grommet123/GPSLCD

TITLE: GPSLCD	REV: 3.11
Date: 2016-11-27	Sheet: 1/1
EasyEDA V3.11.3	Drawn By: GK Grotsky