| REVISIONS | | | | |
|---|---|---|---|---|
| ZONE | REV. | DESCRIPTION | DATE | APPROVED |
| B1, B2 | A | Edited Sheet Layout | 5/18/2023 | JIC |

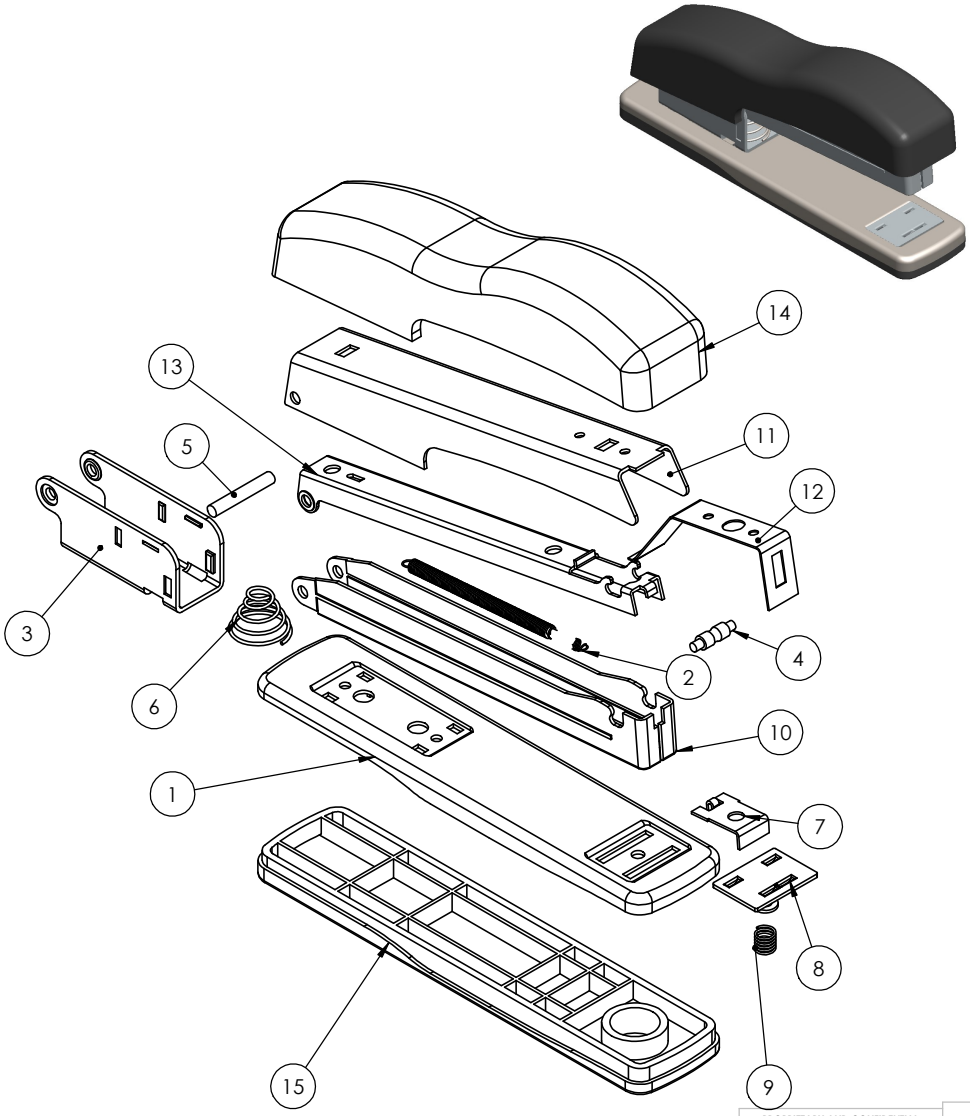


| ITEM NO. | PART NUMBER | DESCRIPTION | MATERIAL | QTY. |
|---|---|---|---|---|
| 1 | REP 1 | BASE | 1023 Carbon Steel Sheet (SS) | 1 |
| 2 | REP 2 | Steel Extension Spring | Spring-Tempered Steel | 1 |
| 3 | REP 3 | HINGE LOCK | Chrome Stainless Steel | 1 |
| 4 | REP 4 | SPRING CHANNEL | Chrome Stainless Steel | 1 |
| 5 | REP 5 | HINGE DOWEL | Chrome Stainless Steel | 1 |
| 6 | REP 6 | COMPRESSION SPRING | 1023 Carbon Steel Sheet (SS) | 1 |
| 7 | REP 7 | STAPLE PUSHER | Chrome Stainless Steel | 1 |
| 8 | REP 8 | STAPLE BENDER | Chrome Stainless Steel | 1 |
| 9 | REP 9 | SMALL COMPRESSION SPRING | Chrome Stainless Steel | 1 |
| 10 | REP 10 | STAPLER RAIL | Chrome Stainless Steel | 1 |
| 11 | REP 11 | STAPLER TOP | Chrome Stainless Steel | 1 |
| 12 | REP 12 | TAB SPRING | Plain Carbon Steel | 1 |
| 13 | REP 13 | RAIL TOP | Chrome Stainless Steel | 1 |
| 14 | REP 14 | COSMETIC COVER | ABS | 1 |
| 15 | REP 15 | COSMETIC BASE | Silicon Rubber | 1 |

**PROPRIETARY AND CONFIDENTIAL**

THE INFORMATION CONTAINED IN THIS DRAWING IS THE SOLE PROPERTY OF CHAFFEY ENGINEERING. ANY REPRODUCTION IN PART OR AS A WHOLE WITHOUT THE WRITTEN PERMISSION OF CHAFFEY ENGINEERING IS PROHIBITED.

| NEXT ASSY | USED ON |
|---|---|
| APPLICATION | |

UNLESS OTHERWISE SPECIFIED:

DIMENSIONS ARE IN INCHES
TOLERANCES:
FRACTIONAL ±1/16
ANGULAR: MACH ± .5 BEND ±1
TWO PLACE DECIMAL ±.03
THREE PLACE DECIMAL ±.01

INTERPRET GEOMETRIC TOLERANCING PER: ANSI Y 14.5

MATERIAL: SEE BOM

FINISH: None

DO NOT SCALE DRAWING

| | NAME | DATE |
|---|---|---|
| DRAWN | JIC | 4/30/23 |
| CHECKED | | |
| ENG APPR. | | |
| MFG APPR. | | |
| Q.A. | | |

COMMENTS:

CHAFFEY ENGINEERING

TITLE: STAPLER

| SIZE | DWG. NO. | REV |
|---|---|---|
| B | REP | A |

SCALE: 1:1 | WEIGHT: 0.822 | SHEET 1 OF 1

**SOLIDWORKS Educational Product. For Instructional Use Only.**