REVISIONS				
ZONE	REV.	DESCRIPTION	DATE	APPROVED

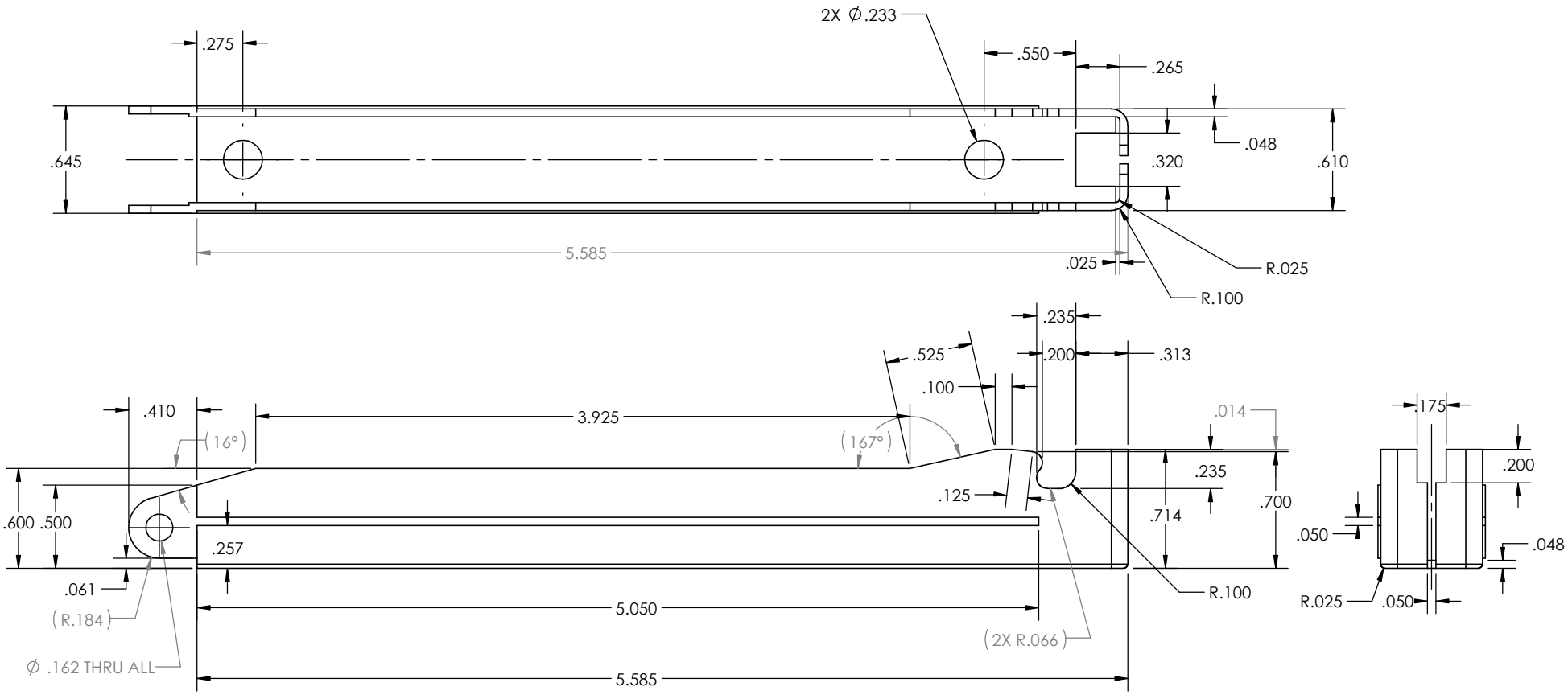

PROPRIETARY AND CONFIDENTIAL

THE INFORMATION CONTAINED IN THIS DRAWING IS THE SOLE PROPERTY OF <INSERT COMPANY NAME HERE>. ANY REPRODUCTION IN PART OR AS A WHOLE WITHOUT THE WRITTEN PERMISSION OF <INSERT COMPANY NAME HERE> IS PROHIBITED.

NEXT ASSY	USED ON
APPLICATION	

UNLESS OTHERWISE SPECIFIED:

DIMENSIONS ARE IN INCHES
TOLERANCES:
FRACTIONAL ±1/16
ANGULAR: MACH ± .5 BEND ±1
TWO PLACE DECIMAL ±.03
THREE PLACE DECIMAL ±.01

INTERPRET GEOMETRIC TOLERANCING PER: ANSI Y 14.5

MATERIAL
Chrome Stainless Steel

FINISH
None

DO NOT SCALE DRAWING

	NAME	DATE
DRAWN	JIC	5/18/23
CHECKED		
ENG APPR.		
MFG APPR.		
Q.A.		

COMMENTS:

CHAFFEY ENGINEERING

TITLE:
STAPLER RAIL

SIZE	DWG. NO.	REV
B	REP 10	-

SCALE: 5:3 | WEIGHT: 0.135 | SHEET 1 OF 1

SOLIDWORKS Educational Product. For Instructional Use Only.