Lab 5: Algebraic Operations

Examples and Deliverables

MAE 405, 2025 Spring

TA: Xinlei Zhang

To be prepared with OPAMP

- OPAMP (Operational Amplifier)

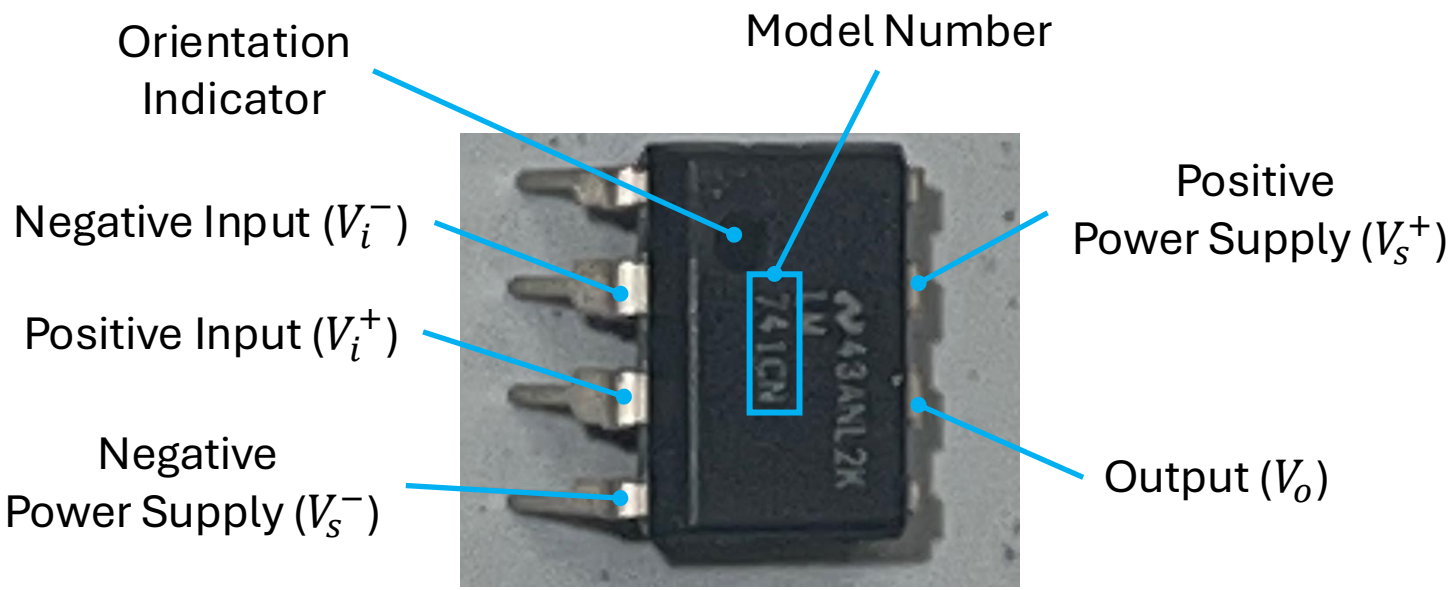

OPAMP 741CN

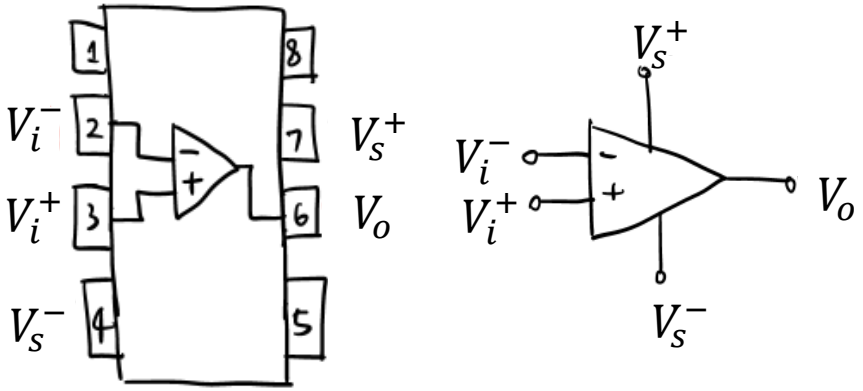

OPAMP Diagram

Comments:

- Put the Circle (orientation indicator) at the upper-left corner to align the OPAMP with the diagram
- Identify the Model Number – 741CN

Example 1 (Deliverable 1 – Task A in Experiment 4)

- Buffer Circuit – buffering +15V from the power source

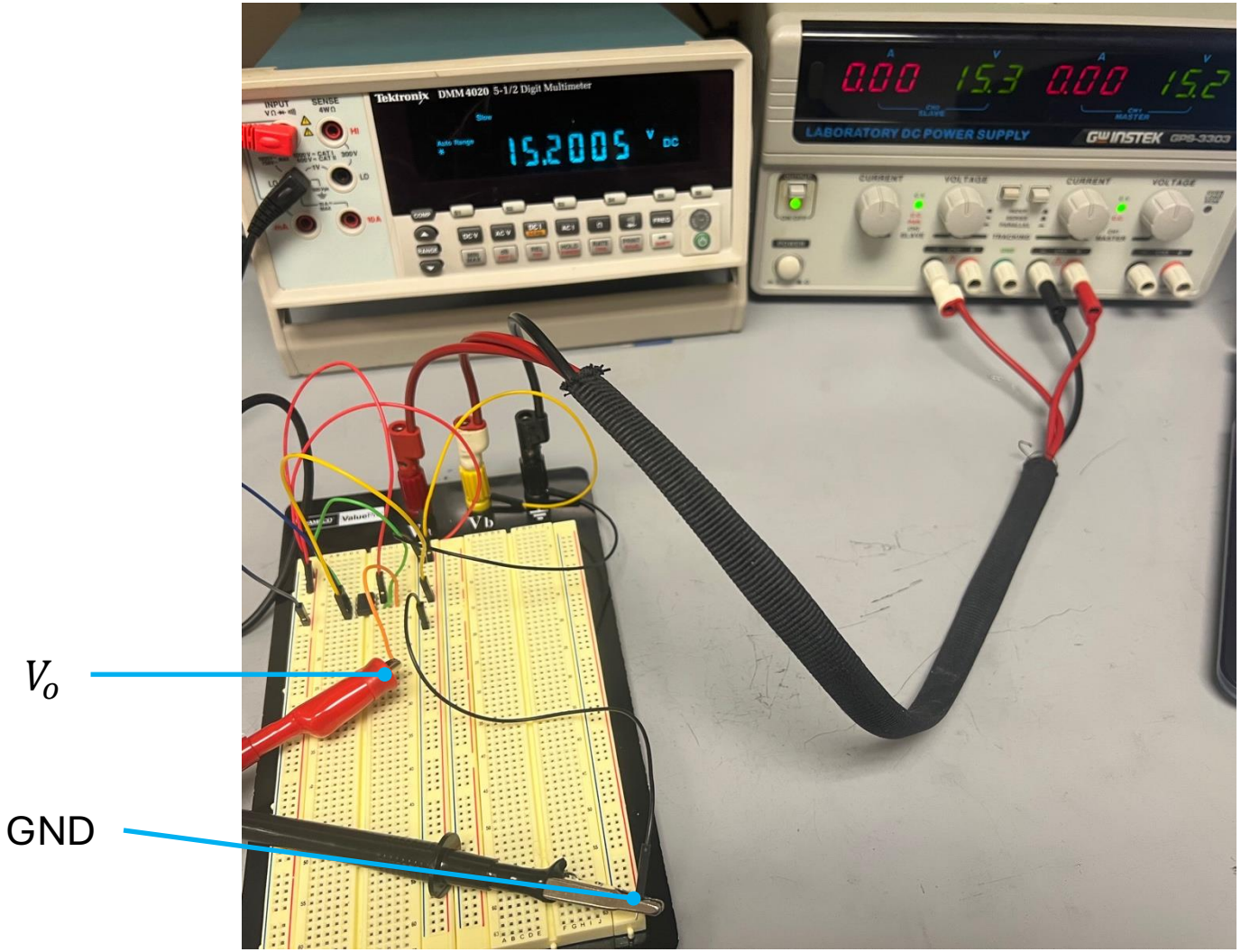

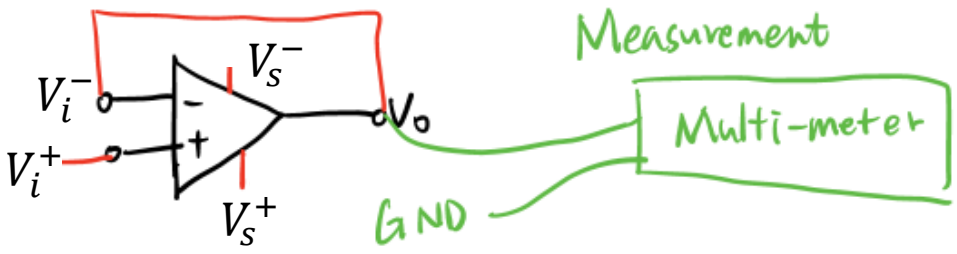

Connection Diagram

Expect Result: multimeter red input ($V_o = +15$ V) – multimeter black input (0 V) = $+15$ V

Example 1 – Cont'd

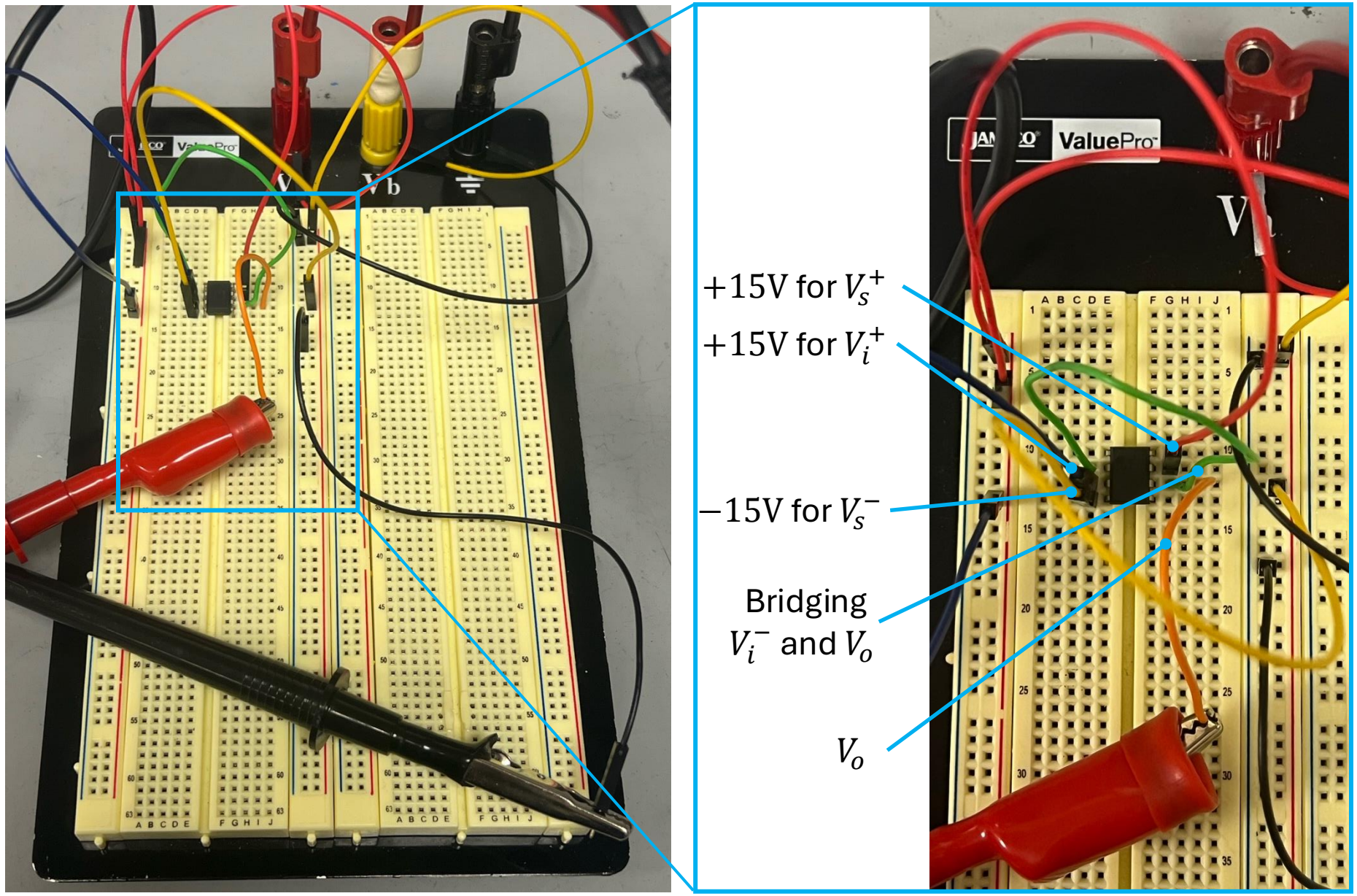

Wires connected to OPAMP

- Red: V_s^+
- Green:Bridging V_i^- and V_o
- Orange: To measure V_o
- Blue: V_i^+
- Yellow: V_s^-

Example 2 (Deliverable 2 – Task B in Experiment 4)

- Gain circuit
- To be prepared: get one OPAMP and two resistors (R_F and R_1)
  - To get $V_0 = -5\text{V}$ from the output of last circuit ($V_o = +15\text{V}$ from the buffering circuit)

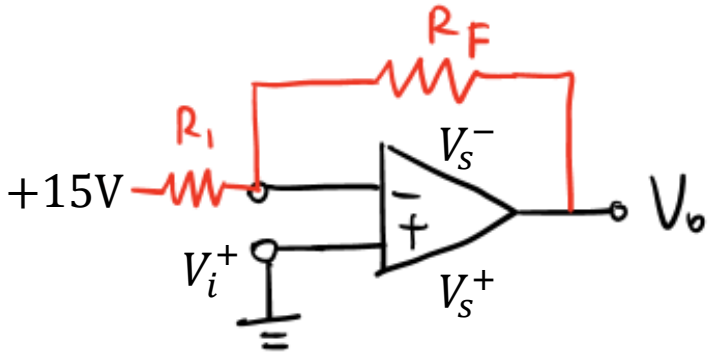

$$V_o = -\frac{R_F}{R_1} \times 15\text{V}$$

  - How to select R_F and R_1?

    As long as $\frac{R_F}{R_1} \approx \frac{1}{3}$, e.g., $R_F = 100\ \text{K}\Omega$, $R_1 = 300\ \text{K}\Omega$
  - How to tell the resistance of a resistor?

    Multimeter Ohm mode; Color rings

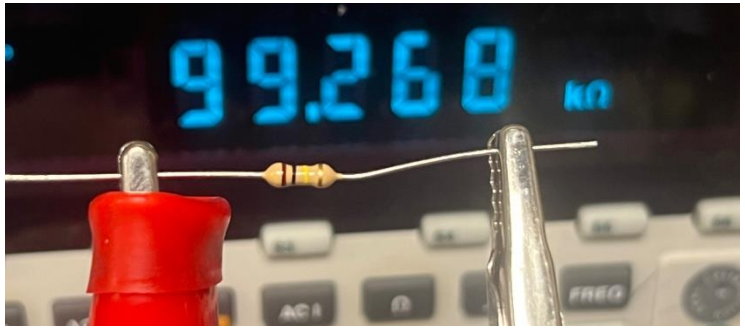

100 KΩ (brown, black, yellow)

300 KΩ (orange, black, yellow)

Example 2 – Cont'd

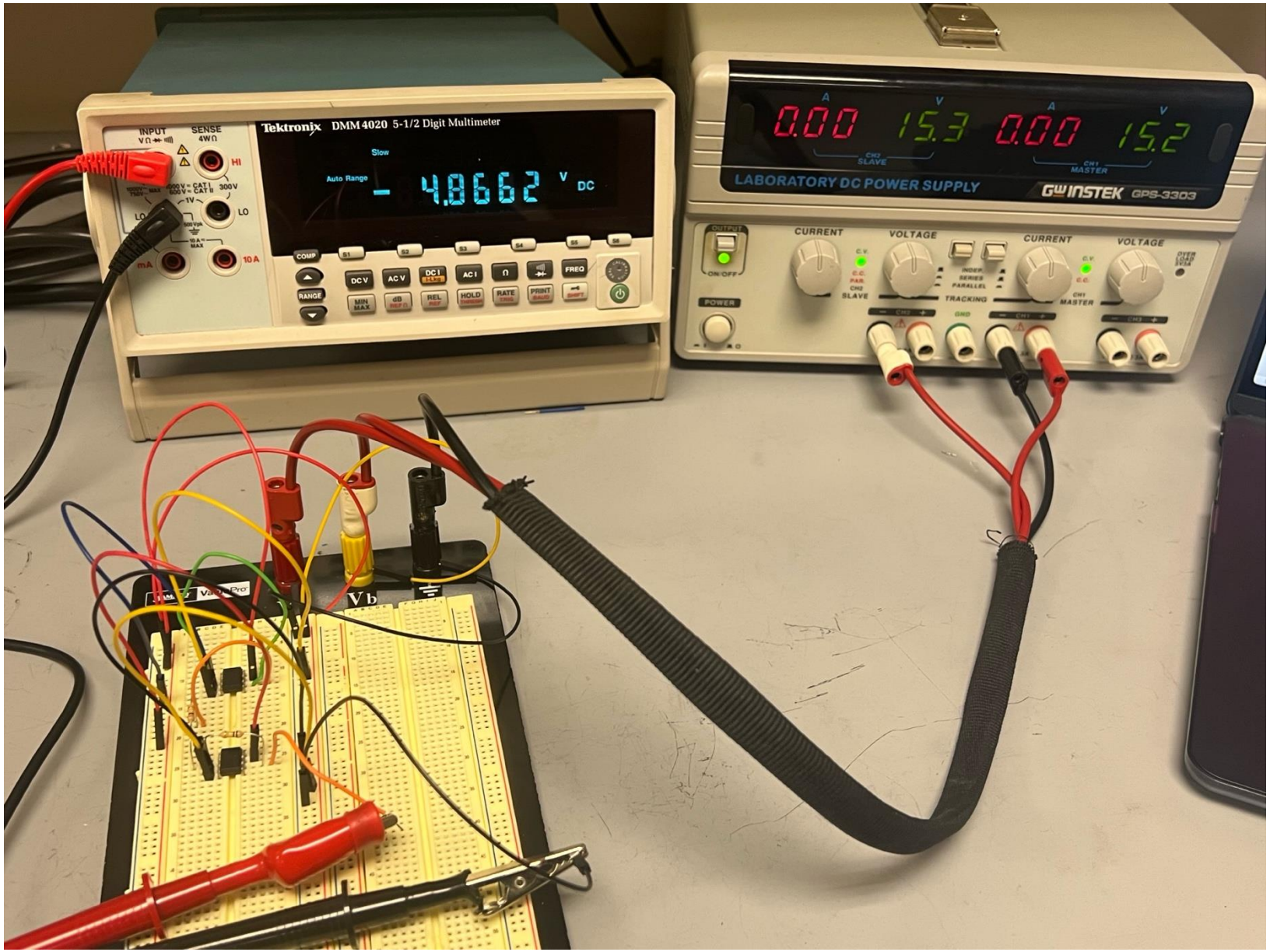

Expect Result: multimeter red input ($V_o = -5\text{V}$) – multimeter black input (0V) = -5V

Example 2 – Cont'd

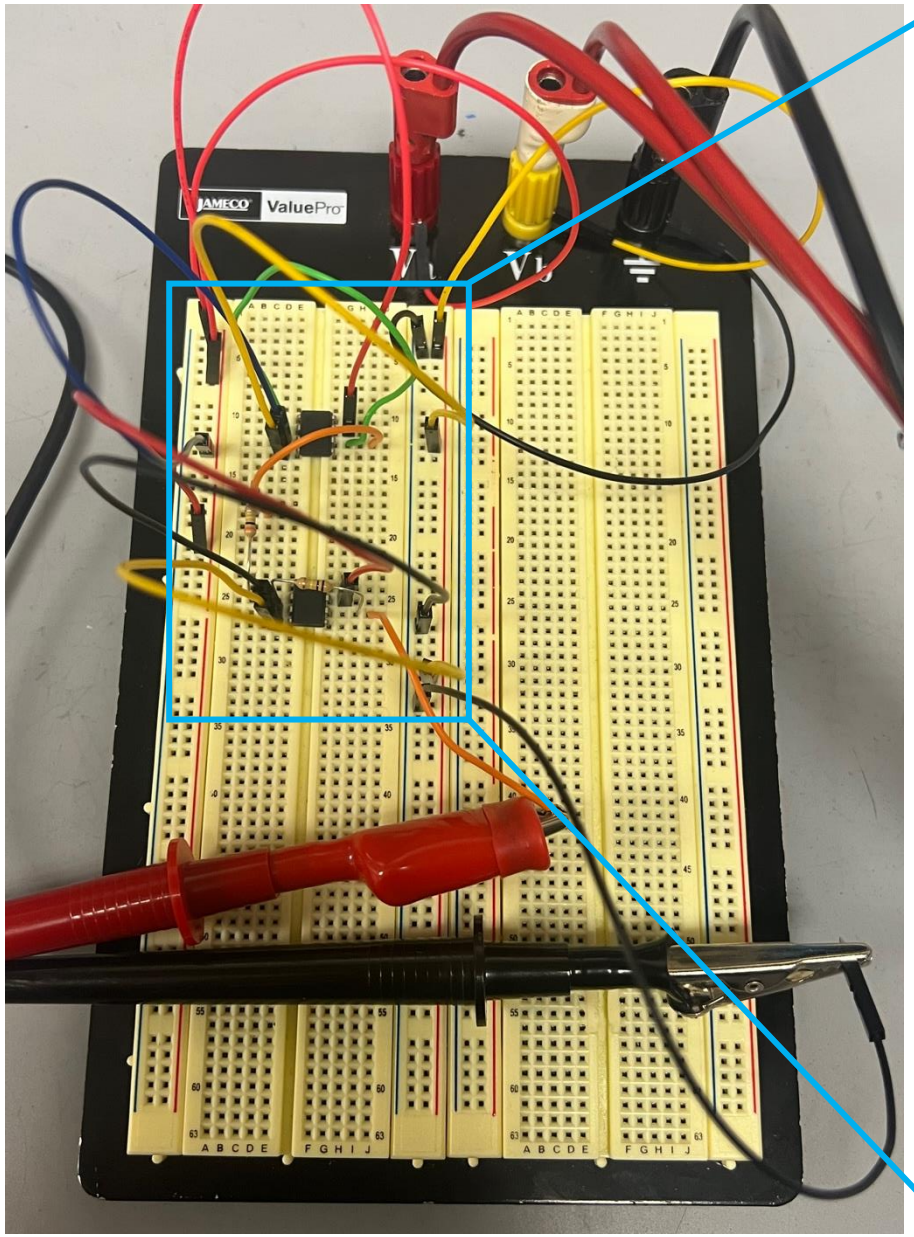

$V_o = +15$ V

$R_1 = 300$ kΩ

$R_F = 100$ kΩ

0 V for V_i^+

-15 V for V_s^-

V_o

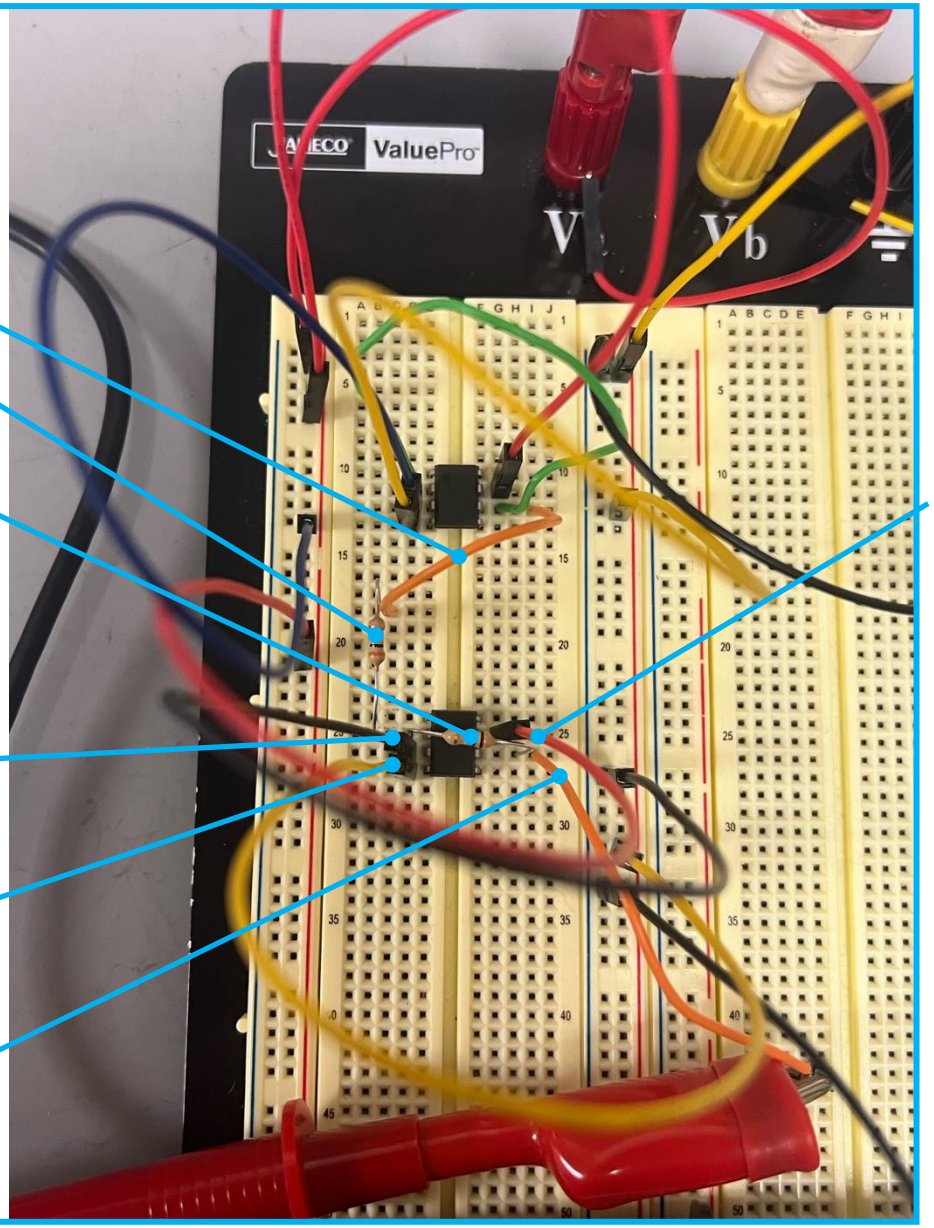

$+15$ V for V_s^+

Deliverable 3 – Task C in Experiment 4

- Summation of the outputs from circuit A and B

Addition

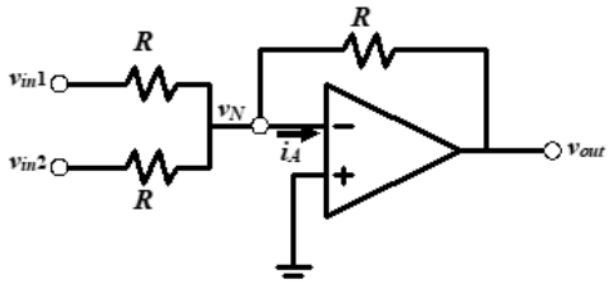

$$v_{out} = -\ (v_{in1} + v_{in2})$$

Deliverables Summary:

- Tasks A, B, C, D, E in Experiment 4
- Task F is not required

Deliverable 4 – Task D in Experiment 4

- Invert the output from circuit B
- With the gain circuit, but with gain $\frac{R_F}{R_1} = 1$

Deliverable 5 – Task E in Experiment 4

- Subtraction between the outputs from circuit A and D (A-D)

Subtraction

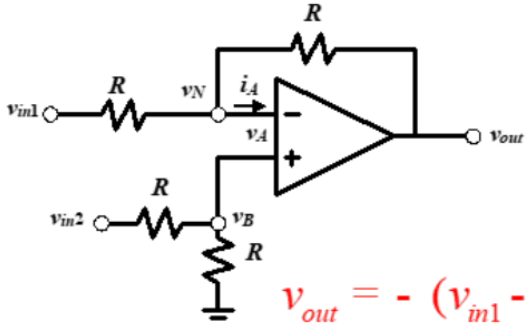

$$v_{out} = -\ (v_{in1} - v_{in2})$$