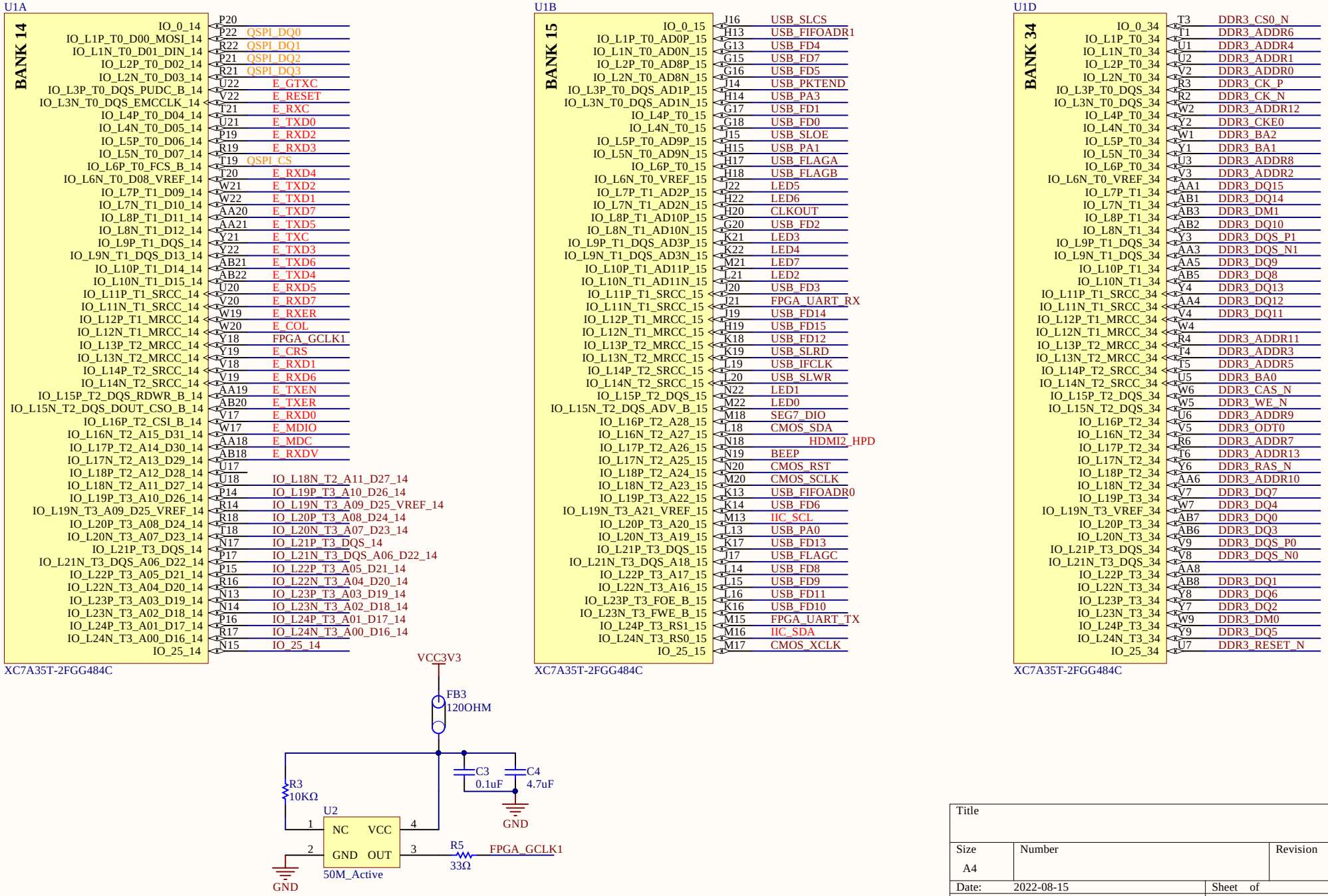
U1A
BANK 14
IO_0_14 P20
IO_L1P_T0_D00_MOSI_14 P22 QSPI_DQ0
IO_L1N_T0_D01_DIN_14 R22 QSPI_DQ1
IO_L2P_T0_D02_14 P21 QSPI_DQ2
IO_L2N_T0_D03_14 R21 QSPI_DQ3
IO_L3P_T0_DQS_PUDC_B_14 U22 E_GTXC
IO_L3N_T0_DQS_EMCCLK_14 V22 E_RESET
IO_L4P_T0_D04_14 T21 E_RXC
IO_L4N_T0_D05_14 U21 E_TXD0
IO_L5P_T0_D06_14 P19 E_RXD2
IO_L5N_T0_D07_14 R19 E_RXD3
IO_L6P_T0_FCS_B_14 T19 QSPI_CS
IO_L6N_T0_D08_VREF_14 T20 E_RXD4
IO_L7P_T1_D09_14 W21 E_TXD2
IO_L7N_T1_D10_14 W22 E_TXD1
IO_L8P_T1_D11_14 AA20 E_TXD7
IO_L8N_T1_D12_14 AA21 E_TXD5
IO_L9P_T1_DQS_14 Y21 E_TXC
IO_L9N_T1_DQS_D13_14 Y22 E_TXD3
IO_L10P_T1_D14_14 AB21 E_TXD6
IO_L10N_T1_D15_14 AB22 E_TXD4
IO_L11P_T1_SRCC_14 U20 E_RXD5
IO_L11N_T1_SRCC_14 V20 E_RXD7
IO_L12P_T1_MRCC_14 W19 E_RXER
IO_L12N_T1_MRCC_14 W20 E_COL
IO_L13P_T2_MRCC_14 Y18 FPGA_GCLK1
IO_L13N_T2_MRCC_14 Y19 E_CRS
IO_L14P_T2_SRCC_14 V18 E_RXD1
IO_L14N_T2_SRCC_14 V19 E_RXD6
IO_L15P_T2_DQS_RDWR_B_14 AA19 E_TXEN
IO_L15N_T2_DQS_DOUT_CSO_B_14 AB20 E_TXER
IO_L16P_T2_CSI_B_14 V17 E_RXD0
IO_L16N_T2_A15_D31_14 W17 E_MDIO
IO_L17P_T2_A14_D30_14 AA18 E_MDC
IO_L17N_T2_A13_D29_14 AB18 E_RXDV
IO_L18P_T2_A12_D28_14 U17
IO_L18N_T2_A11_D27_14 U18 IO_L18N_T2_A11_D27_14
IO_L19P_T3_A10_D26_14 P14 IO_L19P_T3_A10_D26_14
IO_L19N_T3_A09_D25_VREF_14 R14 IO_L19N_T3_A09_D25_VREF_14
IO_L20P_T3_A08_D24_14 R18 IO_L20P_T3_A08_D24_14
IO_L20N_T3_A07_D23_14 T18 IO_L20N_T3_A07_D23_14
IO_L21P_T3_DQS_14 N17 IO_L21P_T3_DQS_14
IO_L21N_T3_DQS_A06_D22_14 P17 IO_L21N_T3_DQS_A06_D22_14
IO_L22P_T3_A05_D21_14 P15 IO_L22P_T3_A05_D21_14
IO_L22N_T3_A04_D20_14 R16 IO_L22N_T3_A04_D20_14
IO_L23P_T3_A03_D19_14 N13 IO_L23P_T3_A03_D19_14
IO_L23N_T3_A02_D18_14 N14 IO_L23N_T3_A02_D18_14
IO_L24P_T3_A01_D17_14 P16 IO_L24P_T3_A01_D17_14
IO_L24N_T3_A00_D16_14 R17 IO_L24N_T3_A00_D16_14
IO_25_14 N15 IO_25_14
XC7A35T-2FGG484C
U1B
BANK 15
IO_0_15 J16 USB_SLCS
IO_L1P_T0_AD0P_15 H13 USB_FIFOADR1
IO_L1N_T0_AD0N_15 G13 USB_FD4
IO_L2P_T0_AD8P_15 G15 USB_FD7
IO_L2N_T0_AD8N_15 G16 USB_FD5
IO_L3P_T0_DQS_AD1P_15 J14 USB_PKTEND
IO_L3N_T0_DQS_AD1N_15 H14 USB_PA3
IO_L4P_T0_15 G17 USB_FD1
IO_L4N_T0_15 G18 USB_FD0
IO_L5P_T0_AD9P_15 J15 USB_SLOE
IO_L5N_T0_AD9N_15 H15 USB_PA1
IO_L6P_T0_15 H17 USB_FLAGA
IO_L6N_T0_VREF_15 H18 USB_FLAGB
IO_L7P_T1_AD2P_15 J22 LED5
IO_L7N_T1_AD2N_15 H22 LED6
IO_L8P_T1_AD10P_15 H20 CLKOUT
IO_L8N_T1_AD10N_15 G20 USB_FD2
IO_L9P_T1_DQS_AD3P_15 K21 LED3
IO_L9N_T1_DQS_AD3N_15 K22 LED4
IO_L10P_T1_AD11P_15 M21 LED7
IO_L10N_T1_AD11N_15 L21 LED2
IO_L11P_T1_SRCC_15 J20 USB_FD3
IO_L11N_T1_SRCC_15 J21 FPGA_UART_RX
IO_L12P_T1_MRCC_15 J19 USB_FD14
IO_L12N_T1_MRCC_15 H19 USB_FD15
IO_L13P_T2_MRCC_15 K18 USB_FD12
IO_L13N_T2_MRCC_15 K19 USB_SLRD
IO_L14P_T2_SRCC_15 L19 USB_IFCLK
IO_L14N_T2_SRCC_15 L20 USB_SLWR
IO_L15P_T2_DQS_15 N22 LED1
IO_L15N_T2_DQS_ADV_B_15 M22 LED0
IO_L16P_T2_A28_15 M18 SEG7_DIO
IO_L16N_T2_A27_15 L18 CMOS_SDA
IO_L17P_T2_A26_15 N18 HDMI2_HPD
IO_L17N_T2_A25_15 N19 BEEP
IO_L18P_T2_A24_15 N20 CMOS_RST
IO_L18N_T2_A23_15 M20 CMOS_SCLK
IO_L19P_T3_A22_15 K13 USB_FIFOADR0
IO_L19N_T3_A21_VREF_15 K14 USB_FD6
IO_L20P_T3_A20_15 M13 IIC_SCL
IO_L20N_T3_A19_15 L13 USB_PA0
IO_L21P_T3_DQS_15 K17 USB_FD13
IO_L21N_T3_DQS_A18_15 J17 USB_FLAGC
IO_L22P_T3_A17_15 L14 USB_FD8
IO_L22N_T3_A16_15 L15 USB_FD9
IO_L23P_T3_FOE_B_15 L16 USB_FD11
IO_L23N_T3_FWE_B_15 K16 USB_FD10
IO_L24P_T3_RS1_15 M15 FPGA_UART_TX
IO_L24N_T3_RS0_15 M16 IIC_SDA
IO_25_15 M17 CMOS_XCLK
XC7A35T-2FGG484C
U1D
BANK 34
IO_0_34 T3 DDR3_CS0_N
IO_L1P_T0_34 T1 DDR3_ADDR6
IO_L1N_T0_34 U1 DDR3_ADDR4
IO_L2P_T0_34 U2 DDR3_ADDR1
IO_L2N_T0_34 V2 DDR3_ADDR0
IO_L3P_T0_DQS_34 R3 DDR3_CK_P
IO_L3N_T0_DQS_34 R2 DDR3_CK_N
IO_L4P_T0_34 W2 DDR3_ADDR12
IO_L4N_T0_34 Y2 DDR3_CKE0
IO_L5P_T0_34 W1 DDR3_BA2
IO_L5N_T0_34 Y1 DDR3_BA1
IO_L6P_T0_34 U3 DDR3_ADDR8
IO_L6N_T0_VREF_34 V3 DDR3_ADDR2
IO_L7P_T1_34 AA1 DDR3_DQ15
IO_L7N_T1_34 AB1 DDR3_DQ14
IO_L8P_T1_34 AB3 DDR3_DM1
IO_L8N_T1_34 AB2 DDR3_DQ10
IO_L9P_T1_DQS_34 Y3 DDR3_DQS_P1
IO_L9N_T1_DQS_34 AA3 DDR3_DQS_N1
IO_L10P_T1_34 AA5 DDR3_DQ9
IO_L10N_T1_34 AB5 DDR3_DQ8
IO_L11P_T1_SRCC_34 Y4 DDR3_DQ13
IO_L11N_T1_SRCC_34 AA4 DDR3_DQ12
IO_L12P_T1_MRCC_34 V4 DDR3_DQ11
IO_L12N_T1_MRCC_34 W4
IO_L13P_T2_MRCC_34 R4 DDR3_ADDR11
IO_L13N_T2_MRCC_34 T4 DDR3_ADDR3
IO_L14P_T2_SRCC_34 T5 DDR3_ADDR5
IO_L14N_T2_SRCC_34 U5 DDR3_BA0
IO_L15P_T2_DQS_34 W6 DDR3_CAS_N
IO_L15N_T2_DQS_34 W5 DDR3_WE_N
IO_L16P_T2_34 U6 DDR3_ADDR9
IO_L16N_T2_34 V5 DDR3_ODT0
IO_L17P_T2_34 R6 DDR3_ADDR7
IO_L17N_T2_34 T6 DDR3_ADDR13
IO_L18P_T2_34 Y6 DDR3_RAS_N
IO_L18N_T2_34 AA6 DDR3_ADDR10
IO_L19P_T3_34 V7 DDR3_DQ7
IO_L19N_T3_VREF_34 W7 DDR3_DQ4
IO_L20P_T3_34 AB7 DDR3_DQ0
IO_L20N_T3_34 AB6 DDR3_DQ3
IO_L21P_T3_DQS_34 V9 DDR3_DQS_P0
IO_L21N_T3_DQS_34 V8 DDR3_DQS_N0
IO_L22P_T3_34 AA8
IO_L22N_T3_34 AB8 DDR3_DQ1
IO_L23P_T3_34 Y8 DDR3_DQ6
IO_L23N_T3_34 Y7 DDR3_DQ2
IO_L24P_T3_34 W9 DDR3_DM0
IO_L24N_T3_34 Y9 DDR3_DQ5
IO_25_34 U7 DDR3_RESET_N
XC7A35T-2FGG484C
VCC3V3
FB3
120OHM
C3
0.1uF
C4
4.7uF
GND
R3
10KΩ
U2
NC VCC
GND OUT
50M_Active
R5
33Ω
FPGA_GCLK1
GND
Title
Size
A4
Number
Revision
Date: 2022-08-15
Sheet of
File: C:\Users\..\01_7A35T_FPGA_IO.SchDoc
Drawn By:

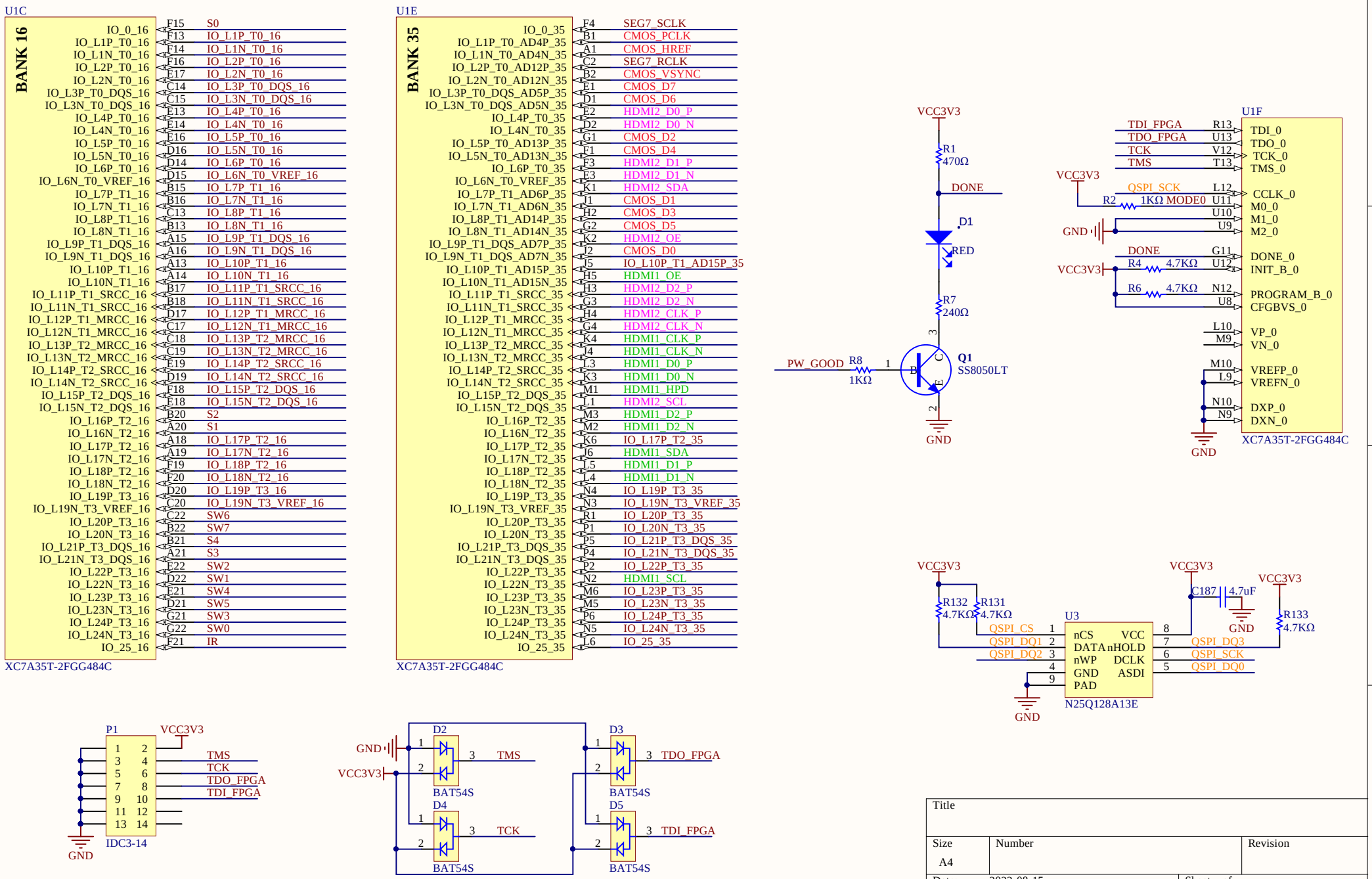
U1C
BANK 16
IO_0_16 F15 S0
IO_L1P_T0_16 F13 IO_L1P_T0_16
IO_L1N_T0_16 F14 IO_L1N_T0_16
IO_L2P_T0_16 E16 IO_L2P_T0_16
IO_L2N_T0_16 E17 IO_L2N_T0_16
IO_L3P_T0_DQS_16 C14 IO_L3P_T0_DQS_16
IO_L3N_T0_DQS_16 C15 IO_L3N_T0_DQS_16
IO_L4P_T0_16 E13 IO_L4P_T0_16
IO_L4N_T0_16 E14 IO_L4N_T0_16
IO_L5P_T0_16 E16 IO_L5P_T0_16
IO_L5N_T0_16 D16 IO_L5N_T0_16
IO_L6P_T0_16 D14 IO_L6P_T0_16
IO_L6N_T0_VREF_16 D15 IO_L6N_T0_VREF_16
IO_L7P_T1_16 B15 IO_L7P_T1_16
IO_L7N_T1_16 B16 IO_L7N_T1_16
IO_L8P_T1_16 C13 IO_L8P_T1_16
IO_L8N_T1_16 B13 IO_L8N_T1_16
IO_L9P_T1_DQS_16 A15 IO_L9P_T1_DQS_16
IO_L9N_T1_DQS_16 A16 IO_L9N_T1_DQS_16
IO_L10P_T1_16 A13 IO_L10P_T1_16
IO_L10N_T1_16 A14 IO_L10N_T1_16
IO_L11P_T1_SRCC_16 B17 IO_L11P_T1_SRCC_16
IO_L11N_T1_SRCC_16 B18 IO_L11N_T1_SRCC_16
IO_L12P_T1_MRCC_16 D17 IO_L12P_T1_MRCC_16
IO_L12N_T1_MRCC_16 C17 IO_L12N_T1_MRCC_16
IO_L13P_T2_MRCC_16 C18 IO_L13P_T2_MRCC_16
IO_L13N_T2_MRCC_16 C19 IO_L13N_T2_MRCC_16
IO_L14P_T2_SRCC_16 E19 IO_L14P_T2_SRCC_16
IO_L14N_T2_SRCC_16 D19 IO_L14N_T2_SRCC_16
IO_L15P_T2_DQS_16 F18 IO_L15P_T2_DQS_16
IO_L15N_T2_DQS_16 E18 IO_L15N_T2_DQS_16
IO_L16P_T2_16 B20 S2
IO_L16N_T2_16 A20 S1
IO_L17P_T2_16 A18 IO_L17P_T2_16
IO_L17N_T2_16 A19 IO_L17N_T2_16
IO_L18P_T2_16 F19 IO_L18P_T2_16
IO_L18N_T2_16 F20 IO_L18N_T2_16
IO_L19P_T3_16 D20 IO_L19P_T3_16
IO_L19N_T3_VREF_16 C20 IO_L19N_T3_VREF_16
IO_L20P_T3_16 C22 SW6
IO_L20N_T3_16 B22 SW7
IO_L21P_T3_DQS_16 B21 S4
IO_L21N_T3_DQS_16 A21 S3
IO_L22P_T3_16 E22 SW2
IO_L22N_T3_16 D22 SW1
IO_L23P_T3_16 E21 SW4
IO_L23N_T3_16 D21 SW5
IO_L24P_T3_16 G21 SW3
IO_L24N_T3_16 G22 SW0
IO_25_16 F21 IR
XC7A35T-2FGG484C
U1E
BANK 35
IO_0_35 F4 SEG7_SCLK
IO_L1P_T0_AD4P_35 B1 CMOS_PCLK
IO_L1N_T0_AD4N_35 A1 CMOS_HREF
IO_L2P_T0_AD12P_35 C2 SEG7_RCLK
IO_L2N_T0_AD12N_35 B2 CMOS_VSYNC
IO_L3P_T0_DQS_AD5P_35 E1 CMOS_D7
IO_L3N_T0_DQS_AD5N_35 D1 CMOS_D6
IO_L4P_T0_35 E2 HDMI2_D0_P
IO_L4N_T0_35 D2 HDMI2_D0_N
IO_L5P_T0_AD13P_35 G1 CMOS_D2
IO_L5N_T0_AD13N_35 F1 CMOS_D4
IO_L6P_T0_35 F3 HDMI2_D1_P
IO_L6N_T0_VREF_35 E3 HDMI2_D1_N
IO_L7P_T1_AD6P_35 K1 HDMI2_SDA
IO_L7N_T1_AD6N_35 J1 CMOS_D1
IO_L8P_T1_AD14P_35 H2 CMOS_D3
IO_L8N_T1_AD14N_35 G2 CMOS_D5
IO_L9P_T1_DQS_AD7P_35 K2 HDMI2_OE
IO_L9N_T1_DQS_AD7N_35 J2 CMOS_D0
IO_L10P_T1_AD15P_35 J5 IO_L10P_T1_AD15P_35
IO_L10N_T1_AD15N_35 H5 HDMI1_OE
IO_L11P_T1_SRCC_35 H3 HDMI2_D2_P
IO_L11N_T1_SRCC_35 G3 HDMI2_D2_N
IO_L12P_T1_MRCC_35 H4 HDMI2_CLK_P
IO_L12N_T1_MRCC_35 G4 HDMI2_CLK_N
IO_L13P_T2_MRCC_35 K4 HDMI1_CLK_P
IO_L13N_T2_MRCC_35 J4 HDMI1_CLK_N
IO_L14P_T2_SRCC_35 L3 HDMI1_D0_P
IO_L14N_T2_SRCC_35 K3 HDMI1_D0_N
IO_L15P_T2_DQS_35 M1 HDMI1_HPD
IO_L15N_T2_DQS_35 L1 HDMI2_SCL
IO_L16P_T2_35 M3 HDMI1_D2_P
IO_L16N_T2_35 M2 HDMI1_D2_N
IO_L17P_T2_35 K6 IO_L17P_T2_35
IO_L17N_T2_35 J6 HDMI1_SDA
IO_L18P_T2_35 L5 HDMI1_D1_P
IO_L18N_T2_35 L4 HDMI1_D1_N
IO_L19P_T3_35 N4 IO_L19P_T3_35
IO_L19N_T3_VREF_35 N3 IO_L19N_T3_VREF_35
IO_L20P_T3_35 R1 IO_L20P_T3_35
IO_L20N_T3_35 P1 IO_L20N_T3_35
IO_L21P_T3_DQS_35 P5 IO_L21P_T3_DQS_35
IO_L21N_T3_DQS_35 P4 IO_L21N_T3_DQS_35
IO_L22P_T3_35 P2 IO_L22P_T3_35
IO_L22N_T3_35 N2 HDMI1_SCL
IO_L23P_T3_35 M6 IO_L23P_T3_35
IO_L23N_T3_35 M5 IO_L23N_T3_35
IO_L24P_T3_35 P6 IO_L24P_T3_35
IO_L24N_T3_35 N5 IO_L24N_T3_35
IO_25_35 L6 IO_25_35
XC7A35T-2FGG484C
VCC3V3
R1 470Ω
DONE
D1 RED
R7 240Ω
PW_GOOD R8 1KΩ
Q1 SS8050LT
GND
U1F
TDI_FPGA R13 TDI_0
TDO_FPGA U13 TDO_0
TCK V12 TCK_0
TMS T13 TMS_0
QSPI_SCK L12 CCLK_0
R2 1KΩ MODE0 U11 M0_0
U10 M1_0
U9 M2_0
DONE G11 DONE_0
R4 4.7KΩ U12 INIT_B_0
R6 4.7KΩ N12 PROGRAM_B_0
U8 CFGBVS_0
L10 VP_0
M9 VN_0
M10 VREFP_0
L9 VREFN_0
N10 DXP_0
N9 DXN_0
XC7A35T-2FGG484C
R132 4.7KΩ
R131 4.7KΩ
U3
QSPI_CS
QSPI_DQ1
QSPI_DQ2
nCS VCC
DATA nHOLD
nWP DCLK
GND ASDI
PAD
QSPI_DQ3
QSPI_SCK
QSPI_DQ0
C187 4.7uF
R133 4.7KΩ
N25Q128A13E
P1
IDC3-14
TMS
TCK
TDO_FPGA
TDI_FPGA
D2 BAT54S
D3 BAT54S
D4 BAT54S
D5 BAT54S
Title
Size A4
Number
Revision
Date: 2022-08-15
Sheet of
File: C:\Users\..\02_7A35T_FPGA_IO_Configure.SchDoc
Drawn By:

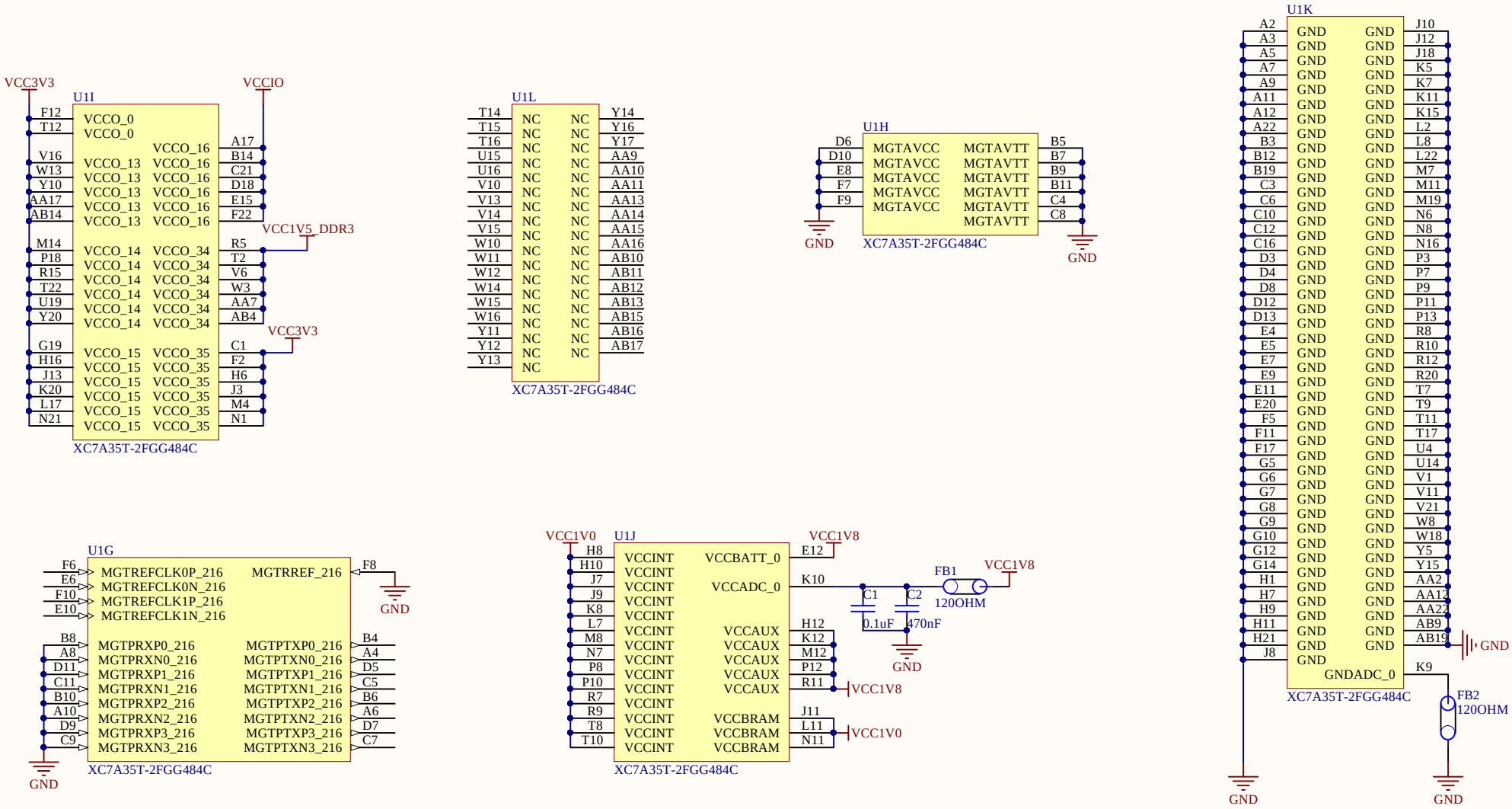

Title		
Size A4	Number	Revision
Date: 2022-08-15	Sheet of	
File: C:\Users\..\03_7A35T_FPGA_PowerBank.SchDoc	Drawn By:	

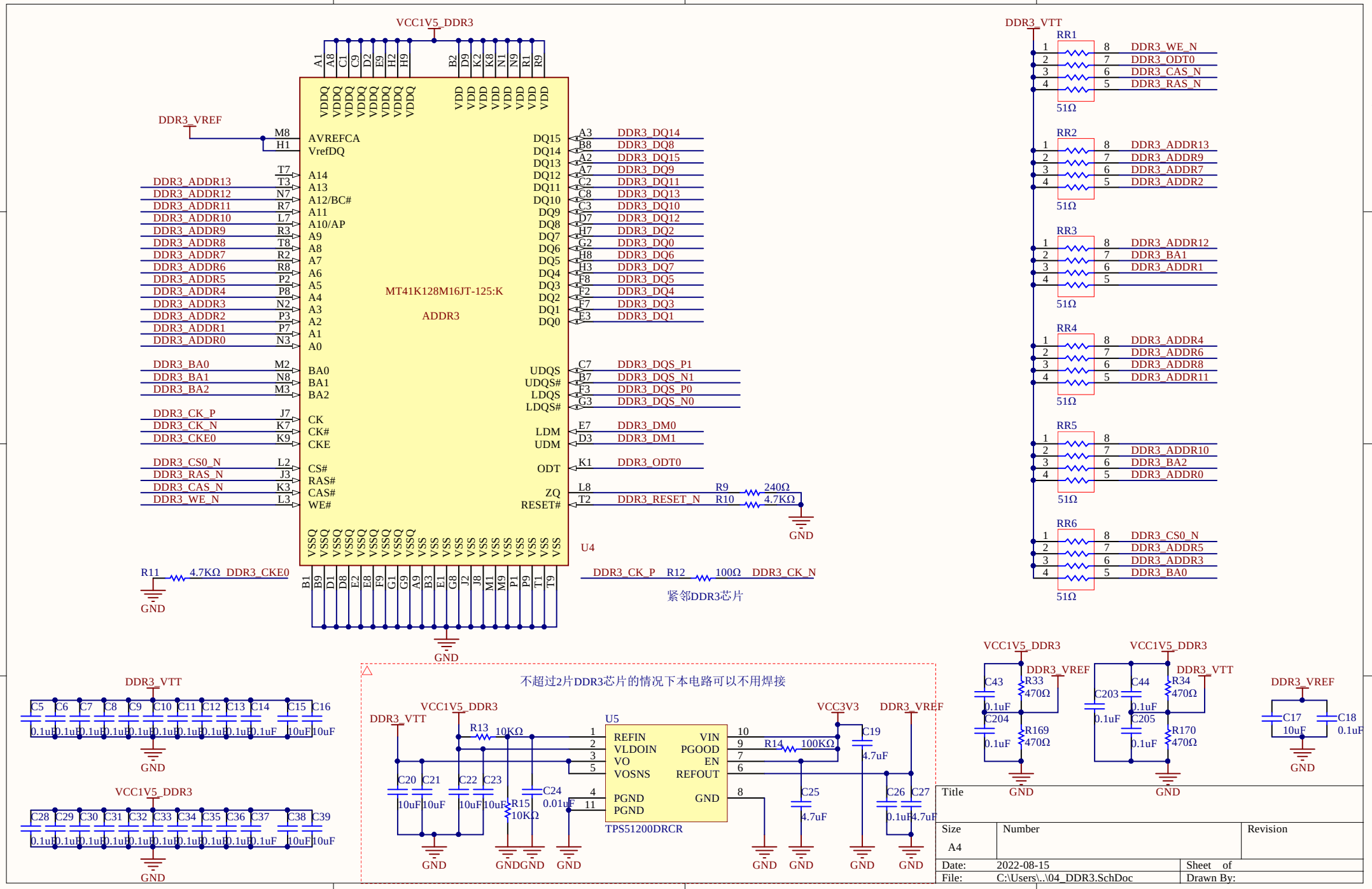
VCC1V5_DDR3
DDR3_VREF
DDR3_VTT
MT41K128M16JT-125:K
ADDR3
U4
AVREFCA
VrefDQ
A14
A13
A12/BC#
A11
A10/AP
A9
A8
A7
A6
A5
A4
A3
A2
A1
A0
BA0
BA1
BA2
CK
CK#
CKE
CS#
RAS#
CAS#
WE#
ZQ
RESET#
UDQS
UDQS#
LDQS
LDQS#
LDM
UDM
ODT
DQ15
DQ14
DQ13
DQ12
DQ11
DQ10
DQ9
DQ8
DQ7
DQ6
DQ5
DQ4
DQ3
DQ2
DQ1
DQ0
VDDQ
VDD
VSSQ
VSS
DDR3_ADDR13
DDR3_ADDR12
DDR3_ADDR11
DDR3_ADDR10
DDR3_ADDR9
DDR3_ADDR8
DDR3_ADDR7
DDR3_ADDR6
DDR3_ADDR5
DDR3_ADDR4
DDR3_ADDR3
DDR3_ADDR2
DDR3_ADDR1
DDR3_ADDR0
DDR3_BA0
DDR3_BA1
DDR3_BA2
DDR3_CK_P
DDR3_CK_N
DDR3_CKE0
DDR3_CS0_N
DDR3_RAS_N
DDR3_CAS_N
DDR3_WE_N
DDR3_DQ14
DDR3_DQ8
DDR3_DQ15
DDR3_DQ9
DDR3_DQ11
DDR3_DQ13
DDR3_DQ10
DDR3_DQ12
DDR3_DQ2
DDR3_DQ0
DDR3_DQ6
DDR3_DQ7
DDR3_DQ5
DDR3_DQ4
DDR3_DQ3
DDR3_DQ1
DDR3_DQS_P1
DDR3_DQS_N1
DDR3_DQS_P0
DDR3_DQS_N0
DDR3_DM0
DDR3_DM1
DDR3_ODT0
DDR3_RESET_N
R9 240Ω
R10 4.7KΩ
R11 4.7KΩ
R12 100Ω
紧邻DDR3芯片
RR1
RR2
RR3
RR4
RR5
RR6
51Ω
DDR3_WE_N
DDR3_ODT0
DDR3_CAS_N
DDR3_RAS_N
DDR3_ADDR13
DDR3_ADDR9
DDR3_ADDR7
DDR3_ADDR2
DDR3_ADDR12
DDR3_BA1
DDR3_ADDR1
DDR3_ADDR4
DDR3_ADDR6
DDR3_ADDR8
DDR3_ADDR11
DDR3_ADDR10
DDR3_BA2
DDR3_ADDR0
DDR3_CS0_N
DDR3_ADDR5
DDR3_ADDR3
DDR3_BA0
C5 C6 C7 C8 C9 C10 C11 C12 C13 C14 C15 C16
0.1uF 10uF
C28 C29 C30 C31 C32 C33 C34 C35 C36 C37 C38 C39
不超过2片DDR3芯片的情况下本电路可以不用焊接
U5
REFIN
VLDOIN
VO
VOSNS
PGND
VIN
PGOOD
EN
REFOUT
GND
TPS51200DRCR
VCC3V3
R13 10KΩ
R14 100KΩ
R15 10KΩ
C19 4.7uF
C20 C21 C22 C23 10uF
C24 0.01uF
C25 4.7uF
C26 C27 0.1uF 4.7uF
C43 C44 C203 C204 C205 0.1uF
R33 R34 R169 R170 470Ω
C17 10uF
C18 0.1uF
GND
Title
Size A4
Number
Revision
Date: 2022-08-15
File: C:\Users\..\04_DDR3.SchDoc
Sheet of
Drawn By:

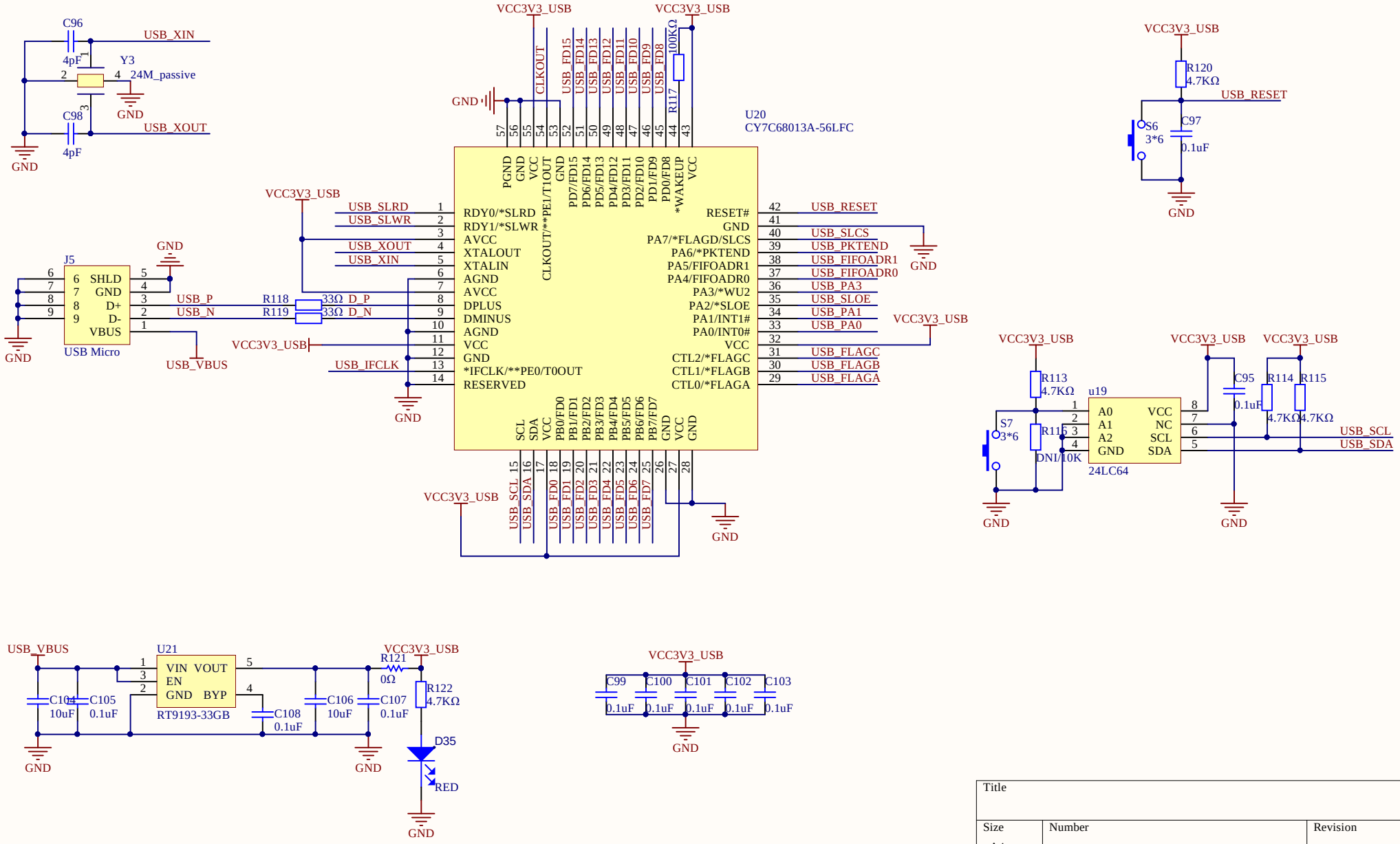

Title		
Size A4	Number	Revision
Date: 2022-08-15	Sheet of	
File: C:\Users\..\05_USB20_CY7C68013.SchDoc	Drawn By:	

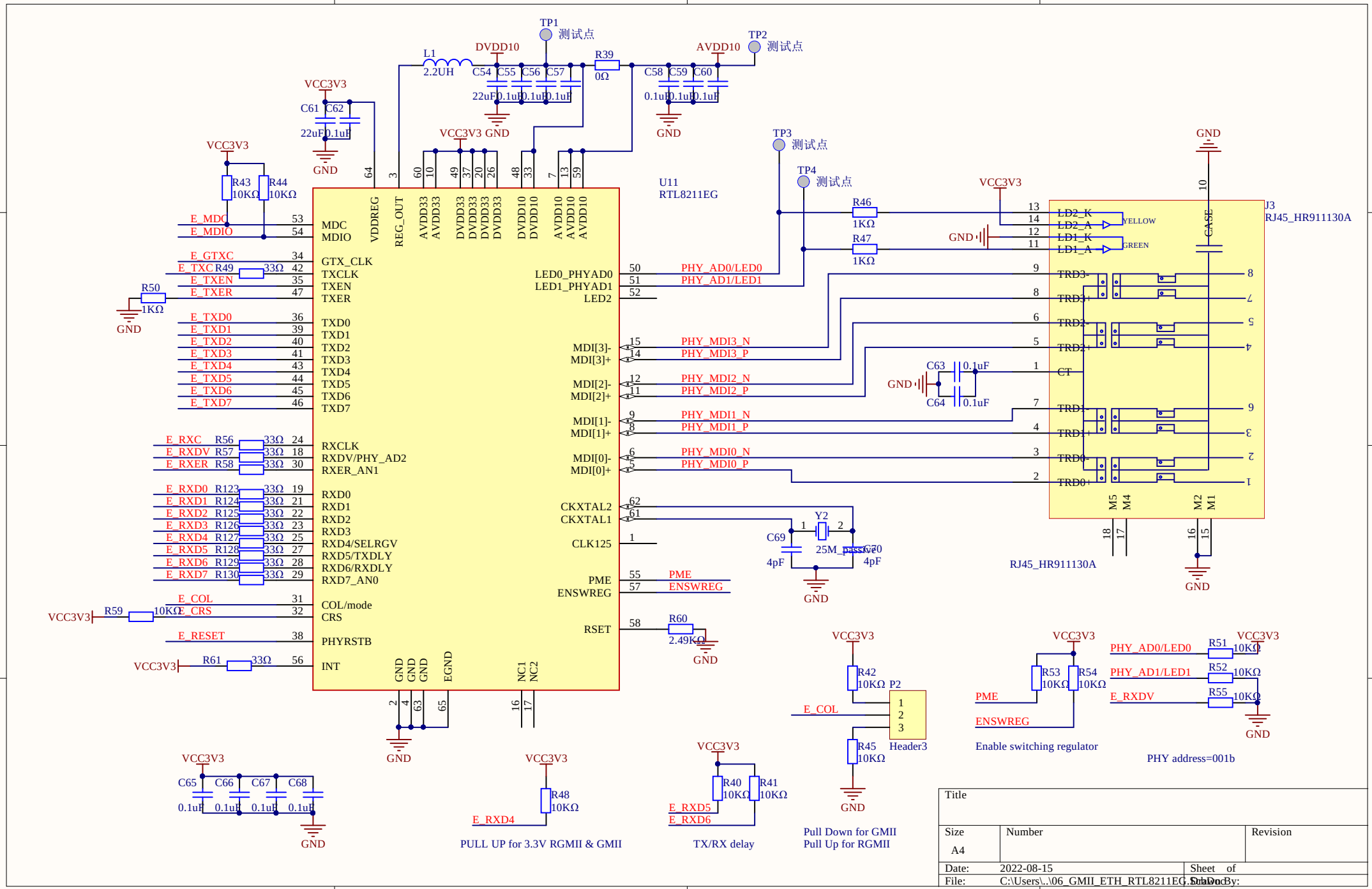
U11
RTL8211EG
J3
RJ45_HR911130A
TP1 测试点
TP2 测试点
TP3 测试点
TP4 测试点
DVDD10
AVDD10
VCC3V3
GND
L1 2.2UH
R39 0Ω
C54 C55 C56 C57 C58 C59 C60 C61 C62 C63 C64 C65 C66 C67 C68 C69 C70
22uF 0.1uF
R43 10KΩ
R44 10KΩ
R46 1KΩ
R47 1KΩ
R50 1KΩ
R49 33Ω
R56 R57 R58 R123 R124 R125 R126 R127 R128 R129 R130 33Ω
R59 10KΩ
R61 33Ω
R60 2.49KΩ
Y2 25M_passive
4pF
R42 10KΩ
R45 10KΩ
R40 10KΩ
R41 10KΩ
R48 10KΩ
R51 R52 R53 R54 R55 10KΩ
P2 Header3
E_MDC
E_MDIO
E_GTXC
E_TXC
E_TXEN
E_TXER
E_TXD0
E_TXD1
E_TXD2
E_TXD3
E_TXD4
E_TXD5
E_TXD6
E_TXD7
E_RXC
E_RXDV
E_RXER
E_RXD0
E_RXD1
E_RXD2
E_RXD3
E_RXD4
E_RXD5
E_RXD6
E_RXD7
E_COL
E_CRS
E_RESET
PHY_AD0/LED0
PHY_AD1/LED1
PHY_MDI3_N
PHY_MDI3_P
PHY_MDI2_N
PHY_MDI2_P
PHY_MDI1_N
PHY_MDI1_P
PHY_MDI0_N
PHY_MDI0_P
PME
ENSWREG
YELLOW
GREEN
CASE
Enable switching regulator
PHY address=001b
PULL UP for 3.3V RGMII & GMII
TX/RX delay
Pull Down for GMII
Pull Up for RGMII
Title
Size A4
Number
Revision
Date: 2022-08-15
Sheet of
File: C:\Users\..\06_GMII_ETH_RTL8211EG.SchDoc
Drawn By:

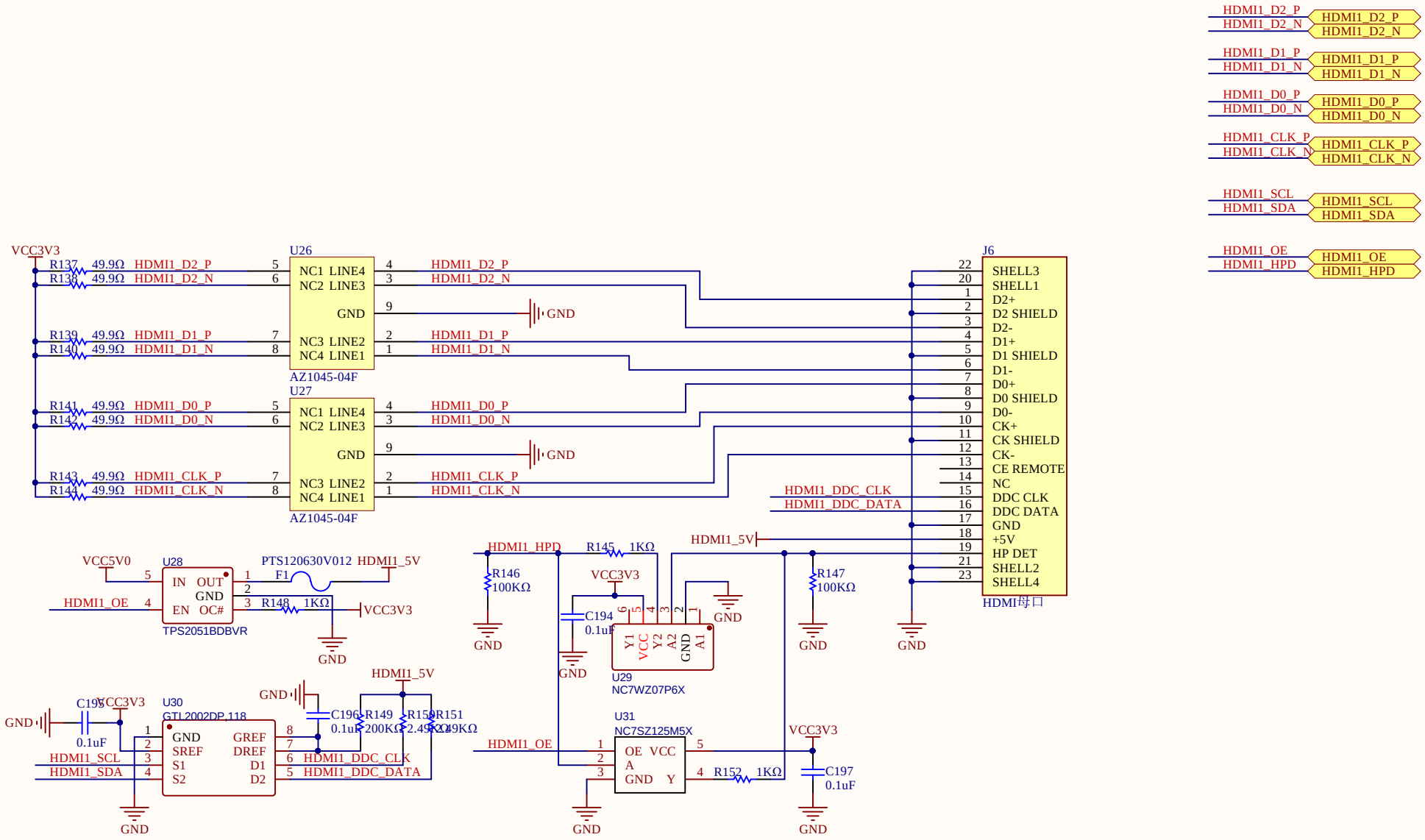

Title		
Size A4	Number	Revision
Date: 2022-08-15		Sheet of
File: C:\Users\..\07_HDMI1.SchDoc		Drawn By:

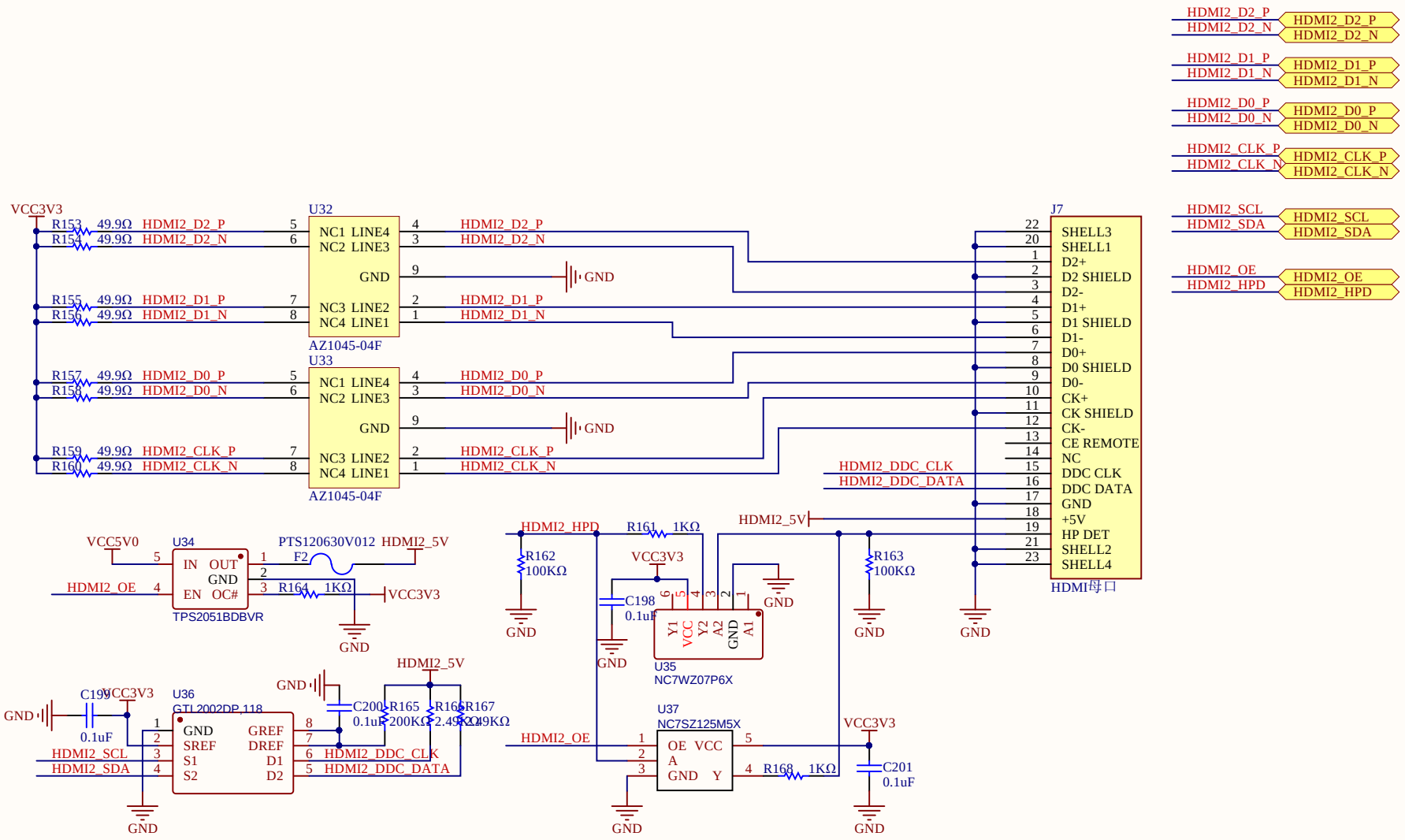

Title		
Size A4	Number	Revision
Date: 2022-08-15		Sheet of
File: C:\Users\..\08_HDMI2.SchDoc		Drawn By:

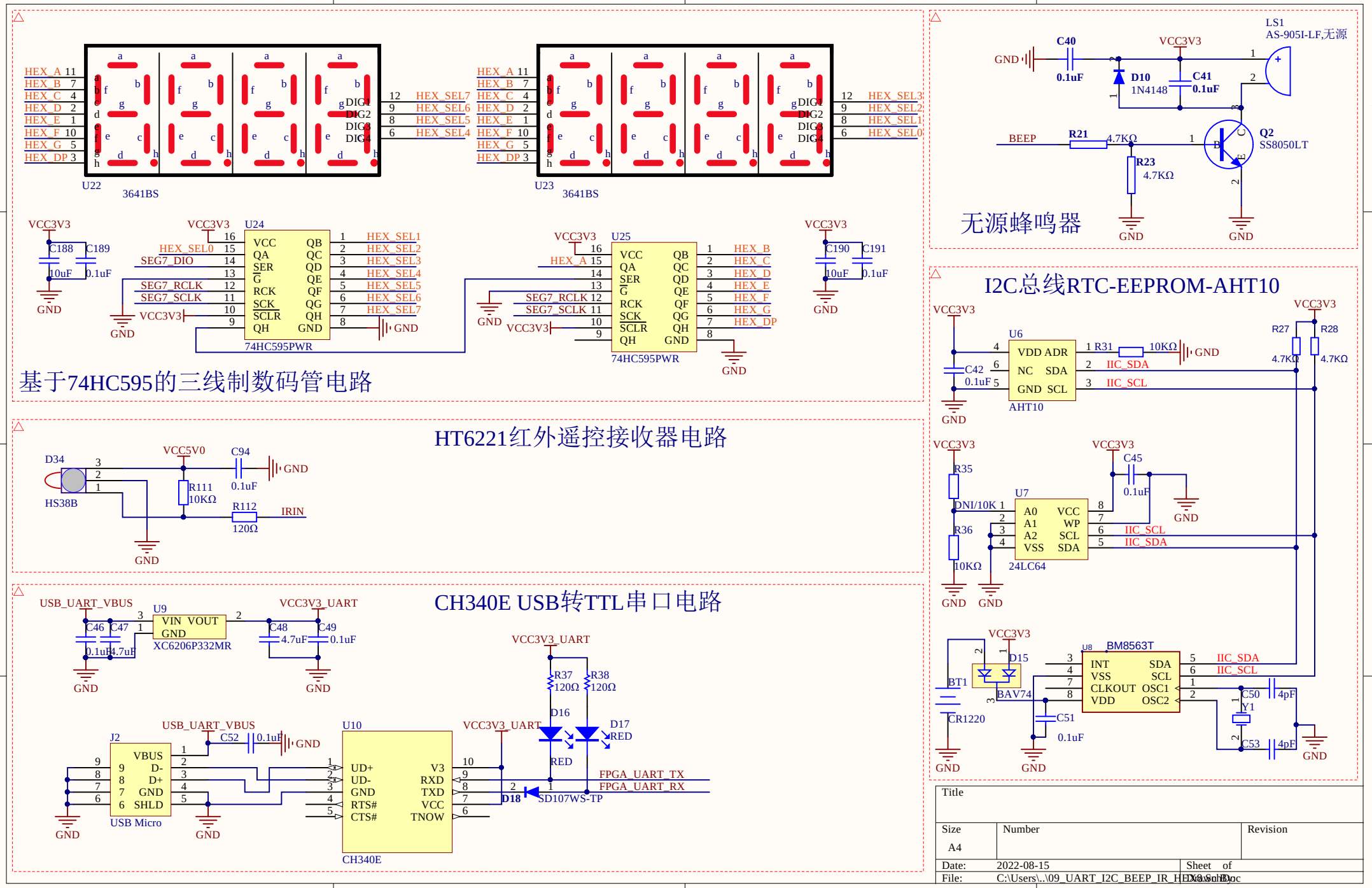

Title		
Size A4	Number	Revision
Date: 2022-08-15		Sheet of
File: C:\Users\..\09_UART_I2C_BEEP_IR_HEX.SchDoc		Drawn By:

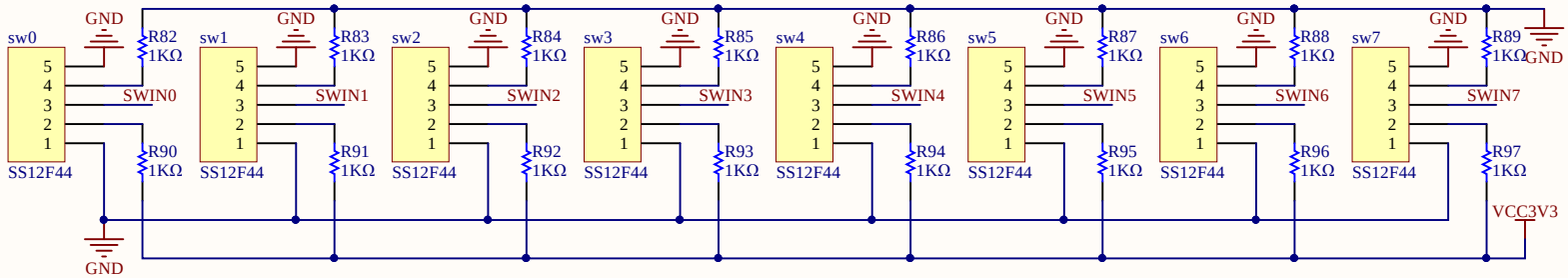

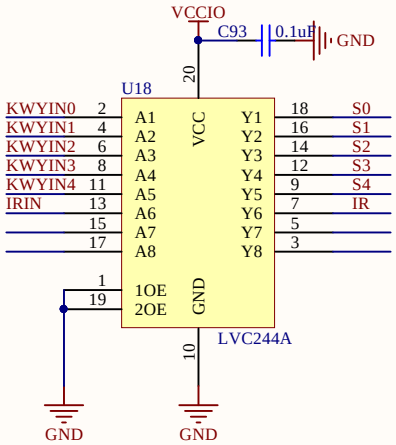

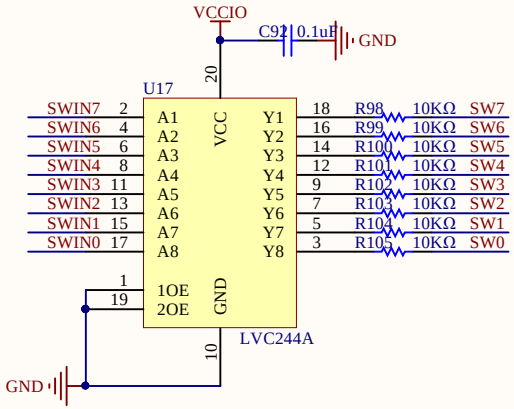

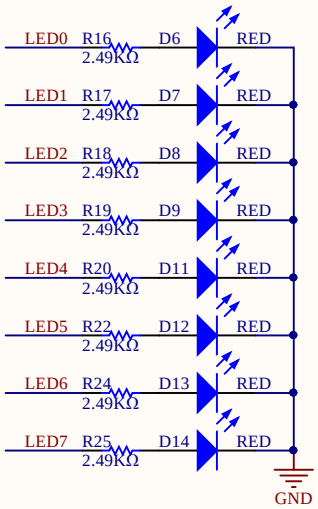

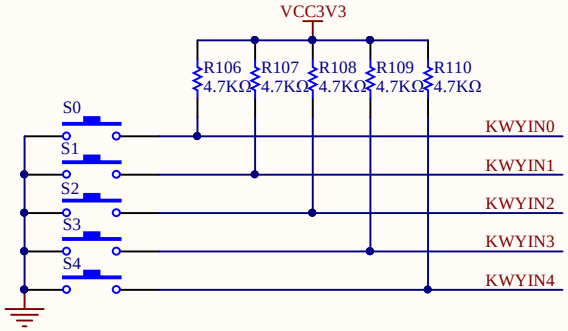

Title		
Size A4	Number	Revision
Date: 2022-08-15	Sheet of	
File: C:\Users\..\10_Switch_Key_Led.SchDoc	Drawn By:	

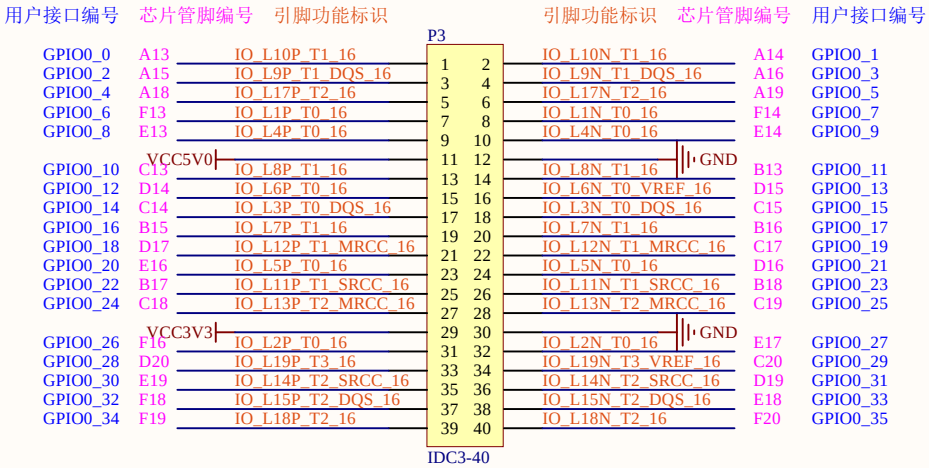

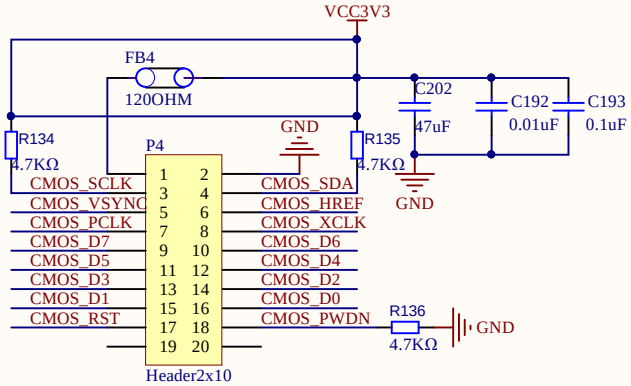

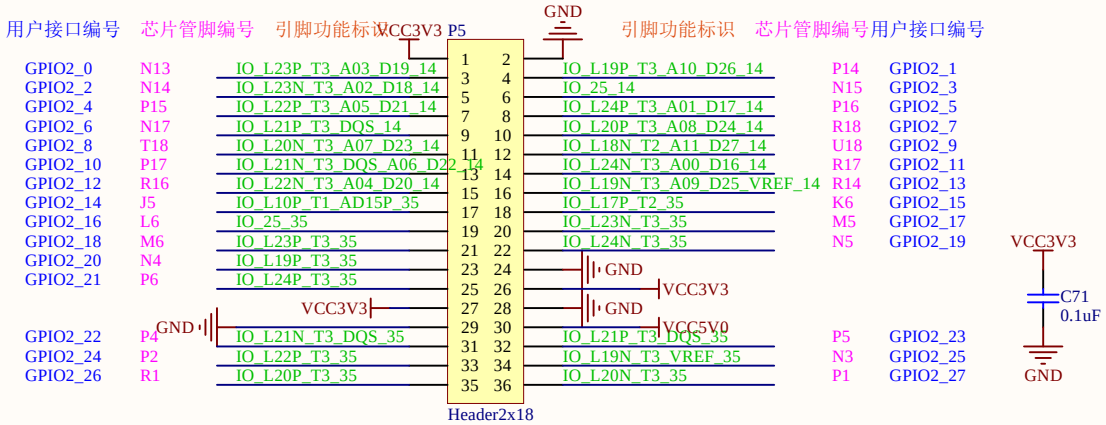

Title		
Size A4	Number	Revision
Date: 2022-08-15	Sheet of	
File: C:\Users\..\11_GPIO0_GPIO2_Camera.SchDoc	Drawn By:	

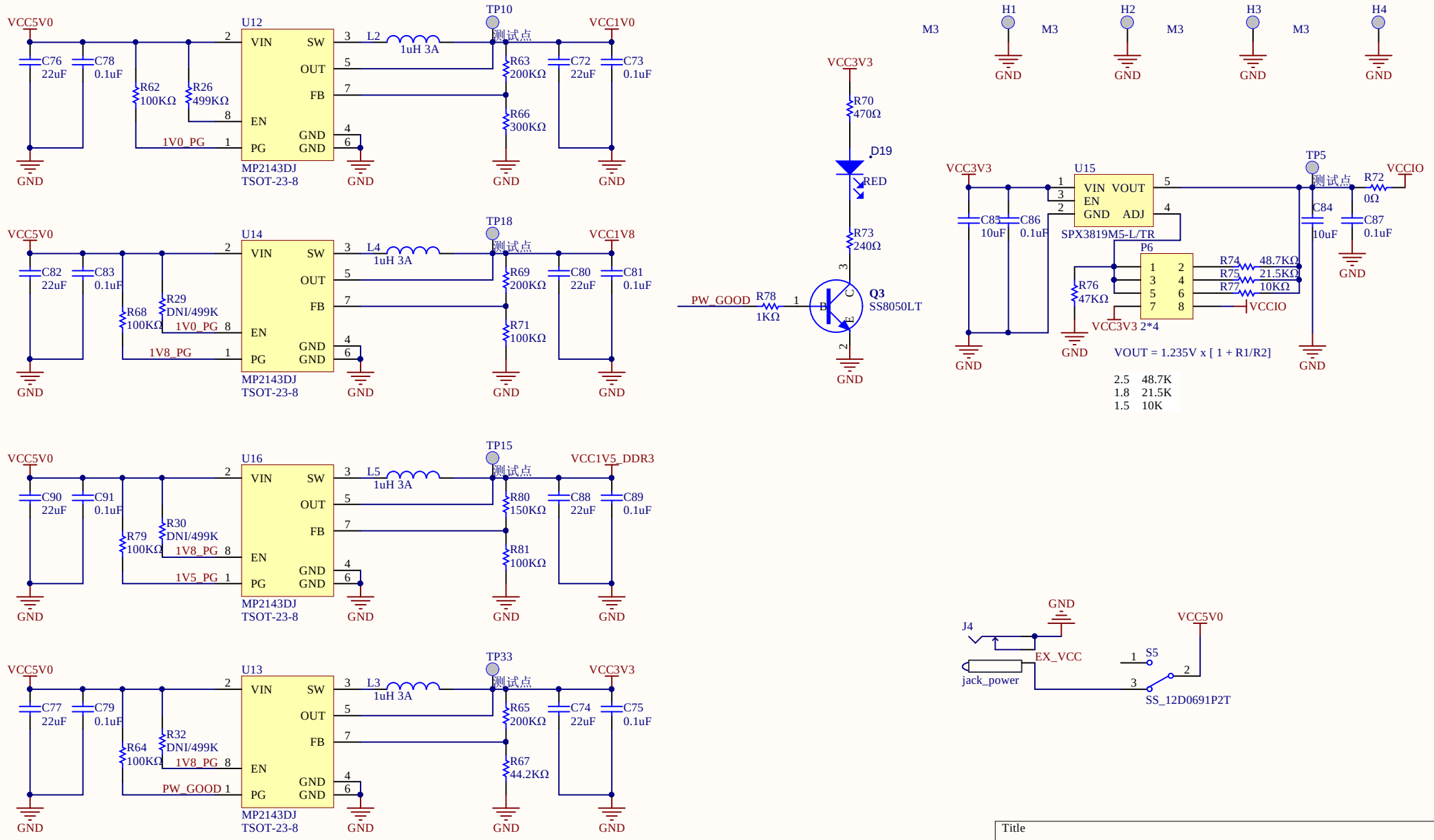

Title		
Size A4	Number	Revision
Date: 2022-08-15		Sheet of
File: C:\Users\..\12_BoardPower.SchDoc		Drawn By:

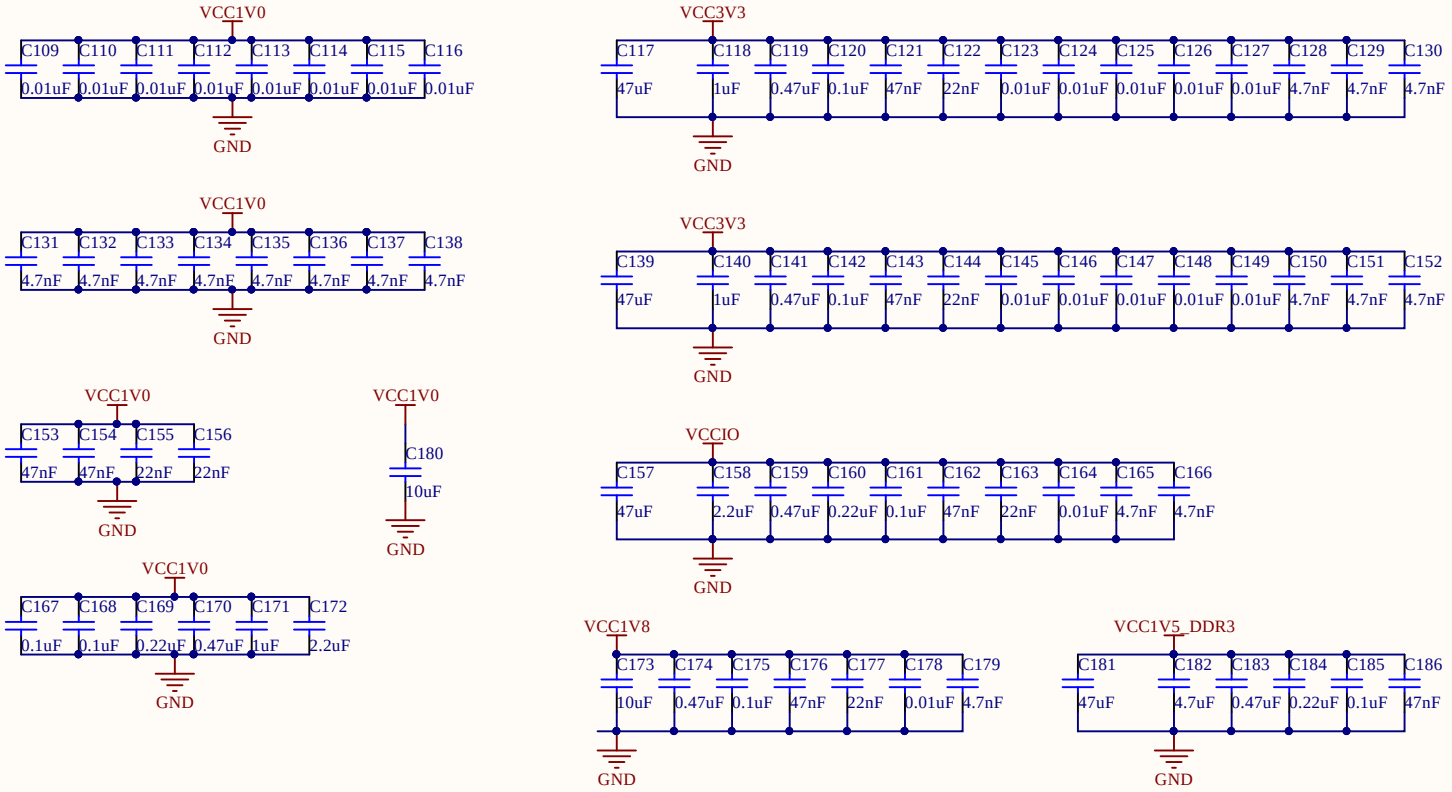

Title		
Size A4	Number	Revision
Date: 2022-08-15		Sheet of
File: C:\Users\..\13_Decoupling.SchDoc		Drawn By:

Comment	Designator	Footprint	Quantity	Value	供应商 1 订货号	供应商 2 订货号	供应商 3 订货号	元件描述	贴装方式	是否安装
CR1220	B1	CR1220	1	CR1220				纽扣电池座	SMT	否
0.1uF	C1, C3, C5, C6, C7, C8, C9, C10, C11, C12, C13, C14, C18, C26, C28, C29, C30, C31, C32, C33, C34, C35, C36, C37, C40, C41, C42, C43, C44, C45, C46, C49, C51, C52, C65, C66, C67, C68, C71, C73, C75, C78, C79, C81, C83, C86, C87, C89, C91, C92, C93, C94, C95, C97, C98, C100, C101, C102, C103, C105, C107, C108, C120, C142, C161, C167, C168, C175, C180, C184, C185, C186, C187, C188, C196, C200, C201, C203, C204, C208	C0402	80	0.1uF				贴片电容	SMT	是
470nF	C2	C0402	1	470nF				贴片电容	SMT	是
4.7uF	C4, C19, C25, C27, C31, C48, C127, C131, C138, C17, C20, C24, C23, C22, C173, C180	C0805	17	4.7uF				贴片电容	SMT	是
10uF	C15, C16, C21, C30, C38, C39, C40, C172, C182	C0603	11	10uF				贴片电容	SMT	是
0.01uF	C2A, C109, C110, C111, C112, C113, C114, C115, C116, C123, C124, C125, C126, C127, C145, C147, C148, C149, C164, C165	C0402	21	0.01uF				贴片电容	SMT	是
4pF	C50, C51, C66, C68	C0402	4	4pF				贴片电容	SMT	是
22uF	C5A, C61, C72, C74, C76, C77, C80, C82, C88, C90	C0805	10	22uF				贴片电容	SMT	是
0.1uF	C55, C56, C57, C58, C59, C60, C62, C63, C64, C189, C191, C193	C0603	12	0.1uF				贴片电容	SMT	是
4pF	C69, C70	C0603	2	4pF				贴片电容	SMT	是
10uF	C84, C85, C104, C106, C188, C190	C0805	6	10uF				贴片电容	SMT	是
47uF	C117, C139, C157, C181, C203	C1206	5	47uF				贴片电容	SMT	是
1uF	C118, C140, C171	C0603	3	1uF				贴片电容	SMT	是
0.47uF	C119, C141, C158, C176, C174, C184	C0402	6	0.47uF				贴片电容	SMT	是
47nF	C121, C143, C159, C154, C162, C176, C185	C0402	7	47nF				贴片电容	SMT	是
22nF	C122, C144, C195, C155, C163, C177	C0402	6	22nF				贴片电容	SMT	是
4.7nF	C128, C129, C130, C131, C132, C133, C134, C135, C136, C137, C138, C150, C151, C152, C195, C189, C170	C0402	17	4.7nF				贴片电容	SMT	是
2.2uF	C158, C172	C0603	2	2.2uF				贴片电容	SMT	否
0.22uF	C160, C169, C194	C0402	3	0.22uF				贴片电容	SMT	否
4.7uF	C182	C0603	1	4.7uF				贴片电容	SMT	否
0.01uF	C192	C0603	1	0.01uF				贴片电容	SMT	否
RED	D1, D6, D7, D8, D9, D11, D12, D13, D14, D16, D17, D18, D20	LED0603	13	RED				发光二极管	SMT	是
BAT54S	D2, D3, D4, D5	SOT-23	4	BAT54S				肖特基二极管	SMT	否
1N4148	D10	SOD323	1	1N4148				二极管	SMT	否
BAV74	D15	SOT-23	1	BAV74				开关二极管	SMT	否
SD107W5-7F	D19	SOD323	1	SD107W5-7F				二极管	SMT	否
HS388	D34	SP3	1	HS388				红外接收头	自插焊接	否
PTS1206X0V512	F1, F2	F1206	2	PTS1206X0V512				自恢复保险丝	SMT	否
120OHM	FB1, FB2, FB3	0805	3	120OHM				磁珠	SMT	否
120OHM	FB4	1206	1	120OHM				磁珠	SMT	否
M3	H1, H2, H3, H4	HOLES0715MM/3M/5TMPM-8/TM2	4	M3				机械孔	自插焊接	否
USB Micro	J2, J5	USB Micro	2	USB Micro				USB 母座	SMT	否
RJ45_HR911130A	J3	RJ45_HR911130C	1	RJ45_HR911130A				RJ45 千兆网口带变压器	自插焊接	否
jack_power	J4	jack_pwr	1	jack_power				DC3.5-1.35毛圆插头	自插焊接	否
HDMI母口	J6, J7	HDMI_A	2	HDMI母口				HDMI母口	SMT	否
2.2UH	L1	1210	1	2.2UH				功率电感	SMT	否
1uH 3A	L2, L3, L4, L5	7535x935x52	4	1uH 3A				功率电感	SMT	否
AS-005-LF 无铅	L11	8x6x3fix05	1	AS-005-LF 无铅				贴片电感	自插焊接	否
IDC3-14	P1	IDC3-14	1	IDC3-14				2.54MM双排牛角座	自插焊接	否
Header3	P2	HDR1X3	4	Header3				2.54MM排针	自插焊接	否
IDC3-40	P3	IDC-40J	1	IDC3-40				2.54MM双排牛角座	自插焊接	否
Header2x10	P4	HD20-100-A	1	Header2x10				2.54MM双排排针	自插焊接	否
Header2x18	P5	HDR2X18	1	Header2x18				2.54MM双排直插排针或母座	自插焊接	否
2*4	P6	HDR2X4	1	2*4				2.54MM排针	自插焊接	否
SS8050-T	Q1, Q2, Q3	SOT-23	3	SS8050-T				三极管	SMT	否
470Ω	R1, R33, R34, R70, R185, R186	R0603	6	470Ω				贴片电阻	SMT	否
1kΩ	R2, R6, R46, R47, R50, R78, R82, R83, R84, R85, R86, R87, R88, R89, R90, R91, R92, R93, R94, R95, R96, R97, R145, R148, R150, R151, R164, R165	R0603	28	1kΩ				贴片电阻	SMT	否
10kΩ	R3, R13, R15, R31, R36, R40, R41, R42, R43, R44, R45, R48, R51, R52, R53, R54, R55, R56, R77, R98, R99, R100, R101, R102, R103, R104, R105, R111	R0603	28	10kΩ				贴片电阻	SMT	否
4.7kΩ	R4, R8, R20, R21, R22, R27, R28, R106, R107, R108, R109, R110, R113, R114, R115, R120, R122, R123, R124, R125, R126, R128, R130, R132, R138	R0603	24	4.7kΩ				贴片电阻	SMT	否
33Ω	R5, R49, R56, R57, R58, R61, R118, R119, R123, R124, R125, R126, R127, R128, R129, R130, R131	R0603	16	33Ω				贴片电阻	SMT	否
240Ω	R7, R9, R73	R0603	3	240Ω				贴片电阻	SMT	否
100Ω	R12	R0603	1	100Ω				贴片电阻	SMT	否
100kΩ	R14, R62, R64, R66, R71, R76, R81, R117, R149, R152, R163, R166	R0603	12	100kΩ				贴片电阻	SMT	否
2.49kΩ	R16, R17, R18, R19, R24, R25, R60, R150, R151, R196, R197	R0603	12	2.49kΩ				贴片电阻	SMT	否
499kΩ	R26	R0603	1	499kΩ				贴片电阻	SMT	否
DNI499k	R29, R30, R32	R0603	3	DNI499k				贴片电阻	SMT	否
DNI100k	R35, R116	R0603	2	DNI100k				贴片电阻	SMT	否
120Ω	R37, R38, R112	R0603	3	120Ω				贴片电阻	SMT	否
0Ω	R39, R72, R121	R0603	3	0Ω				贴片电阻	SMT	否
209kΩ	R63, R65, R69, R146, R196	R0603	5	209kΩ				贴片电阻	SMT	否
300kΩ	R68	R0603	1	300kΩ				贴片电阻	SMT	否
44.2kΩ	R67	R0603	1	44.2kΩ				贴片电阻	SMT	否
48.7kΩ	R74	R0603	1	48.7kΩ				贴片电阻	SMT	否
21.5kΩ	R75	R0603	1	21.5kΩ				贴片电阻	SMT	否
47kΩ	R79	R0603	1	47kΩ				贴片电阻	SMT	否
100kΩ	R80	R0603	1	100kΩ				贴片电阻	SMT	否
49.9Ω	R137, R138, R139, R140, R141, R142, R143, R144, R153, R154, R155, R156, R157, R158, R159, R160	R0603	16	49.9Ω				贴片电阻	SMT	否
51Ω	R91, R92, R93, R94, R95, R96, R97, R98, R1, S2, S3, S4, S5, S6, S7	0N0402	4	51Ω				贴片排阻	SMT	否
3*6	SW-PB_3_6_4_3		7	3*6				2脚轻触按键	SMT	否
SS_12D06G1P2T	S1	SS12D06_1P2T_	1	SS_12D06G1P2T				3脚2挡侧向大电流拨动开关	自插焊接	否
SS12F44	S2	SW-1x2	8	SS12F44				2挡拨动开关	自插焊接	否
测试点	sw1, sw2, sw3, sw4, sw5, sw6, sw7, TP1, TP2, TP3, TP4, TP5, TP10, TP15, TP16, TP20	tp32	16	测试点				电源和信号测试点	机械钻孔	否
ICTA3E7-2FGG484C	U1	FCG484	1	ICTA3E7-2FGG484C				FPGA	SMT	否
SDM_Active	U2	sd-0706	1	SDM_Active				时钟晶振	SMT	否
N25Q128A13E	U3	VDFPN8-1x27-080N	1	N25Q128A13E				板载电路	SMT	否
MT40A128M16JT-125:K	U4	BGA96-32-0916	1	MT40A128M16JT-125:K				DDR3 存储器	SMT	否
TPS51200DRCR	U5	VSON-10	1	TPS51200DRCR				板载电路	SMT	否
AMT10	U6	AMT10	1	AMT10				板载电路	SMT	否
24LC64	U7, u19	SOIC8	2	24LC64				板载电路	SMT	否
93AB56T	U8	SOIC8	1	93AB56T				板载电路	SMT	否
SC625F332M5	U9	SOT-23	1	SC625F332M5				板载电路	SMT	否
CH340E	U10	msop-10	1	CH340E				板载电路	SMT	否
RT6211GC	U11	qfn64-050-0909	1	RT6211GC				板载电路	SMT	否
MP2143DJ	U12, U13, U14, U15	SOT23-8	4	MP2143DJ				板载电路	SMT	否
SPX3819M5-L-TR	U16	SOT-23-5	1	SPX3819M5-L-TR		C9055		板载电路	SMT	否
LVC244A	U17, U18	tssop20	2	LVC244A				板载电路	SMT	否
LVDC8B013A-MUCG	U20	SOT-23-6	1	LVDC8B013A-MUCG				板载电路	SMT	否
87610ID-23GB	U21	SOT-23-5	1	87610ID-23GB				板载电路	SMT	否
364185	U22, U23	DIG4	2	364185				8.38 寸 4 位共阳数码管	自插焊接	否
74HC595PWR	U24, U25	tssop16	2	74HC595PWR				板载电路	SMT	否
AZ1045-04F	U26, U27, U32, U33	SJ2771009	4	AZ1045-04F				板载电路	SMT	否
TPS2051BDBVR	U28, U34	SOT-23-5	2	TPS2051BDBVR				板载电路	SMT	否
NCTW207PRX	U29, U35	SOT-363	2	NCTW207PRX				板载电路	SMT	否
CJ7L20105F-1L8	U30, U36	SSOP8	2	CJ7L20105F-1L8				板载电路	SMT	否
NCT6213NMXV	U31, U37	SOT-23-5	2	NCT6213NMXV				板载电路	SMT	否
32.768K	Y1	z-3215	1	32.768K				无源晶振	SMT	否
25M_passive	Y2	4SL SMT	1	25M_passive				无源晶振	SMT	否
24M_passive	Y3	sl-3225	1	24M_passive				无源晶振	SMT	否