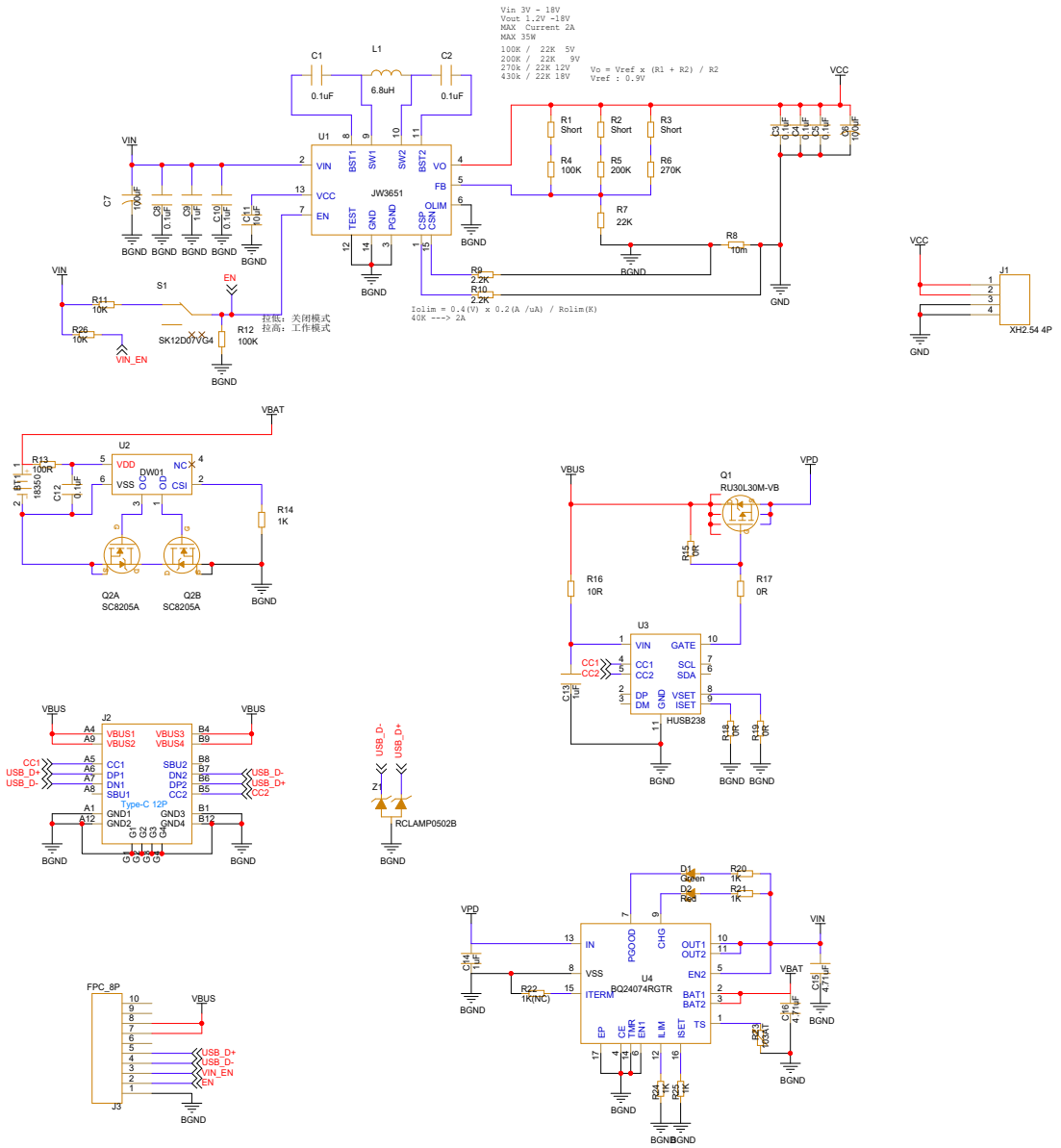

Title	Mini_Audio	
Size C	Document Number <Doc>	Rev V1.0
Date: Thursday, February 01, 2024	Sheet 1 of 1	