1. ALL RESISTANCE VALUES ARE IN OHMS, 0.1 WATT +/- 5%.
2. ALL CAPACITANCE VALUES ARE IN MICROFARADS.
3. ALL CRYSTALS & OSCILLATOR VALUES ARE IN HERTZ.

REV	ECN	DESCRIPTION OF REVISION	CK APPD	DATE
9	0008409760	ENGINEERING RELEASED		2017-04-05

X891/X893 MLB Top: EVT

LAST_MODIFICATION=Mon Apr 3 13:03:06 2017

PAGE	CSA	CONTENTS	SYNC	DATE
1	1	TABLE OF CONTENTS		
2	2	SYSTEM:BOM Tables	test_mlb	10/13/2016
3	4	SYSTEM: Mechanical Components		
4	5	SYSTEM: Testpoints (Top)	test_mlb	10/13/2016
5	6	BOOTSTRAPPING	test_mlb	10/13/2016
6	10	SOC: JTAG,USB,XTAL	test_mlb	10/17/2016
7	11	SOC: PCIE	test_mlb	10/17/2016
8	12	SOC: MIPI & ISP	test_mlb	10/13/2016
9	13	SOC: LPDP	test_mlb	10/13/2016
10	14	SOC: Serial	test_mlb	10/17/2016
11	15	SOC: GPIO & UART	test_mlb	10/13/2016
12	16	SOC: AOP	test_mlb	10/17/2016
13	17	SOC: Power (1/3)	test_mlb	10/17/2016
14	18	SOC: Power (2/3)	test_mlb	10/17/2016
15	19	SOC: Power (3/3)	test_mlb	10/17/2016
16	26	NAND	test_mlb	10/13/2016
17	27	SYSTEM POWER: PMU Bucks (1/4)	test_mlb	10/13/2016
18	28	SYSTEM POWER: PMU Bucks (2/4)	test_mlb	10/13/2016
19	29	SYSTEM POWER: PMU LDOs (3/4)	test_mlb	10/13/2016
20	30	SYSTEM POWER: PMU (4/4)	test_mlb	11/01/2016
21	31	SYSTEM POWER: Boost	test_mlb	10/13/2016
22	32	SYSTEM POWER: B2B Battery	test_mlb	10/13/2016
23	33	SYSTEM POWER: Charger	test_mlb	10/13/2016
24	34	SYSTEM POWER: Iktara		
25	35	SYSTEM POWER: B2B Cyclone + Button	test_mlb	10/13/2016
26	36	SENSORS	test_mlb	10/13/2016
27	37	CAMERA: PMU (1/2)	test_mlb	10/13/2016
28	38	CAMERA: PMU (2/2)	test_mlb	10/13/2016
29	39	CAMERA: B2B Wide (WY)	test_mlb	10/13/2016
30	40	CAMERA: B2B Tele (MT)	test_mlb	10/13/2016
31	41	CAMERA: Strobe Drivers	test_mlb	10/13/2016
32	42	CAMERA: B2B FCAM	test_mlb	10/13/2016
33	43	CAMERA: B2B Strobe + Hold Button	test_mlb	10/13/2016
34	44	PEARL: Power	test_mlb	10/13/2016
35	45	PEARL: B2B Romeo + Juliet	test_mlb	10/13/2016
36	46	PEARL: B2B Rosaline + Misc	test_mlb	10/13/2016
37	47	AUDIO: CODEC (1/2)	test_mlb	10/13/2016
38	48	AUDIO: CODEC (2/2)	test_mlb	10/13/2016
39	49	AUDIO: Speaker Amp Bottom		08/25/2015
40	50	AUDIO: Speaker Amp Top		08/25/2015
41	51	ARC: Driver	test_mlb	10/13/2016
42	56	CG: Power Supplies - Touch & Display	test_mlb	10/13/2016
43	57	CG: B2B Display	test_mlb	10/13/2016
44	58	CG: B2B Orb & Touch		08/25/2015
45	59	I/O: Overvoltage Cut-Off Circuit	sync	01/10/2017

PAGE	CSA	CONTENTS	SYNC	DATE
46	61	I/O: Accessory Buck	test_mlb	10/17/2016
47	62	I/O: USB PD	test_mlb	10/13/2016
48	63	I/O: Hydra	test_mlb	10/13/2016
49	64	I/O: B2B Dock	test_mlb	10/13/2016
50	65	I/O: Interposer (Bottom)	test_mlb	10/13/2016
51	80	RADIOS		06/04/2015

BOM:639-04583 (Ultimate)
BOM:639-03409 (Extreme)
MCO:056-04077

PART#	QTY	DESCRIPTION	REFERENCE DESIGNATOR(S)	CRITICAL	BOM OPTION
051-02221	1	SCH,MLB_TOP,X891	SCH	NO	COMMON
820-00863	1	PCB,MLB_TOP,X891	PCB	NO	COMMON

TABLE OF CONTENTS

DRAWING TITLE
SCH,MLB,TOP,X891

Apple Inc.

DRAWING NUMBER 051-02221
SIZE D
REVISION 9.0.0
BRANCH evt-1
PAGE 1 OF 80
SHEET 1 OF 51

NOTICE OF PROPRIETARY PROPERTY:

THE INFORMATION CONTAINED HEREIN IS THE PROPRIETARY PROPERTY OF APPLE INC.
THE POSESSOR AGREES TO THE FOLLOWING:
I TO MAINTAIN THIS DOCUMENT IN CONFIDENCE
II NOT TO REPRODUCE OR COPY IT
III NOT TO REVEAL OR PUBLISH IT IN WHOLE OR PART
IV ALL RIGHTS RESERVED

EEEE Codes

PART#	QTY	DESCRIPTION	REFERENCE DESIGNATOR(S)	CRITICAL	BOM OPTION
825-7691	1	EEEE FOR (MLB_TOP,639-04583,ULTIMATE)	EEEE_J2WJ	NO	ULTIMATE
825-7691	1	EEEE FOR (MLB_TOP,639-03409,EXTREME)	EEEE_HP26	NO	EXTREME

SOC

PART#	QTY	DESCRIPTION	REFERENCE DESIGNATOR(S)	CRITICAL	BOM OPTION
339S00358	1	SKYE+3GB, B0, M, DEV	U1000	CRITICAL	COMMON

PART NUMBER	ALTERNATE FOR PART NUMBER	BOM OPTION	REF DES	COMMENTS:
339S00359	339S00358	BOM_TABLE_ALTS	U1000	DDR-H,3G, B0
339S00360	339S00358	BOM_TABLE_ALTS	U1000	DDR-S-20,3G, B0
339S00361	339S00358	BOM_TABLE_ALTS	U1000	DDR-S-18,3G, B0

NAND

Ultimate

PART#	QTY	DESCRIPTION	REFERENCE DESIGNATOR(S)	CRITICAL	BOM OPTION
335S00287	1	HYNIX, 3DV3, ULTIMATE	U2600	CRITICAL	ULTIMATE

PART NUMBER	ALTERNATE FOR PART NUMBER	BOM OPTION	REF DES	COMMENTS:
335S00284	335S00287	BOM_TABLE_ALTS	U2600	TOSHIBA, 1Z, ULTIMATE
335S00285	335S00287	BOM_TABLE_ALTS	U2600	TOSHIBA, BICS3, ULTIMATE
335S00286	335S00287	BOM_TABLE_ALTS	U2600	SANDISK, BICS3, ULTIMATE
335S00288	335S00287	BOM_TABLE_ALTS	U2600	SAMSUNG, 3DV4, ULTIMATE

Extreme

PART#	QTY	DESCRIPTION	REFERENCE DESIGNATOR(S)	CRITICAL	BOM OPTION
335S00240	1	HYNIX, 3DV3, EXTREME	U2600	CRITICAL	EXTREME

PART NUMBER	ALTERNATE FOR PART NUMBER	BOM OPTION	REF DES	COMMENTS:
335S00228	335S00240	BOM_TABLE_ALTS	U2600	TOSHIBA, BICS3, EXTREME
335S00247	335S00240	BOM_TABLE_ALTS	U2600	SANDISK, BICS3, EXTREME
335S00276	335S00240	BOM_TABLE_ALTS	U2600	SAMSUNG, 3DV4, EXTREME

Global Capacitors

PART NUMBER	ALTERNATE FOR PART NUMBER	BOM OPTION	REF DES	COMMENTS:
138S00148	138S00149	BOM_TABLE_ALTS	ALL	0402-3T,10.5uF@1V, Kyocera
138S00150	138S00149	BOM_TABLE_ALTS	ALL	0402-3T,10.5uF@1V, SEMCO
138S00151	138S00149	BOM_TABLE_ALTS	ALL	0402-3T,10.5uF@1V, TY

CRITICAL PART#	COMMENT
138S00149	0402-3T,10.5uF@1V

PART NUMBER	ALTERNATE FOR PART NUMBER	BOM OPTION	REF DES	COMMENTS:
138S00143	138S00144	BOM_TABLE_ALTS	ALL	0402,16uF@1V, Kyocera
138S00163	138S00144	BOM_TABLE_ALTS	ALL	0402,16uF@1V, Taiyo

CRITICAL PART#	COMMENT
138S00144	0402,16uF@1V

PART NUMBER	ALTERNATE FOR PART NUMBER	BOM OPTION	REF DES	COMMENTS:
138S00138	138S00139	BOM_TABLE_ALTS	ALL	0201,3uF@1V, Kyocera
138S00164	138S00139	BOM_TABLE_ALTS	ALL	0201,3uF@1V, Taiyo

CRITICAL PART#	COMMENT
138S00139	0201,3uF@1V

PART NUMBER	ALTERNATE FOR PART NUMBER	BOM OPTION	REF DES	COMMENTS:
138S00145	138S00146	BOM_TABLE_ALTS	ALL	0402,5.1uF@3V, Kyocera
138S00165	138S00146	BOM_TABLE_ALTS	ALL	0402,5.1uF@3V, Taiyo

CRITICAL PART#	COMMENT
138S00146	0402,5.1uF@3V

PART NUMBER	ALTERNATE FOR PART NUMBER	BOM OPTION	REF DES	COMMENTS:
138S00140	138S00141	BOM_TABLE_ALTS	ALL	0201,1.1uF@3V, Kyocera
138S00142	138S00141	BOM_TABLE_ALTS	ALL	0201,1.1uF@3V, SEMCO
138S00166	138S00141	BOM_TABLE_ALTS	ALL	0201,1.1uF@3V, Taiyo

CRITICAL PART#	COMMENT
138S00141	0201,1.1uF@3V

Global Ferrites

PART NUMBER	ALTERNATE FOR PART NUMBER	BOM OPTION	REF DES	COMMENTS:
155S00194	155S0610	BOM_TABLE_ALTS	ALL	FERR BD, 150OHM, TDK
155S00200	155S0610	BOM_TABLE_ALTS	ALL	FERR BD, 150OHM, TY

CRITICAL PART#	COMMENT
155S0610	FERR BD, 150OHM, 01005

Global R/C Alternates

PART NUMBER	ALTERNATE FOR PART NUMBER	BOM OPTION	REF DES	COMMENTS:
118S0764	118S0717	BOM_TABLE_ALTS	ALL	RES, 3.92K, 0.1%, 0201
138S0648	138S0652	BOM_TABLE_ALTS	ALL	CAP,X5R,4.7UF,6.3V,0.65MM,0402,TAIYO
138S0739	138S0706	BOM_TABLE_ALTS	ALL	CAP,CER,X5R,0.22UF,20%,6.3V,20%
132S0436	132S0400	BOM_TABLE_ALTS	ALL	CAP,CER,X5R,0.22UF,20%,6.3V,01005
138S00049	138S0831	BOM_TABLE_ALTS	ALL	CAP,CER,X5R,2.2UF,20%,6.3V,0201

CRITICAL PART#	COMMENT
118S0717	RES, 3.92K, 0.1%, 0201
138S0652	CAP,X5R,4.7UF,6.3V,0.65MM,0402
138S0706	CAP,CER,X5R,0.22UF,20%,6.3V,20%
132S0400	CAP,CER,X5R,0.22UF,20%,6.3V,01005
138S0831	CAP,CER,X5R,2.2UF,20%,6.3V,0201

Global Inductors

PART NUMBER	ALTERNATE FOR PART NUMBER	BOM OPTION	REF DES	COMMENTS:
152S00710	152S00617	BOM_TABLE_ALTS	ALL	IND,MLD,0.1UH,20%,6.1A,29MOHM,H=.65,1608
152S00712	152S00620	BOM_TABLE_ALTS	ALL	IND,MLD,0.1UH,20%,7.2A,17MOHM,H=0.8,2012
152S00713	152S00621	BOM_TABLE_ALTS	ALL	IND,MLD,0.47UH,20%,3.5A,53MO,H=.65,2012
152S00714	152S00622	BOM_TABLE_ALTS	ALL	IND,MLD,1.0UH,20%,2.1A,100MO,H=.65,2012
152S00716	152S00626	BOM_TABLE_ALTS	ALL	IND,MLD,1.5UH,20%,1.1A,160MO,H=.65,2012
152S00717	152S00631	BOM_TABLE_ALTS	ALL	IND,MLD,1.0UH,20%,2.5A,78MO,H=0.8,2012
152S00718	152S00632	BOM_TABLE_ALTS	ALL	IND,MLD,1.0UH,20%,3.2A,60MO,H=0.8,2016
152S00720	152S00640	BOM_TABLE_ALTS	ALL	IND,MLD,0.47UH,3.8A,55MO,H=0.65MM,2012
152S00721	152S00641	BOM_TABLE_ALTS	ALL	IND,MLD,0.47UH,4A,48MO,H=0.8MM,2012
152S00715	152S00623	BOM_TABLE_ALTS	ALL	IND,MLD,1UH,3.6A,60MO,H=0.8MM,2016
152S00653	152S00651	BOM_TABLE_ALTS	ALL	IND,1.2UH,3A,2016,0.65Z
152S00649	152S00650	BOM_TABLE_ALTS	L3340,L3341	IND,0.47UH,6.6A,3225,0.8Z

CRITICAL PART#	COMMENT
152S00617	IND,MLD,0.1UH,20%,6.1A,29MOHM,H=.65,1608
152S00620	IND,MLD,0.1UH,20%,7.2A,17MOHM,H=0.8,2012
152S00621	IND,MLD,0.47UH,20%,3.5A,53MO,H=.65,2012
152S00622	IND,MLD,1.0UH,20%,2.1A,100MO,H=.65,2012
152S00626	IND,MLD,1.5UH,20%,1.1A,160MO,H=.65,2012
152S00631	IND,MLD,1.0UH,20%,2.5A,78MO,H=0.8,2012
152S00632	IND,MLD,1.0UH,20%,3.2A,60MO,H=0.8,2016
152S00640	IND,MLD,0.47UH,3.8A,55MO,H=0.65MM,2012
152S00641	IND,MLD,0.47UH,4A,48MO,H=0.8MM,2012
152S00623	IND,MLD,1UH,3.6A,60MO,H=0.8MM,2016
152S00651	IND,1.2UH, 3A, 2016, 0.65Z
152S00650	IND,0.47UH,6.6A,3225,0.8Z

XTAL Alternate

PART NUMBER	ALTERNATE FOR PART NUMBER	BOM OPTION	REF DES	COMMENTS:
197S0612	197S0446	BOM_TABLE_ALTS	Y1000	XTAL, 24M, 1612

CRITICAL PART#	COMMENT
197S0446	XTAL, 24M, 1612

Multi-Vendor Criticals

CRITICAL PART#	COMMENT
377S0106	SUPPR,TRANS,VARISTOR,12V,33PF,01005
197S0446	XTAL,24MHZ,30PPM,9.5PF,60 OHM MAX,1612
155S0576	FERR BD,10 OHM,50%,750MA,0.07 DCR,01005
155S00168	FLTR,NOISE,65 OHMZ,3.4OHM,0.7-2GHZ,0605
138S0979	CAP,CER,X5R,10UF,20%,10V,0402,H=0.65MM
138S0692	CAP,CER,X5R,1UF,20%,6.3V,0201
138S0683	CAP,CER,X5R,1UF,10%,25V,0402
138S0652	CAP,CER,X5R,4.7UF,20%,6.3V,H=0.65MM,0402
138S00070	CAP,X5R,4.7UF,20%,25V,0402
138S00014	CAP,CER,1UF,20%,16V,X5R,0201,H=0.39MM
132S0664	CAP,CER,0.047UF,10%,25V,X5R,0201
132S0663	CAP,CER,X5R,1UF,10%,25V,0402
132S0534	CAP,CER,X5R,0.1UF,10%,25V,0201
132S0436	CAP,CER,X5R,0.22UF,20%,6.3V,01005
132S0396	CAP,CER,X5R,1000PF,10%,10V,01005
132S0316	CAP,CER,X5R,0.1UF,20%,6.3V,01005
132S0304	CAP,CER,X5R,0.22UF,20%,6.3V,0201
132S0296	CAP,CER,X5R,1000PF,10%,6.3V,01005
132S0318	CAP,CER,X5R,820PF,10%,10V,01005

CRITICAL PART#	COMMENT
132S0288	CAP,CER,X5R,0.1UF,10%,16V,0201
132S0275	CAP,CER,X5R,470PF,10%,10V,01005
132S0249	CAP,CER,X7R,220PF,10%,10V,01005
132S0245	CAP,CER,X5R,0.01UF,10%,6.3V,01005
132S00093	CAP,X5R,0.022UF,20%,6.3V,01005
132S00025	CAP,CER,X5R,0.047UF,20%,6.3V,01005
132S00008	CAP,CER,0.1UF,10%,50V,X7R,0402
131S0883	CAP,CER,NP0/C0G,220PF,2%,50V,0201
131S0804	CAP,CER,27PF,5%,C0G,25V,0201
131S0307	CAP,CER,NP0/C0G,100PF,5%,16V,01005
131S0225	CAP,CER,NP0/C0G,15PF,5%,16V,01005
131S0223	CAP,CER,NP0/C0G,27PF,5%,16V,01005
131S0220	CAP,CER,NP0/C0G,12PF,5%,16V,01005
131S0216	CAP,CER,NP0/C0G,47PF,5%,16V,01005
131S00053	CAP,CER,C0G,220PF,5%,10V,01005
118S00068	RES,MF,1.3 MOHM,1%,200PPM,1/20W,0201
117S0055	RES,MF,1/20W,2M OHM,5,0201,SMD
107S0257	THERMISTOR,NTC,10K OHM,1%,B=3435,01005

Soft-Term Cap Sub BOMs

PART#	QTY	DESCRIPTION	REFERENCE DESIGNATOR(S)	CRITICAL	BOM OPTION
685-00155	1	SUBBOM,MLB,TOP,CAP,TYPICAL,X891	SUBBOM_CAP	CRITICAL	COMMON

Agnes Input

PART#	QTY	DESCRIPTION	REFERENCE DESIGNATOR(S)	CRITICAL	BOM OPTION
138S00159	4	CAP,SOFT-TERM,2.2UF,6.3V,0201,KYOCERA	C2970,C2971,C2980,C2981	CRITICAL	SOFT_CAP
138S0831	4	CAP,TYPICAL,2.2UF,6.3V,0201,MURATA	C2970,C2971,C2980,C2981	CRITICAL	TYPICAL_CAP

Agnes Output

PART#	QTY	DESCRIPTION	REFERENCE DESIGNATOR(S)	CRITICAL	BOM OPTION
138S00159	9	CAP,SOFT-TERM,2.2UF,6.3V,0201,KYOCERA	C2900,C2901,C2903,C2906,C2907,C2910,C2911,C2913,C2914	CRITICAL	SOFT_CAP
138S0831	9	CAP,TYPICAL,2.2UF,6.3V,0201,MURATA	C2900,C2901,C2903,C2906,C2907,C2910,C2911,C2913,C2914	CRITICAL	TYPICAL_CAP

Sensors

PART#	QTY	DESCRIPTION	REFERENCE DESIGNATOR(S)	CRITICAL	BOM OPTION
138S00159	2	CAP,SOFT-TERM,2.2UF,6.3V,0201,KYOCERA	C3602,C3622	CRITICAL	SOFT_CAP
138S0831	2	CAP,TYPICAL,2.2UF,6.3V,0201,MURATA	C3602,C3622	CRITICAL	TYPICAL_CAP

RCAM B2Bs

PART#	QTY	DESCRIPTION	REFERENCE DESIGNATOR(S)	CRITICAL	BOM OPTION
138S00159	3	CAP,SOFT-TERM,2.2UF,6.3V,0201,KYOCERA	C3909,C3925,C4025	CRITICAL	SOFT_CAP
138S0831	3	CAP,TYPICAL,2.2UF,6.3V,0201,MURATA	C3909,C3925,C4025	CRITICAL	TYPICAL_CAP

Strobe B2B

PART#	QTY	DESCRIPTION	REFERENCE DESIGNATOR(S)	CRITICAL	BOM OPTION
138S00159	1	CAP,SOFT-TERM,2.2UF,6.3V,0201,KYOCERA	C4303	CRITICAL	SOFT_CAP
138S0831	1	CAP,TYPICAL,2.2UF,6.3V,0201,MURATA	C4303	CRITICAL	TYPICAL_CAP

Audio

PART#	QTY	DESCRIPTION	REFERENCE DESIGNATOR(S)	CRITICAL	BOM OPTION
138S00159	2	CAP,SOFT-TERM,2.2UF,6.3V,0201,KYOCERA	C4809,C4805	CRITICAL	SOFT_CAP
138S0831	2	CAP,TYPICAL,2.2UF,6.3V,0201,MURATA	C4809,C4805	CRITICAL	TYPICAL_CAP

Pearl B2B

PART#	QTY	DESCRIPTION	REFERENCE DESIGNATOR(S)	CRITICAL	BOM OPTION
138S00159	1	CAP,SOFT-TERM,2.2UF,6.3V,0201,KYOCERA	C4613	CRITICAL	SOFT_CAP
138S0831	1	CAP,TYPICAL,2.2UF,6.3V,0201,MURATA	C4613	CRITICAL	TYPICAL_CAP

Acorn

PART#	QTY	DESCRIPTION	REFERENCE DESIGNATOR(S)	CRITICAL	BOM OPTION
138S00160	2	CAP,SOFT-TERM,10UF,10V,0402,MURATA	C5641,C5653	CRITICAL	SOFT_CAP
138S0979	2	CAP,TYPICAL,10UF,10V,0402,MUR/KYO	C5641,C5653	CRITICAL	TYPICAL_CAP

CODEC

PART#	QTY	DESCRIPTION	REFERENCE DESIGNATOR(S)	CRITICAL	BOM OPTION
138S00160	2	CAP,SOFT-TERM,10UF,10V,0402,MURATA	C4811,C4808	CRITICAL	SOFT_CAP
138S0979	2	CAP,TYPICAL,10UF,10V,0402,MUR/KYO	C4811,C4808	CRITICAL	TYPICAL_CAP

Ansel

PART#	QTY	DESCRIPTION	REFERENCE DESIGNATOR(S)	CRITICAL	BOM OPTION
138S00160	1	CAP,SOFT-TERM,10UF,10V,0402,MURATA	C3710	CRITICAL	SOFT_CAP
138S0979	1	CAP,TYPICAL,10UF,10V,0402,MUR/KYO	C3710	CRITICAL	TYPICAL_CAP

PART NUMBER	ALTERNATE FOR PART NUMBER	BOM OPTION	REF DES	COMMENTS:
685-00156	685-00155	BOM_TABLE_ALTS	SUBBOM_CAP	SUBBOM,MLB,TOP,CAP,SOFT,X891

SYNC_MASTER=test_mlb SYNC_DATE=10/13/2016

PAGE TITLE
SYSTEM:BOM Tables

Apple Inc.

DRAWING NUMBER 051-02221
SIZE D
REVISION 9.0.0
BRANCH evt-1
PAGE 2 OF 80
SHEET 2 OF 51

NOTICE OF PROPRIETARY PROPERTY:

THE INFORMATION CONTAINED HEREIN IS THE PROPRIETARY PROPERTY OF APPLE INC.
THE POSESSOR AGREES TO THE FOLLOWING:
I TO MAINTAIN THIS DOCUMENT IN CONFIDENCE
II NOT TO REPRODUCE OR COPY IT
III NOT TO REVEAL OR PUBLISH IT IN WHOLE OR PART
IV ALL RIGHTS RESERVED

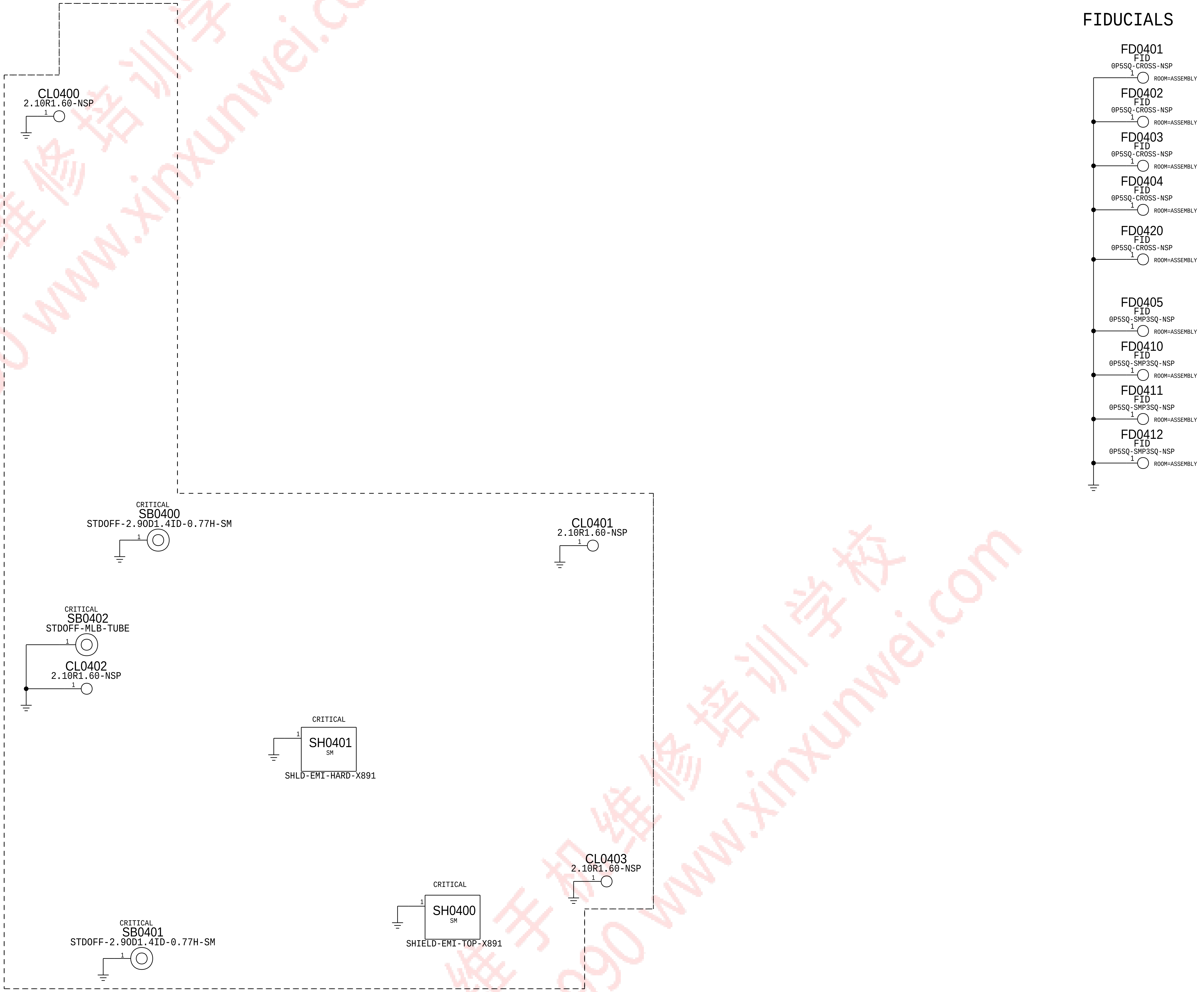
FIDUCIALS
FD0401
FID
0P5SQ-CROSS-NSP
1
ROOM=ASSEMBLY
FD0402
FID
0P5SQ-CROSS-NSP
1
ROOM=ASSEMBLY
FD0403
FID
0P5SQ-CROSS-NSP
1
ROOM=ASSEMBLY
FD0404
FID
0P5SQ-CROSS-NSP
1
ROOM=ASSEMBLY
FD0420
FID
0P5SQ-CROSS-NSP
1
ROOM=ASSEMBLY
FD0405
FID
0P5SQ-SMP3SQ-NSP
1
ROOM=ASSEMBLY
FD0410
FID
0P5SQ-SMP3SQ-NSP
1
ROOM=ASSEMBLY
FD0411
FID
0P5SQ-SMP3SQ-NSP
1
ROOM=ASSEMBLY
FD0412
FID
0P5SQ-SMP3SQ-NSP
1
ROOM=ASSEMBLY
CL0400
2.10R1.60-NSP
1
CRITICAL
SB0400
STDOFF-2.90D1.4ID-0.77H-SM
1
CL0401
2.10R1.60-NSP
1
CRITICAL
SB0402
STDOFF-MLB-TUBE
1
CL0402
2.10R1.60-NSP
1
CRITICAL
SH0401
SM
1
SHLD-EMI-HARD-X891
CL0403
2.10R1.60-NSP
1
CRITICAL
SH0400
SM
1
SHIELD-EMI-TOP-X891
CRITICAL
SB0401
STDOFF-2.90D1.4ID-0.77H-SM
1

PAGE TITLE
SYSTEM: Mechanical Components

Apple Inc.

DRAWING NUMBER 051-02221
SIZE D
REVISION 9.0.0
BRANCH evt-1
PAGE 4 OF 80
SHEET 3 OF 51

NOTICE OF PROPRIETARY PROPERTY:

THE INFORMATION CONTAINED HEREIN IS THE PROPRIETARY PROPERTY OF APPLE INC.
THE POSESSOR AGREES TO THE FOLLOWING:

I TO MAINTAIN THIS DOCUMENT IN CONFIDENCE
II NOT TO REPRODUCE OR COPY IT
III NOT TO REVEAL OR PUBLISH IT IN WHOLE OR PART
IV ALL RIGHTS RESERVED

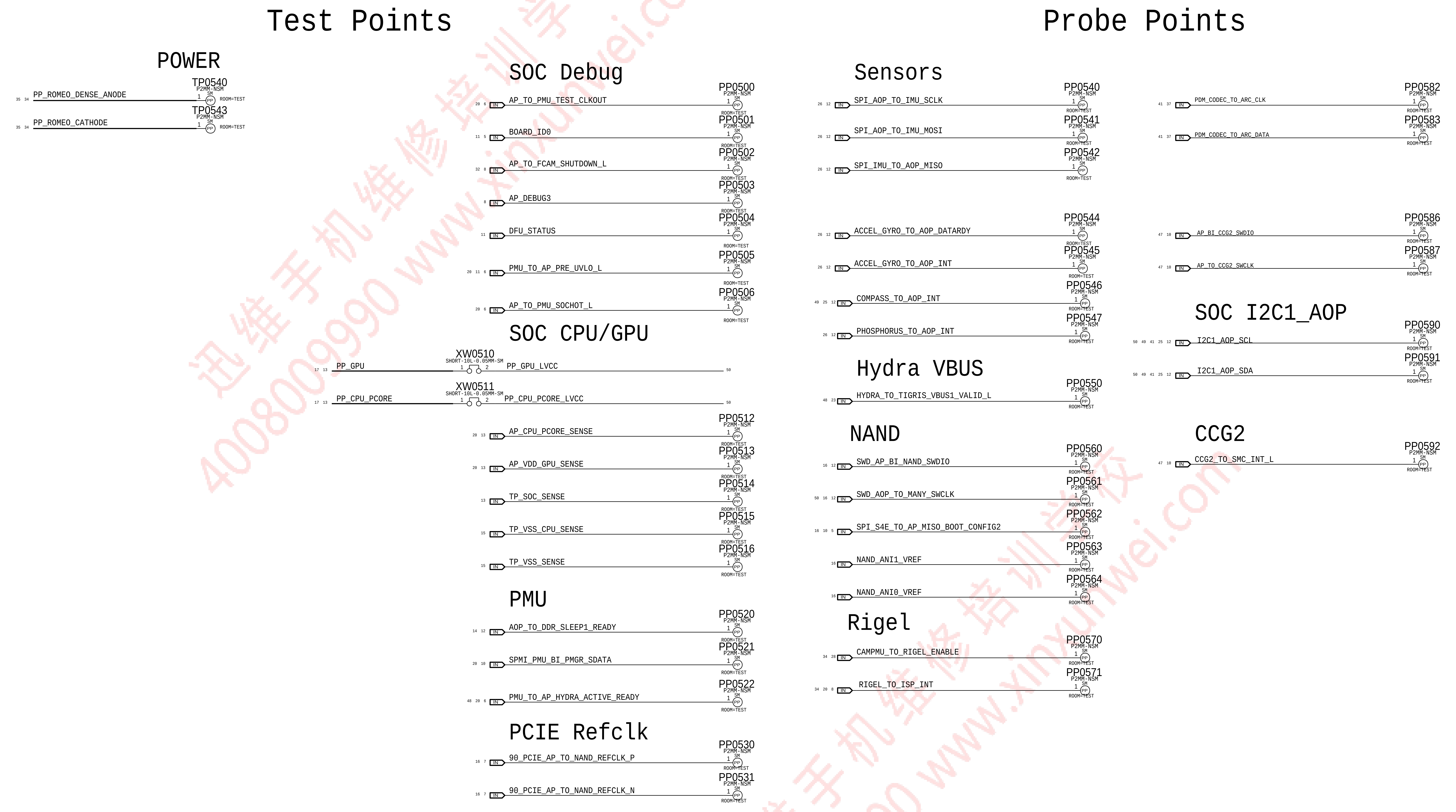
Test Points
POWER
TP0540
P2MM-NSM
SM
1
PP
ROOM=TEST
35 34 PP_ROMEO_DENSE_ANODE
TP0543
P2MM-NSM
SM
1
PP
ROOM=TEST
35 34 PP_ROMEO_CATHODE
SOC Debug
20 6 IN AP_TO_PMU_TEST_CLKOUT PP0500 P2MM-NSM SM 1 PP ROOM=TEST
11 5 IN BOARD_ID0 PP0501 P2MM-NSM SM 1 PP ROOM=TEST
32 8 IN AP_TO_FCAM_SHUTDOWN_L PP0502 P2MM-NSM SM 1 PP ROOM=TEST
8 IN AP_DEBUG3 PP0503 P2MM-NSM SM 1 PP ROOM=TEST
11 IN DFU_STATUS PP0504 P2MM-NSM SM 1 PP ROOM=TEST
20 11 6 IN PMU_TO_AP_PRE_UVLO_L PP0505 P2MM-NSM SM 1 PP ROOM=TEST
20 6 IN AP_TO_PMU_SOCHOT_L PP0506 P2MM-NSM SM 1 PP ROOM=TEST
SOC CPU/GPU
17 13 PP_GPU XW0510 SHORT-10L-0.05MM-SM 1 2 PP_GPU_LVCC 50
17 13 PP_CPU_PCORE XW0511 SHORT-10L-0.05MM-SM 1 2 PP_CPU_PCORE_LVCC 50
20 13 IN AP_CPU_PCORE_SENSE PP0512 P2MM-NSM SM 1 PP ROOM=TEST
20 13 IN AP_VDD_GPU_SENSE PP0513 P2MM-NSM SM 1 PP ROOM=TEST
13 IN TP_SOC_SENSE PP0514 P2MM-NSM SM 1 PP ROOM=TEST
15 IN TP_VSS_CPU_SENSE PP0515 P2MM-NSM SM 1 PP ROOM=TEST
15 IN TP_VSS_SENSE PP0516 P2MM-NSM SM 1 PP ROOM=TEST
PMU
14 12 IN AOP_TO_DDR_SLEEP1_READY PP0520 P2MM-NSM SM 1 PP ROOM=TEST
20 10 IN SPMI_PMU_BI_PMGR_SDATA PP0521 P2MM-NSM SM 1 PP ROOM=TEST
48 20 6 IN PMU_TO_AP_HYDRA_ACTIVE_READY PP0522 P2MM-NSM SM 1 PP ROOM=TEST
PCIE Refclk
16 7 IN 90_PCIE_AP_TO_NAND_REFCLK_P PP0530 P2MM-NSM SM 1 PP ROOM=TEST
16 7 IN 90_PCIE_AP_TO_NAND_REFCLK_N PP0531 P2MM-NSM SM 1 PP ROOM=TEST
Probe Points
Sensors
26 12 IN SPI_AOP_TO_IMU_SCLK PP0540 P2MM-NSM SM 1 PP ROOM=TEST
26 12 IN SPI_AOP_TO_IMU_MOSI PP0541 P2MM-NSM SM 1 PP ROOM=TEST
26 12 IN SPI_IMU_TO_AOP_MISO PP0542 P2MM-NSM SM 1 PP ROOM=TEST
26 12 IN ACCEL_GYRO_TO_AOP_DATARDY PP0544 P2MM-NSM SM 1 PP ROOM=TEST
26 12 IN ACCEL_GYRO_TO_AOP_INT PP0545 P2MM-NSM SM 1 PP ROOM=TEST
49 25 12 IN COMPASS_TO_AOP_INT PP0546 P2MM-NSM SM 1 PP ROOM=TEST
26 12 IN PHOSPHORUS_TO_AOP_INT PP0547 P2MM-NSM SM 1 PP ROOM=TEST
Hydra VBUS
48 23 IN HYDRA_TO_TIGRIS_VBUS1_VALID_L PP0550 P2MM-NSM SM 1 PP ROOM=TEST
NAND
16 12 IN SWD_AP_BI_NAND_SWDIO PP0560 P2MM-NSM SM 1 PP ROOM=TEST
50 16 12 IN SWD_AOP_TO_MANY_SWCLK PP0561 P2MM-NSM SM 1 PP ROOM=TEST
16 10 5 IN SPI_S4E_TO_AP_MISO_BOOT_CONFIG2 PP0562 P2MM-NSM SM 1 PP ROOM=TEST
16 IN NAND_ANI1_VREF PP0563 P2MM-NSM SM 1 PP ROOM=TEST
16 IN NAND_ANI0_VREF PP0564 P2MM-NSM SM 1 PP ROOM=TEST
Rigel
34 28 IN CAMPMU_TO_RIGEL_ENABLE PP0570 P2MM-NSM SM 1 PP ROOM=TEST
34 20 8 IN RIGEL_TO_ISP_INT PP0571 P2MM-NSM SM 1 PP ROOM=TEST
41 37 IN PDM_CODEC_TO_ARC_CLK PP0582 P2MM-NSM SM 1 PP ROOM=TEST
41 37 IN PDM_CODEC_TO_ARC_DATA PP0583 P2MM-NSM SM 1 PP ROOM=TEST
47 10 IN AP_BI_CCG2_SWDIO PP0586 P2MM-NSM SM 1 PP ROOM=TEST
47 10 IN AP_TO_CCG2_SWCLK PP0587 P2MM-NSM SM 1 PP ROOM=TEST
SOC I2C1_AOP
50 49 41 25 12 IN I2C1_AOP_SCL PP0590 P2MM-NSM SM 1 PP ROOM=TEST
50 49 41 25 12 IN I2C1_AOP_SDA PP0591 P2MM-NSM SM 1 PP ROOM=TEST
CCG2
47 10 IN CCG2_TO_SMC_INT_L PP0592 P2MM-NSM SM 1 PP ROOM=TEST

SYNC_MASTER=test_mlb
SYNC_DATE=10/13/2016

PAGE TITLE
SYSTEM: Testpoints (Top)

Apple Inc.

DRAWING NUMBER 051-02221	SIZE D
REVISION [illegible]	
BRANCH evt-1	
PAGE 5 OF 80	
SHEET 4 OF 51	

NOTICE OF PROPRIETARY PROPERTY:

THE INFORMATION CONTAINED HEREIN IS THE PROPRIETARY PROPERTY OF APPLE INC.
THE POSESSOR AGREES TO THE FOLLOWING:
I TO MAINTAIN THIS DOCUMENT IN CONFIDENCE
II NOT TO REPRODUCE OR COPY IT
III NOT TO REVEAL OR PUBLISH IT IN WHOLE OR PART
IV ALL RIGHTS RESERVED

BOOTSTRAPPING:BOARD REV
BOARD ID
BOOT CONFIG

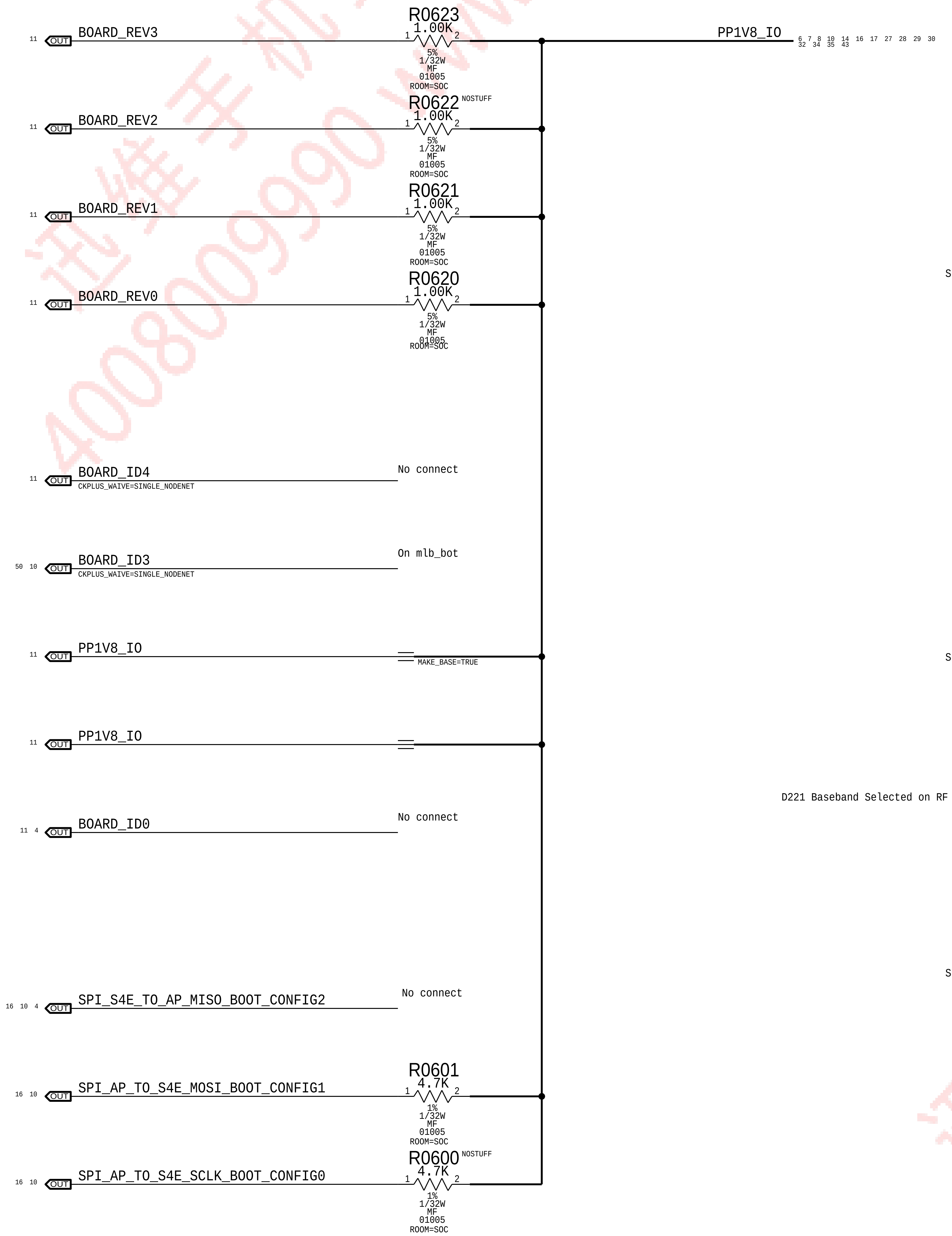
11 OUT BOARD_REV3
R0623
1.00K
1 2
5%
1/32W
MF
01005
ROOM=SOC
PP1V8_IO
6 7 8 10 14 16 17 27 28 29 30
32 34 35 43
11 OUT BOARD_REV2
R0622 NOSTUFF
1.00K
5%
1/32W
MF
01005
ROOM=SOC
11 OUT BOARD_REV1
R0621
1.00K
5%
1/32W
MF
01005
ROOM=SOC
11 OUT BOARD_REV0
R0620
1.00K
5%
1/32W
MF
01005
ROOM=SOC
11 OUT BOARD_ID4
CKPLUS_WAIVE=SINGLE_NODENET
No connect
50 10 OUT BOARD_ID3
CKPLUS_WAIVE=SINGLE_NODENET
On mlb_bot
11 OUT PP1V8_IO
MAKE_BASE=TRUE
11 OUT PP1V8_IO
11 4 OUT BOARD_ID0
No connect
16 10 4 OUT SPI_S4E_TO_AP_MISO_BOOT_CONFIG2
No connect
16 10 OUT SPI_AP_TO_S4E_MOSI_BOOT_CONFIG1
R0601
4.7K
1%
1/32W
MF
01005
ROOM=SOC
16 10 OUT SPI_AP_TO_S4E_SCLK_BOOT_CONFIG0
R0600 NOSTUFF
4.7K
1%
1/32W
MF
01005
ROOM=SOC

SELECTED --> EVT

Board Rev[3:0] Float=Low I PU=High	3	2	1	0
	Build Major		Build Minor	
Proto 1	1	1	1	1
Proto 1 (DOE6)	1	1	1	0
Proto 2	1	1	0	1
Proto 3	1	1	0	0
EVT	1	0	1	1
(Spare)	1	0	1	0
Carrier	0	1	1	1
(Spare)	0	1	1	0
DVT	0	0	1	1
(Spare)	0	0	1	0
(Spare)	0	0	0	1
PVT	0	0	0	0

SELECTED --> D22 MLB

D221 Baseband Selected on RF Board

Board ID[4:0] Float=Low I PU=High	4	3	2	1	0
	X	Baseband	Form Factor		MLB/Dev
D20 MLB	0	0	0	1	0
D20 Dev	0	0	0	1	1
D21 MLB	0	0	1	0	0
D21 Dev	0	0	1	0	1
D22 MLB	0	0	1	1	0
D22 Dev	0	0	1	1	1
D201 MLB	0	1	0	1	0
D201 Dev	0	1	0	1	1
D211 MLB	0	1	1	0	0
D211 Dev	0	1	1	0	1
D221 MLB	0	1	1	1	0
D221 Dev	0	1	1	1	1

SELECTED --> SPI0 NAND

Boot Config[2:0] Float=Low I PU=High	2	1	0
SPI0	0	0	0
SPI0 Test Mode	0	0	1
SPI0 NAND	0	1	0
SPI0 NAND Test	0	1	1
Slow SPI0 Test	1	1	0

SYNC_MASTER=test_mlb
SYNC_DATE=10/13/2016

PAGE TITLE
BOOTSTRAPPING

DRAWING NUMBER 051-02221
SIZE D
REVISION 9.0.0
BRANCH evt-1
PAGE 6 OF 80
SHEET 5 OF 51

Apple Inc.

NOTICE OF PROPRIETARY PROPERTY:

THE INFORMATION CONTAINED HEREIN IS THE PROPRIETARY PROPERTY OF APPLE INC.
THE POSESSOR AGREES TO THE FOLLOWING:
I TO MAINTAIN THIS DOCUMENT IN CONFIDENCE
II NOT TO REPRODUCE OR COPY IT
III NOT TO REVEAL OR PUBLISH IT IN WHOLE OR PART
IV ALL RIGHTS RESERVED

SOC - USB, JTAG, XTAL

VDD11_XTAL:1.06-1.17V @ 2mA MAX
VDD18_USB: 1.62V - 1.98V @ 20mA MAX
PP1V8_IO 5 7 8 10 14 16 17 27 28 29 30 32 34 35 43
C1090 0.1UF 20% 6.3V X5R-CERM 01005 ROOM=SOC
FL1092 240-OHM-25%-0.20A-0.9DCR 01005 ROOM=SOC
PP1V8_XTAL
C1092 0.1UF 20% 6.3V X5R-CERM 01005 ROOM=SOC
C1093 4UF 20% 6.3V CER-X5R 0201 ROOM=SOC
3.14-3.46V @ 12mA MAX
PP3V3_USB 19
C1095 0.1UF 20% 6.3V X5R-CERM 01005 ROOM=SOC
(Analog)
0.765V - 0.84V @ 5mA MAX
PP0V8_SOC_FIXED_S1 7 8 9 13 14 17
USB Reference
AP_USB_REXT 6
R1000 200 1% 1/32W MF 01005 ROOM=SOC
AT7 AP14 AU28 AN14 AN15
VDD12_UH1_HSIC0 VDD18_USB VDD18_XTAL VDD33_USB VDD_FIXED_USB
OMIT_TABLE
U1000
TMIT78B0-C4
WLCSP
SYM 1 OF 16
ROOM=SOC
CRITICAL
NC BA4 UH1_HSIC0_DATA
NC AY4 UH1_HSIC0_STB
MAKE_BASE=TRUE GND AT8 JTAG_SEL
NC AV6 JTAG_TRST*
NC AT9 JTAG_TDO
NC AT12 JTAG_TDI
48 BI SWD_DOCK_BI_AP_SWDIO AT10 JTAG_TMS
48 IN SWD_DOCK_TO_AP_SWCLK AT13 JTAG_TCK
R1020 10K 5% 1/32W MF 01005
PMU_TO_SYSTEM_COLD_RESET_R_L AU7 COLD_RESET*
48 20 4 IN PMU_TO_AP_HYDRA_ACTIVE_READY AT34 CFSB
AV5 CFSB_AON
20 IN PMU_TO_SYSTEM_COLD_RESET_L
20 4 OUT AP_TO_PMU_TEST_CLKOUT V2 TST_CLKOUT
16 OUT AP_TO_NAND_RESET_L AF34 SSD_RESET*
16 OUT AP_TO_NAND_FW_STRAP AG38 SSD_BFH
MAKE_BASE=TRUE GND W5 HOLD_RESET
GND W4 TESTMODE
ANALOGMUX_OUT AT27 AP_TO_PMU_AMUX_OUT OUT 20
USB_DP AY6 90_USB_AP_DATA_P BI 48
USB_DM BA6 90_USB_AP_DATA_N BI 48
USB_VBUS AV7 USB_VBUS_DETECT IN 23
USB_ID AW6 NC
USB_REXT AU8 AP_USB_REXT 6
CPU_TRIGGER0 AT22 PMU_TO_AP_THROTTLE_PCORE_L IN 20
CPU_TRIGGER1 AW21 PMU_TO_AP_THROTTLE_ECORE_L IN 20
GPU_TRIGGER0 AD2 PMU_TO_AP_THROTTLE_GPU0_L IN 20
GPU_TRIGGER1 AD3 PMU_TO_AP_THROTTLE_GPU1_L IN 20
SOCHOT1 A30 AP_TO_PMU_SOCHOT_L OUT 4 20
DROOP B31 PMU_TO_AP_PRE_UVLO_L IN 4 11 20
WDOG AW5 AP_TO_PMU_WDOG_RESET OUT 20
XI0 BA28 XTAL_AP_24M_IN
XO0 BA27 XTAL_AP_24M_OUT
NOSTUFF
R1010 511K 1% 1/32W MF 01005 ROOM=SOC
R1011 1.00K 5% 1/32W MF 01005 ROOM=SOC
SOC_24M_O
ROOM=SOC
Y1000 1.60X1.20MM-SM
24.000MHZ-30PPM-9.5PF-60OHM
C1010 12PF 5% 16V CERM 01005 ROOM=SOC
C1011 12PF 5% 16V CERM 01005 ROOM=SOC

SYNC_MASTER=test_mlb SYNC_DATE=10/17/2016

PAGE TITLE
SOC: JTAG,USB,XTAL

Apple Inc.

DRAWING NUMBER 051-02221
SIZE D
REVISION 9.0.0
BRANCH evt-1
PAGE 10 OF 80
SHEET 6 OF 51

NOTICE OF PROPRIETARY PROPERTY:

THE INFORMATION CONTAINED HEREIN IS THE PROPRIETARY PROPERTY OF APPLE INC.
THE POSESSOR AGREES TO THE FOLLOWING:
I TO MAINTAIN THIS DOCUMENT IN CONFIDENCE
II NOT TO REPRODUCE OR COPY IT
III NOT TO REVEAL OR PUBLISH IT IN WHOLE OR PART
IV ALL RIGHTS RESERVED

SOC - PCIE INTERFACES

PCIe BB CLKREQ PU on BB domain
PCIe Clock Request Pull-Ups
PP1V8_IO
R1100 100K 5% 1/32W MF 01005 ROOM=SOC
R1130 100K 5% 1/32W MF 01005 ROOM=SOC
PCIE_NAND_BI_AP_CLKREQ_L
PCIE_WLAN_BI_AP_CLKREQ_L
PCIe Reset Pull-Downs
PCIE_AP_TO_WLAN_RESET_L
PCIE_AP_TO_BB_RESET_L
PCIE_AP_TO_NAND_RESET_L
R1101 100K 5% 1/32W MF 01005 ROOM=SOC
R1121 100K 5% 1/32W MF 01005 ROOM=SOC
R1131 100K 5% 1/32W MF 01005 ROOM=SOC
PP1V2_SOC
R1198 0.00 0% 1/32W MF 01005 ROOM=SOC
(Analog)
VDD12_PCIE_REFBUF:1.08V - 1.26V @ 30mA MAX
PP1V2_SOC_PCIE_REFBUF
C1198 0.1UF 20% 6.3V X5R-CERM 01005 ROOM=SOC
1.62V - 1.98V @ 81mA MAX
PP1V8_IO
C1199 4UF 20% 6.3V CER-X5R 0201 ROOM=SOC
(Analog)
VDD_FIXED_PCIE_REFBUF:0.765V - 0.84V @ 9mA MAX
VDD_FIXED_PCIE_ANA:0.765V - 0.84V @ 131mA MAX
PP0V8_SOC_FIXED_S1
PP0V8_SOC_FIXED_PCIE_REFBUF
R1194 0.00 0% 1/32W MF 01005 ROOM=SOC
C1193 0.1UF 20% 6.3V X5R-CERM 01005 ROOM=SOC
C1192 1.0UF 20% 6.3V X5R 0201-1 ROOM=SOC
C1191 4UF 20% 6.3V CER-X5R 0201 ROOM=SOC
C1194 0.1UF 20% 6.3V X5R-CERM 01005 ROOM=SOC
AN26 AP26 VDD12_PCIE_REFBUF
AM29 AM31 VDD18_PCIE
AN30 AP29 AP31 VDD_FIXED_PCIE_ANA
AM27 AP27 VDD_FIXED_PCIE_REFBUF
ROOM=SOC
U1000
TMIT78B0-C4
WLCSP
SYM 2 OF 16
AL38 PCIE_CLKREQ0*
AW27 PCIE_REF_CLK0_P
AV27 PCIE_REF_CLK0_N
AW29 PCIE_RX0_P
AW29 PCIE_RX0_N
AY30 PCIE_TX0_P
BA30 PCIE_TX0_N
AJ37 PCIE_PERST0*
LINK0
LINK3
AL37 PCIE_CLKREQ1*
AW26 PCIE_REF_CLK1_P
AY26 PCIE_REF_CLK1_N
AV31 PCIE_RX1_P
AW31 PCIE_RX1_N
AY32 PCIE_TX1_P
BA32 PCIE_TX1_N
AK38 PCIE_PERST1*
LINK1
LINK2
NC
AU30 PCIE_EXT_REF_CLK_P
AT30 PCIE_EXT_REF_CLK_N
PCIE_CLKREQ3* AJ36
PCIE_REF_CLK3_P AY24
PCIE_REF_CLK3_N BA24
PCIE_RX3_P BA36
PCIE_RX3_N AY36
PCIE_TX3_P AV35
PCIE_TX3_N AW35
PCIE_PERST3* AH36
PCIE_CLKREQ2* AK37
PCIE_REF_CLK2_P AV25
PCIE_REF_CLK2_N AW25
PCIE_RX2_P BA34
PCIE_RX2_N AY34
PCIE_TX2_P AV33
PCIE_TX2_N AW33
PCIE_PERST2* AJ38
PCIE_REXT AU32
AP_PCIE_RCAL
R1150 200 1% 1/32W MF 01005 ROOM=SOC
PCIE LINK 0
PCIE_NAND_BI_AP_CLKREQ_L
90_PCIE_AP_TO_NAND_REFCLK_P
90_PCIE_AP_TO_NAND_REFCLK_N
90_PCIE_NAND_TO_AP_RXD_P
90_PCIE_NAND_TO_AP_RXD_N
C1100 0.22UF 20% 6.3V X5R 01005 ROOM=SOC GND_VOID
C1101 0.22UF 20% 6.3V X5R 01005 ROOM=SOC GND_VOID
90_PCIE_NAND_TO_AP_RXD_C_P
90_PCIE_NAND_TO_AP_RXD_C_N
90_PCIE_AP_TO_NAND_TXD_P
90_PCIE_AP_TO_NAND_TXD_N
C1102 0.22UF 20% 6.3V X5R 01005 ROOM=SOC GND_VOID
C1103 0.22UF 20% 6.3V X5R 01005 ROOM=SOC GND_VOID
90_PCIE_AP_TO_NAND_TXD_C_P
90_PCIE_AP_TO_NAND_TXD_C_N
PCIE_AP_TO_NAND_RESET_L
IN
OUT
BI
PCIE LINK 3
PCIE_WLAN_BI_AP_CLKREQ_L
90_PCIE_AP_TO_WLAN_REFCLK_P
90_PCIE_AP_TO_WLAN_REFCLK_N
90_PCIE_WLAN_TO_AP_RXD_C_P
90_PCIE_WLAN_TO_AP_RXD_C_N
C1130 0.1UF 20% 6.3V X5R-CERM 01005 ROOM=SOC GND_VOID
C1131 0.1UF 20% 6.3V X5R-CERM 01005 ROOM=SOC GND_VOID
90_PCIE_WLAN_TO_AP_RXD_P
90_PCIE_WLAN_TO_AP_RXD_N
90_PCIE_AP_TO_WLAN_TXD_C_P
90_PCIE_AP_TO_WLAN_TXD_C_N
C1132 0.1UF 20% 6.3V X5R-CERM 01005 ROOM=SOC GND_VOID
C1133 0.1UF 20% 6.3V X5R-CERM 01005 ROOM=SOC GND_VOID
90_PCIE_AP_TO_WLAN_TXD_P
90_PCIE_AP_TO_WLAN_TXD_N
PCIE_AP_TO_WLAN_RESET_L
PCIE LINK 2
90_PCIE_AP_TO_BB_REFCLK_P
90_PCIE_AP_TO_BB_REFCLK_N
C1124 4.7PF +/-0.1PF 16V NP0-C0G 01005 ROOM=SOC
C1125 4.7PF +/-0.1PF 16V NP0-C0G 01005 ROOM=SOC
PCIE_BB_BI_AP_CLKREQ_L
90_PCIE_BB_TO_AP_RXD_C_P
90_PCIE_BB_TO_AP_RXD_C_N
C1120 0.1UF 20% 6.3V X5R-CERM 01005 ROOM=SOC GND_VOID
C1121 0.1UF 20% 6.3V X5R-CERM 01005 ROOM=SOC GND_VOID
90_PCIE_BB_TO_AP_RXD_P
90_PCIE_BB_TO_AP_RXD_N
90_PCIE_AP_TO_BB_TXD_C_P
90_PCIE_AP_TO_BB_TXD_C_N
C1122 0.1UF 20% 6.3V X5R-CERM 01005 ROOM=SOC GND_VOID
C1123 0.1UF 20% 6.3V X5R-CERM 01005 ROOM=SOC GND_VOID
90_PCIE_AP_TO_BB_TXD_P
90_PCIE_AP_TO_BB_TXD_N
PCIE_AP_TO_BB_RESET_L

SYNC_MASTER=test_mlb SYNC_DATE=10/17/2016

PAGE TITLE
SOC: PCIE

Apple Inc.

DRAWING NUMBER 051-02221
SIZE D
REVISION
BRANCH evt-1
PAGE 11 OF 80
SHEET 7 OF 51

NOTICE OF PROPRIETARY PROPERTY:

THE INFORMATION CONTAINED HEREIN IS THE PROPRIETARY PROPERTY OF APPLE INC.
THE POSESSOR AGREES TO THE FOLLOWING:
I TO MAINTAIN THIS DOCUMENT IN CONFIDENCE
II NOT TO REPRODUCE OR COPY IT
III NOT TO REVEAL OR PUBLISH IT IN WHOLE OR PART
IV ALL RIGHTS RESERVED

迅维职业技能培训中心
400-800-9990

SOC - MIPI & ISP INTERFACES

MIPI Lane & Polarity Swapping

Program	Function	SOC LANE	DISTAL LANE	Lane Swap	Polarity Swap
X891	Display	Clock_P	Clock_N	☐	☑
		Clock_N	Clock_P	☐	☑
		Lane_0_P	Lane_0_N	☐	☐
		Lane_0_N	Lane_0_P	☐	☐
		Lane_1_P	Lane_1_P	☐	☐
		Lane_1_N	Lane_1_N	☐	☐
		Lane_2_P	Lane_3_P	☑	☐
		Lane_2_N	Lane_3_N	☑	☐
		Lane_3_P	Lane_2_N	☑	☑
		Lane_3_N	Lane_2_P	☑	☑
	FCAM	Clock_P	Clock_P	☐	☐
		Clock_N	Clock_N	☐	☐
		Lane_0_P	Lane_0_N	☐	☑
		Lane_0_N	Lane_0_P	☐	☑
		Lane_1_P	Lane_1_N	☐	☑
		Lane_1_N	Lane_1_P	☐	☑
	JULIET	Clock_P	Clock_N	☐	☑
		Clock_N	Clock_P	☐	☑
		Lane_0_P	Lane_0_P	☐	☐
		Lane_0_N	Lane_0_N	☐	☐
		Lane_1_P	Lane_1_P	☐	☐
		Lane_1_N	Lane_1_N	☐	☐

(Analog)
0.765V - 0.84V @ 40mA MAX
PP0V8_SOC_FIXED_S1
C1290 0.1UF 20% 6.3V X5R-CERM 01005 ROOM=SOC
C1291 2.2UF 20% 6.3V X5R-CERM 0201 ROOM=SOC
1.62V - 1.98V @ 10mA MAX
PP1V8_IO
C1295 2.2UF 20% 6.3V X5R-CERM 0201 ROOM=SOC
C1296 0.1UF 20% 6.3V X5R-CERM 01005 ROOM=SOC
G12 G14 VDD_FIXED_MIPI
F11 F13 VDD18_MIPI
U1000
TMIT78B0-C4
WLCSP
SYM 3 OF 16
ROOM=SOC
Juliet MIPI
90_MIPI_JULIET_TO_AP_DATA0_P B12 MIPI0C_DPDATA0
90_MIPI_JULIET_TO_AP_DATA0_N A12 MIPI0C_DNDATA0
90_MIPI_JULIET_TO_AP_DATA1_P B14 MIPI0C_DPDATA1
90_MIPI_JULIET_TO_AP_DATA1_N A14 MIPI0C_DNDATA1
90_MIPI_JULIET_TO_AP_CLK_N A13 MIPI0C_DPCLK
90_MIPI_JULIET_TO_AP_CLK_P B13 MIPI0C_DNCLK
MIPI0C_REXT D12 MIPI0C_REXT
MIPI1C_REXT D13 MIPI1C_REXT
FCAM MIPI
90_MIPI_FCAM_TO_AP_DATA0_N B17 MIPI1C_DPDATA0
90_MIPI_FCAM_TO_AP_DATA0_P A17 MIPI1C_DNDATA0
90_MIPI_FCAM_TO_AP_DATA1_N B15 MIPI1C_DPDATA1
90_MIPI_FCAM_TO_AP_DATA1_P A15 MIPI1C_DNDATA1
90_MIPI_FCAM_TO_AP_CLK_P A16 MIPI1C_DPCLK
90_MIPI_FCAM_TO_AP_CLK_N B16 MIPI1C_DNCLK
Display MIPI
90_MIPI_AP_TO_DISPLAY_DATA0_P A10 MIPID_DPDATA0
90_MIPI_AP_TO_DISPLAY_DATA0_N B10 MIPID_DNDATA0
90_MIPI_AP_TO_DISPLAY_DATA1_P B9 MIPID_DPDATA1
90_MIPI_AP_TO_DISPLAY_DATA1_N A9 MIPID_DNDATA1
90_MIPI_AP_TO_DISPLAY_DATA3_P A7 MIPID_DPDATA2
90_MIPI_AP_TO_DISPLAY_DATA3_N B7 MIPID_DNDATA2
90_MIPI_AP_TO_DISPLAY_DATA2_N A6 MIPID_DPDATA3
90_MIPI_AP_TO_DISPLAY_DATA2_P B6 MIPID_DNDATA3
90_MIPI_AP_TO_DISPLAY_CLK_N A8 MIPID_DPCLK
90_MIPI_AP_TO_DISPLAY_CLK_P B8 MIPID_DNCLK
AP_TO_MANY_BSYNC AA3 DISP_TOUCH_BSYNC0
DISPLAY_TO_AP_ALIVE AB4 DISP_TOUCH_BSYNC1
NC AB6 DISP_TOUCH_EB
MIPID_REXT D11 MIPID_REXT
NC AA4 DISP_I2C_SCL
NC AA5 DISP_I2C_SDA
NC Y4 DISP_POL
MAKE_BASE
ISP_I2C0_SCL W35 I2C0_ISP_SCL
ISP_I2C0_SDA V38 I2C0_ISP_SDA
ISP_I2C1_SCL W36 I2C1_ISP_SCL
ISP_I2C1_SDA Y36 I2C1_ISP_SDA
ISP_I2C2_SCL Y34 I2C2_ISP_SCL
ISP_I2C2_SDA Y38 I2C2_ISP_SDA
ISP_I2C3_SCL AA37 I2C3_ISP_SCL
ISP_I2C3_SDA AB38 I2C3_ISP_SDA
SENSOR_INT AB36 RIGEL_TO_ISP_INT
SENSOR0_CLK U38 AP_TO_WIDE_CLK_R
SENSOR1_CLK R38 AP_TO_TELE_CLK_R
SENSOR2_CLK R37 AP_TO_FCAM_JULIET_RIGEL_CLK_R
SENSOR0_RST V34 AP_TO_JULIET_SHUTDOWN_L
SENSOR1_RST U35 AP_TO_TELE_SHUTDOWN_L
SENSOR2_RST AB34 AP_TO_WIDE_SHUTDOWN_L
SENSOR3_RST AC37 NC
SENSOR4_RST AA35 AP_TO_FCAM_SHUTDOWN_L
SENSOR0_ISTRB V36 AP_DEBUG3
SENSOR1_ISTRB U36 NC
SENSOR0_XSHUTDOWN U37 NC
SENSOR1_XSHUTDOWN T37 ISP_TO_DISPLAY_FLASH_INT
R1240 33.2 1% 1/32W MF 01005 ROOM=SOC AP_TO_WIDE_CLK
R1241 33.2 1% 1/32W MF 01005 ROOM=SOC AP_TO_TELE_CLK
R1242 33.2 1% 1/32W MF 01005 ROOM=SOC AP_TO_FCAM_JULIET_CLK
R1243 33.2 1% 1/32W MF 01005 ROOM=SOC AP_TO_RIGEL_CLK
ISP I2C0
PP1V8_IO
R1201 1.00K 5% 1/32W MF 01005 ROOM=SOC
R1202 1.00K 5% 1/32W MF 01005 ROOM=SOC
I2C0_ISP_SCL
I2C0_ISP_SDA
ISP I2C1
PP1V8_IO
R1211 1.00K 5% 1/32W MF 01005 ROOM=SOC
R1212 1.00K 5% 1/32W MF 01005 ROOM=SOC
I2C1_ISP_SCL
I2C1_ISP_SDA
ISP I2C2
PP1V8_IO
R1221 1.00K 5% 1/32W MF 01005 ROOM=SOC
R1222 1.00K 5% 1/32W MF 01005 ROOM=SOC
I2C2_ISP_SCL
I2C2_ISP_SDA
ISP I2C3
PP1V8_IO
R1231 1.00K 5% 1/32W MF 01005 ROOM=SOC
R1232 1.00K 5% 1/32W MF 01005 ROOM=SOC
I2C3_ISP_SCL
I2C3_ISP_SDA
MIPI Reference
MIPI0C_REXT
MIPI1C_REXT
MIPID_REXT
R1250 200 1% 1/32W MF 01005 ROOM=SOC
R1251 200 1% 1/32W MF 01005 ROOM=SOC
R1252 200 1% 1/32W MF 01005 ROOM=SOC

PAGE TITLE
SOC: MIPI & ISP

DRAWING NUMBER 051-02221
SIZE D
Apple Inc.
REVISION [illegible]
BRANCH evt-1
PAGE 12 OF 80
SHEET 8 OF 51

NOTICE OF PROPRIETARY PROPERTY:
THE INFORMATION CONTAINED HEREIN IS THE PROPRIETARY PROPERTY OF APPLE INC.
THE POSESSOR AGREES TO THE FOLLOWING:
I TO MAINTAIN THIS DOCUMENT IN CONFIDENCE
II NOT TO REPRODUCE OR COPY IT
III NOT TO REVEAL OR PUBLISH IT IN WHOLE OR PART
IV ALL RIGHTS RESERVED

SOC - LPDP

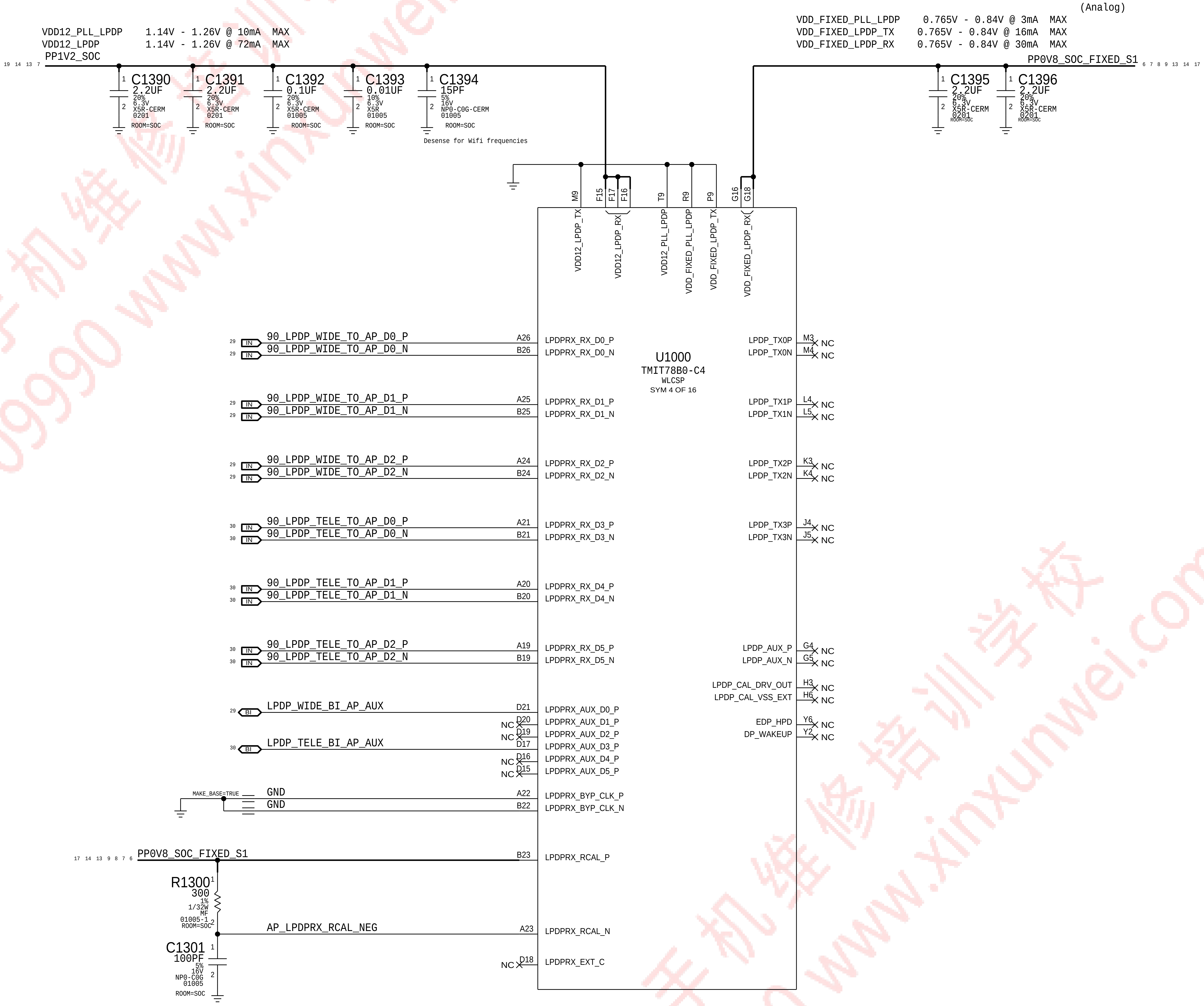
VDD12_PLL_LPDP 1.14V - 1.26V @ 10mA MAX
VDD12_LPDP 1.14V - 1.26V @ 72mA MAX
PP1V2_SOC
19 14 13 7
C1390 2.2UF 20% 6.3V X5R-CERM 0201 ROOM=SOC
C1391 2.2UF 20% 6.3V X5R-CERM 0201 ROOM=SOC
C1392 0.1UF 20% 6.3V X5R-CERM 01005 ROOM=SOC
C1393 0.01UF 10% 6.3V X5R 01005 ROOM=SOC
C1394 15PF 5% 16V NP0-C0G-CERM 01005 ROOM=SOC
Desense for Wifi frequencies
(Analog)
VDD_FIXED_PLL_LPDP 0.765V - 0.84V @ 3mA MAX
VDD_FIXED_LPDP_TX 0.765V - 0.84V @ 16mA MAX
VDD_FIXED_LPDP_RX 0.765V - 0.84V @ 30mA MAX
PP0V8_SOC_FIXED_S1
6 7 8 9 13 14 17
C1395 2.2UF 20% 6.3V X5R-CERM 0201 ROOM=SOC
C1396 2.2UF 20% 6.3V X5R-CERM 0201 ROOM=SOC
M9 F15 F17 F16 T9 R9 P9 G16 G18
VDD12_LPDP_TX
VDD12_LPDP_RX
VDD12_PLL_LPDP
VDD_FIXED_PLL_LPDP
VDD_FIXED_LPDP_TX
VDD_FIXED_LPDP_RX
U1000
TMIT78B0-C4
WLCSP
SYM 4 OF 16
29 IN 90_LPDP_WIDE_TO_AP_D0_P A26 LPDPRX_RX_D0_P
29 IN 90_LPDP_WIDE_TO_AP_D0_N B26 LPDPRX_RX_D0_N
29 IN 90_LPDP_WIDE_TO_AP_D1_P A25 LPDPRX_RX_D1_P
29 IN 90_LPDP_WIDE_TO_AP_D1_N B25 LPDPRX_RX_D1_N
29 IN 90_LPDP_WIDE_TO_AP_D2_P A24 LPDPRX_RX_D2_P
29 IN 90_LPDP_WIDE_TO_AP_D2_N B24 LPDPRX_RX_D2_N
30 IN 90_LPDP_TELE_TO_AP_D0_P A21 LPDPRX_RX_D3_P
30 IN 90_LPDP_TELE_TO_AP_D0_N B21 LPDPRX_RX_D3_N
30 IN 90_LPDP_TELE_TO_AP_D1_P A20 LPDPRX_RX_D4_P
30 IN 90_LPDP_TELE_TO_AP_D1_N B20 LPDPRX_RX_D4_N
30 IN 90_LPDP_TELE_TO_AP_D2_P A19 LPDPRX_RX_D5_P
30 IN 90_LPDP_TELE_TO_AP_D2_N B19 LPDPRX_RX_D5_N
29 BI LPDP_WIDE_BI_AP_AUX D21 LPDPRX_AUX_D0_P
NC D20 LPDPRX_AUX_D1_P
NC D19 LPDPRX_AUX_D2_P
30 BI LPDP_TELE_BI_AP_AUX D17 LPDPRX_AUX_D3_P
NC D16 LPDPRX_AUX_D4_P
NC D15 LPDPRX_AUX_D5_P
MAKE_BASE=TRUE GND A22 LPDPRX_BYP_CLK_P
GND B22 LPDPRX_BYP_CLK_N
17 14 13 9 8 7 6 PP0V8_SOC_FIXED_S1 B23 LPDPRX_RCAL_P
R1300 300 1% 1/32W MF 01005-1 ROOM=SOC
AP_LPDPRX_RCAL_NEG A23 LPDPRX_RCAL_N
C1301 100PF 5% 16V NP0-C0G 01005 ROOM=SOC
NC D18 LPDPRX_EXT_C
LPDP_TX0P M3 NC
LPDP_TX0N M4 NC
LPDP_TX1P L4 NC
LPDP_TX1N L5 NC
LPDP_TX2P K3 NC
LPDP_TX2N K4 NC
LPDP_TX3P J4 NC
LPDP_TX3N J5 NC
LPDP_AUX_P G4 NC
LPDP_AUX_N G5 NC
LPDP_CAL_DRV_OUT H3 NC
LPDP_CAL_VSS_EXT H6 NC
EDP_HPD Y6 NC
DP_WAKEUP Y2 NC

PAGE TITLE
SOC: LPDP
DRAWING NUMBER 051-02221
SIZE D
Apple Inc.
REVISION 9.0.0
BRANCH evt-1
PAGE 13 OF 80
SHEET 9 OF 51

NOTICE OF PROPRIETARY PROPERTY:
THE INFORMATION CONTAINED HEREIN IS THE PROPRIETARY PROPERTY OF APPLE INC.
THE POSESSOR AGREES TO THE FOLLOWING:
I TO MAINTAIN THIS DOCUMENT IN CONFIDENCE
II NOT TO REPRODUCE OR COPY IT
III NOT TO REVEAL OR PUBLISH IT IN WHOLE OR PART
IV ALL RIGHTS RESERVED

SOC - SERIAL INTERFACES

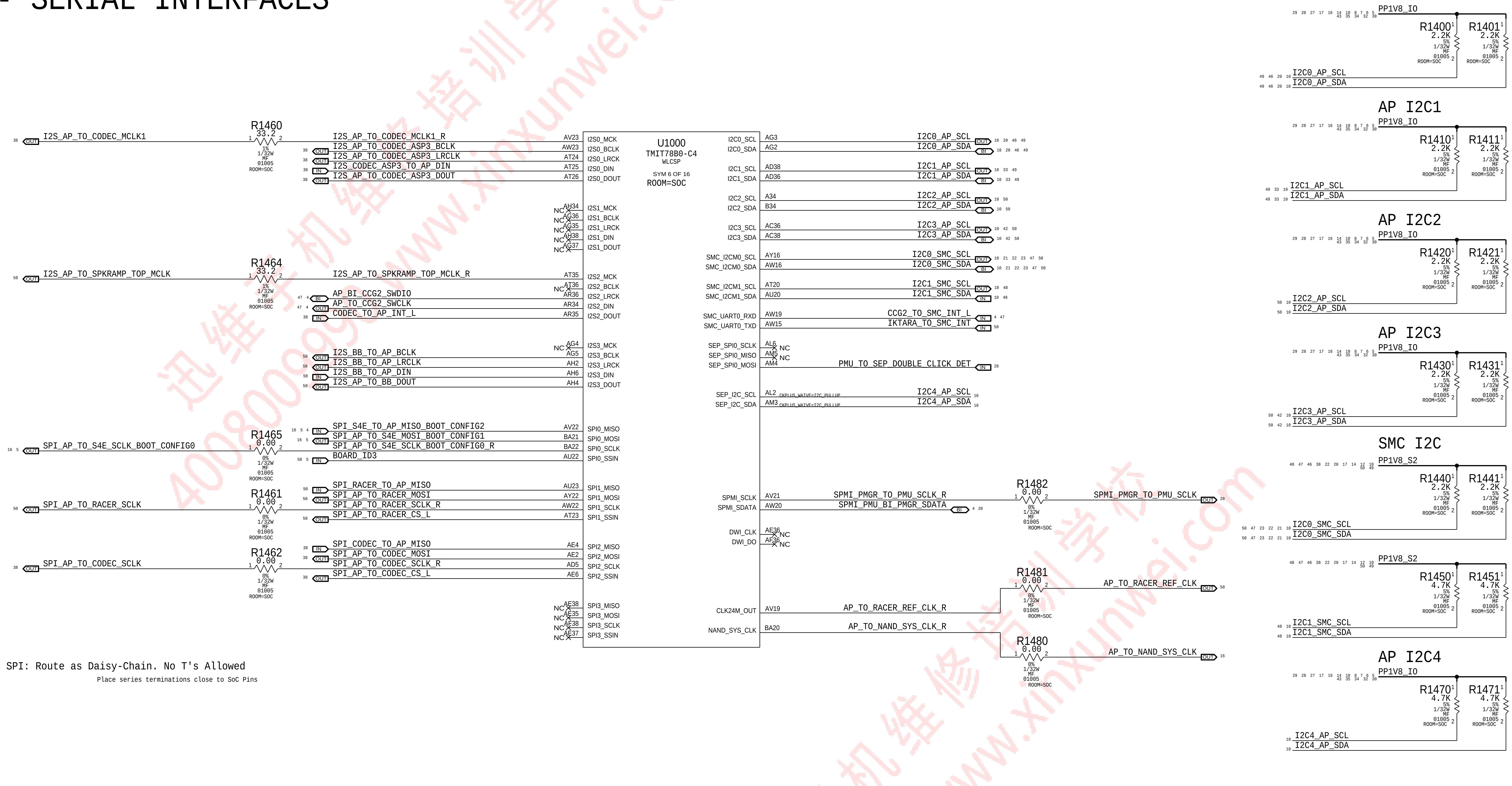

U1000
TMIT78B0-C4
WLCSP
SYM 6 OF 16
ROOM=SOC
R1460 33.2 1% 1/32W MF 01005 ROOM=SOC
I2S_AP_TO_CODEC_MCLK1
I2S_AP_TO_CODEC_MCLK1_R
I2S_AP_TO_CODEC_ASP3_BCLK
I2S_AP_TO_CODEC_ASP3_LRCLK
I2S_CODEC_ASP3_TO_AP_DIN
I2S_AP_TO_CODEC_ASP3_DOUT
I2S0_MCK
I2S0_BCLK
I2S0_LRCK
I2S0_DIN
I2S0_DOUT
I2S1_MCK
I2S1_BCLK
I2S1_LRCK
I2S1_DIN
I2S1_DOUT
R1464 33.2 1% 1/32W MF 01005 ROOM=SOC
I2S_AP_TO_SPKRAMP_TOP_MCLK
I2S_AP_TO_SPKRAMP_TOP_MCLK_R
AP_BI_CCG2_SWDIO
AP_TO_CCG2_SWCLK
CODEC_TO_AP_INT_L
I2S2_MCK
I2S2_BCLK
I2S2_LRCK
I2S2_DIN
I2S2_DOUT
I2S_BB_TO_AP_BCLK
I2S_BB_TO_AP_LRCLK
I2S_BB_TO_AP_DIN
I2S_AP_TO_BB_DOUT
I2S3_MCK
I2S3_BCLK
I2S3_LRCK
I2S3_DIN
I2S3_DOUT
R1465 0.00 0% 1/32W MF 01005 ROOM=SOC
SPI_AP_TO_S4E_SCLK_BOOT_CONFIG0
SPI_S4E_TO_AP_MISO_BOOT_CONFIG2
SPI_AP_TO_S4E_MOSI_BOOT_CONFIG1
SPI_AP_TO_S4E_SCLK_BOOT_CONFIG0_R
BOARD_ID3
SPI0_MISO
SPI0_MOSI
SPI0_SCLK
SPI0_SSIN
R1461 0.00 0% 1/32W MF 01005 ROOM=SOC
SPI_AP_TO_RACER_SCLK
SPI_RACER_TO_AP_MISO
SPI_AP_TO_RACER_MOSI
SPI_AP_TO_RACER_SCLK_R
SPI_AP_TO_RACER_CS_L
SPI1_MISO
SPI1_MOSI
SPI1_SCLK
SPI1_SSIN
R1462 0.00 0% 1/32W MF 01005 ROOM=SOC
SPI_AP_TO_CODEC_SCLK
SPI_CODEC_TO_AP_MISO
SPI_AP_TO_CODEC_MOSI
SPI_AP_TO_CODEC_SCLK_R
SPI_AP_TO_CODEC_CS_L
SPI2_MISO
SPI2_MOSI
SPI2_SCLK
SPI2_SSIN
SPI3_MISO
SPI3_MOSI
SPI3_SCLK
SPI3_SSIN
I2C0_SCL
I2C0_SDA
I2C0_AP_SCL
I2C0_AP_SDA
I2C1_SCL
I2C1_SDA
I2C1_AP_SCL
I2C1_AP_SDA
I2C2_SCL
I2C2_SDA
I2C2_AP_SCL
I2C2_AP_SDA
I2C3_SCL
I2C3_SDA
I2C3_AP_SCL
I2C3_AP_SDA
SMC_I2CM0_SCL
SMC_I2CM0_SDA
I2C0_SMC_SCL
I2C0_SMC_SDA
SMC_I2CM1_SCL
SMC_I2CM1_SDA
I2C1_SMC_SCL
I2C1_SMC_SDA
SMC_UART0_RXD
SMC_UART0_TXD
CCG2_TO_SMC_INT_L
IKTARA_TO_SMC_INT
SEP_SPI0_SCLK
SEP_SPI0_MISO
SEP_SPI0_MOSI
PMU_TO_SEP_DOUBLE_CLICK_DET
SEP_I2C_SCL
SEP_I2C_SDA
I2C4_AP_SCL
I2C4_AP_SDA
CKPLUS_WAIVE=I2C_PULLUP
SPMI_SCLK
SPMI_SDATA
SPMI_PMGR_TO_PMU_SCLK_R
SPMI_PMU_BI_PMGR_SDATA
R1482 0.00 0% 1/32W MF 01005 ROOM=SOC
SPMI_PMGR_TO_PMU_SCLK
DWI_CLK
DWI_DO
CLK24M_OUT
AP_TO_RACER_REF_CLK_R
R1481 0.00 0% 1/32W MF 01005 ROOM=SOC
AP_TO_RACER_REF_CLK
NAND_SYS_CLK
AP_TO_NAND_SYS_CLK_R
R1480 0.00 0% 1/32W MF 01005 ROOM=SOC
AP_TO_NAND_SYS_CLK
NC
AP I2C0
PP1V8_IO
R1400 2.2K 5% 1/32W MF 01005 ROOM=SOC
R1401 2.2K 5% 1/32W MF 01005 ROOM=SOC
I2C0_AP_SCL
I2C0_AP_SDA
AP I2C1
PP1V8_IO
R1410 2.2K 5% 1/32W MF 01005 ROOM=SOC
R1411 2.2K 5% 1/32W MF 01005 ROOM=SOC
I2C1_AP_SCL
I2C1_AP_SDA
AP I2C2
PP1V8_IO
R1420 2.2K 5% 1/32W MF 01005 ROOM=SOC
R1421 2.2K 5% 1/32W MF 01005 ROOM=SOC
I2C2_AP_SCL
I2C2_AP_SDA
AP I2C3
PP1V8_IO
R1430 2.2K 5% 1/32W MF 01005 ROOM=SOC
R1431 2.2K 5% 1/32W MF 01005 ROOM=SOC
I2C3_AP_SCL
I2C3_AP_SDA
SMC I2C
PP1V8_S2
R1440 2.2K 5% 1/32W MF 01005 ROOM=SOC
R1441 2.2K 5% 1/32W MF 01005 ROOM=SOC
I2C0_SMC_SCL
I2C0_SMC_SDA
PP1V8_S2
R1450 4.7K 5% 1/32W MF 01005 ROOM=SOC
R1451 4.7K 5% 1/32W MF 01005 ROOM=SOC
I2C1_SMC_SCL
I2C1_SMC_SDA
AP I2C4
PP1V8_IO
R1470 4.7K 5% 1/32W MF 01005 ROOM=SOC
R1471 4.7K 5% 1/32W MF 01005 ROOM=SOC
I2C4_AP_SCL
I2C4_AP_SDA

SPI: Route as Daisy-Chain. No T's Allowed

Place series terminations close to SoC Pins

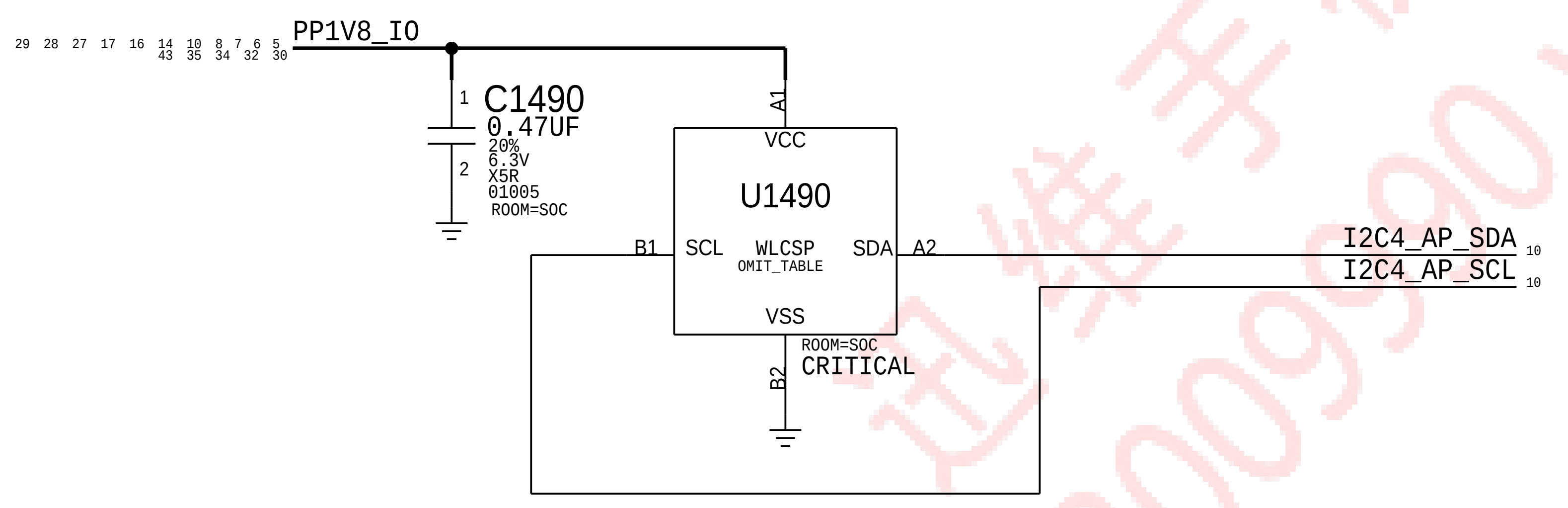

PP1V8_IO
C1490
0.47UF
20%
6.3V
X5R
01005
ROOM=SOC
U1490
VCC
SCL
WLCSP
OMIT_TABLE
SDA
VSS
ROOM=SOC
CRITICAL
A1
B1
A2
B2
I2C4_AP_SDA
I2C4_AP_SCL

PART#	QTY	DESCRIPTION	REFERENCE DESIGNATOR(S)	CRITICAL	BOM OPTION
335S00234	1	WLCSP	U1490	CRITICAL	COMMON

PART NUMBER	ALTERNATE FOR PART NUMBER	BOM OPTION	REF DES	COMMENTS:
335S00233	335S00234	BOM_TABLE_ALTS	U1490	U1490

SYNC_MASTER=test_mlb
SYNC_DATE=10/17/2016

PAGE TITLE
SOC: Serial

Apple Inc.

DRAWING NUMBER 051-02221
SIZE D
REVISION 9.0.0
BRANCH evt-1
PAGE 14 OF 80
SHEET 10 OF 51

NOTICE OF PROPRIETARY PROPERTY:

THE INFORMATION CONTAINED HEREIN IS THE PROPRIETARY PROPERTY OF APPLE INC.
THE POSESSOR AGREES TO THE FOLLOWING:
I TO MAINTAIN THIS DOCUMENT IN CONFIDENCE
II NOT TO REPRODUCE OR COPY IT
III NOT TO REVEAL OR PUBLISH IT IN WHOLE OR PART
IV ALL RIGHTS RESERVED

SOC - GPIO INTERFACES

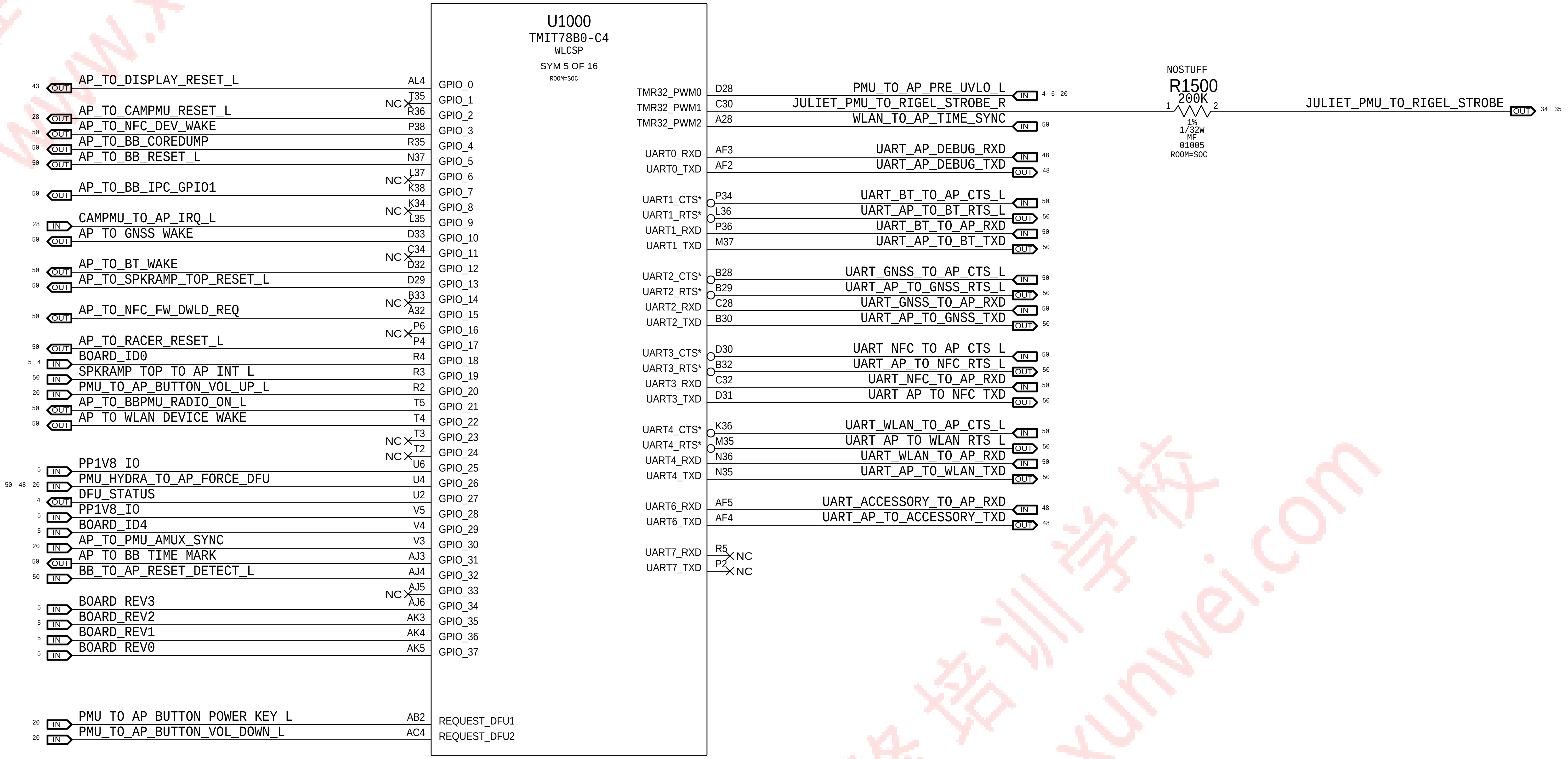
U1000
TMIT78B0-C4
WLCSP
SYM 5 OF 16
ROOM=SOC
43 OUT AP_TO_DISPLAY_RESET_L AL4 GPIO_0
NC T35 GPIO_1
28 OUT AP_TO_CAMPMU_RESET_L R36 GPIO_2
50 OUT AP_TO_NFC_DEV_WAKE P38 GPIO_3
50 OUT AP_TO_BB_COREDUMP R35 GPIO_4
50 OUT AP_TO_BB_RESET_L N37 GPIO_5
NC L37 GPIO_6
50 OUT AP_TO_BB_IPC_GPIO1 K38 GPIO_7
NC K34 GPIO_8
28 IN CAMPMU_TO_AP_IRQ_L L35 GPIO_9
50 OUT AP_TO_GNSS_WAKE D33 GPIO_10
NC C34 GPIO_11
50 OUT AP_TO_BT_WAKE D32 GPIO_12
50 OUT AP_TO_SPKRAMP_TOP_RESET_L D29 GPIO_13
NC B33 GPIO_14
50 OUT AP_TO_NFC_FW_DWLD_REQ A32 GPIO_15
NC P6 GPIO_16
50 OUT AP_TO_RACER_RESET_L P4 GPIO_17
5 4 IN BOARD_ID0 R4 GPIO_18
50 IN SPKRAMP_TOP_TO_AP_INT_L R3 GPIO_19
20 IN PMU_TO_AP_BUTTON_VOL_UP_L R2 GPIO_20
50 OUT AP_TO_BBPMU_RADIO_ON_L T5 GPIO_21
50 OUT AP_TO_WLAN_DEVICE_WAKE T4 GPIO_22
NC T3 GPIO_23
NC T2 GPIO_24
5 IN PP1V8_IO U6 GPIO_25
50 48 20 IN PMU_HYDRA_TO_AP_FORCE_DFU U4 GPIO_26
4 OUT DFU_STATUS U2 GPIO_27
5 IN PP1V8_IO V5 GPIO_28
5 IN BOARD_ID4 V4 GPIO_29
20 IN AP_TO_PMU_AMUX_SYNC V3 GPIO_30
50 OUT AP_TO_BB_TIME_MARK AJ3 GPIO_31
50 IN BB_TO_AP_RESET_DETECT_L AJ4 GPIO_32
NC AJ5 GPIO_33
5 IN BOARD_REV3 AJ6 GPIO_34
5 IN BOARD_REV2 AK3 GPIO_35
5 IN BOARD_REV1 AK4 GPIO_36
5 IN BOARD_REV0 AK5 GPIO_37
20 IN PMU_TO_AP_BUTTON_POWER_KEY_L AB2 REQUEST_DFU1
20 IN PMU_TO_AP_BUTTON_VOL_DOWN_L AC4 REQUEST_DFU2
TMR32_PWM0 D28 PMU_TO_AP_PRE_UVLO_L IN 4 6 20
TMR32_PWM1 C30 JULIET_PMU_TO_RIGEL_STROBE_R
TMR32_PWM2 A28 WLAN_TO_AP_TIME_SYNC IN 50
UART0_RXD AF3 UART_AP_DEBUG_RXD IN 48
UART0_TXD AF2 UART_AP_DEBUG_TXD OUT 48
UART1_CTS* P34 UART_BT_TO_AP_CTS_L IN 50
UART1_RTS* L36 UART_AP_TO_BT_RTS_L OUT 50
UART1_RXD P36 UART_BT_TO_AP_RXD IN 50
UART1_TXD M37 UART_AP_TO_BT_TXD OUT 50
UART2_CTS* B28 UART_GNSS_TO_AP_CTS_L IN 50
UART2_RTS* B29 UART_AP_TO_GNSS_RTS_L OUT 50
UART2_RXD C28 UART_GNSS_TO_AP_RXD IN 50
UART2_TXD B30 UART_AP_TO_GNSS_TXD OUT 50
UART3_CTS* D30 UART_NFC_TO_AP_CTS_L IN 50
UART3_RTS* B32 UART_AP_TO_NFC_RTS_L OUT 50
UART3_RXD C32 UART_NFC_TO_AP_RXD IN 50
UART3_TXD D31 UART_AP_TO_NFC_TXD OUT 50
UART4_CTS* K36 UART_WLAN_TO_AP_CTS_L IN 50
UART4_RTS* M35 UART_AP_TO_WLAN_RTS_L OUT 50
UART4_RXD N36 UART_WLAN_TO_AP_RXD IN 50
UART4_TXD N35 UART_AP_TO_WLAN_TXD OUT 50
UART6_RXD AF5 UART_ACCESSORY_TO_AP_RXD IN 48
UART6_TXD AF4 UART_AP_TO_ACCESSORY_TXD OUT 48
UART7_RXD R5 NC
UART7_TXD P2 NC
NOSTUFF
R1500
200K
1 2
1%
1/32W
MF
01005
ROOM=SOC
JULIET_PMU_TO_RIGEL_STROBE OUT 34 35

SYNC_MASTER=test_mlb SYNC_DATE=10/13/2016

PAGE TITLE

SOC: GPIO & UART

DRAWING NUMBER 051-02221
SIZE D

Apple Inc.

REVISION [illegible]

NOTICE OF PROPRIETARY PROPERTY:

THE INFORMATION CONTAINED HEREIN IS THE PROPRIETARY PROPERTY OF APPLE INC.
THE POSESSOR AGREES TO THE FOLLOWING:
I TO MAINTAIN THIS DOCUMENT IN CONFIDENCE
II NOT TO REPRODUCE OR COPY IT
III NOT TO REVEAL OR PUBLISH IT IN WHOLE OR PART
IV ALL RIGHTS RESERVED

BRANCH evt-1

PAGE 15 OF 80

SHEET 11 OF 51

迅维职业技能培训中心
400-800-9990

SOC - AOP

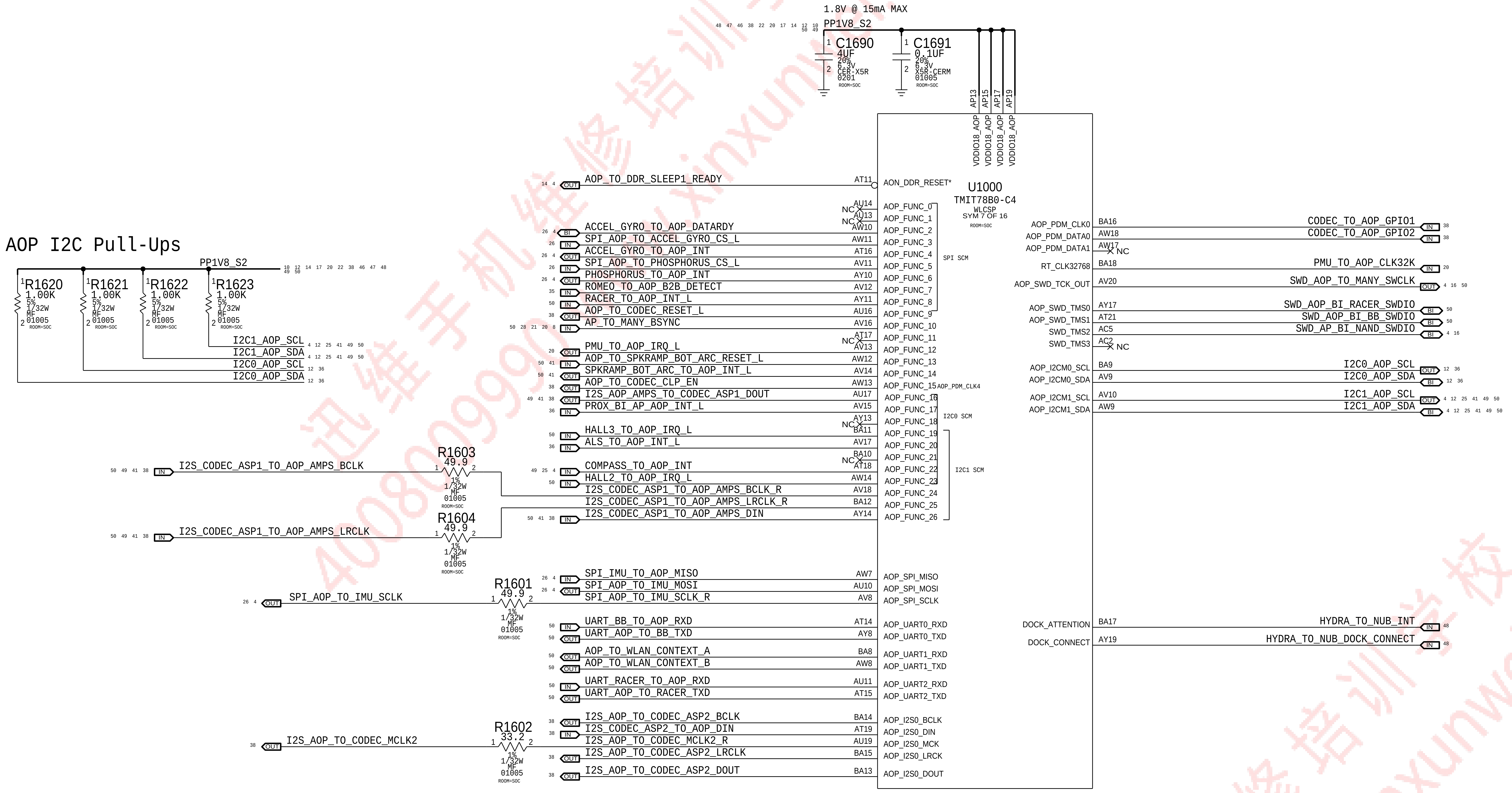
1.8V @ 15mA MAX
PP1V8_S2
C1690
4UF
20%
6.3V
CER-X5R
0201
ROOM=SOC
C1691
0.1UF
20%
6.3V
X5R-CERM
01005
ROOM=SOC
AP13
AP15
AP17
AP19
VDDIO18_AOP
U1000
TMIT78B0-C4
WLCSP
SYM 7 OF 16
ROOM=SOC
AOP_TO_DDR_SLEEP1_READY
AT11
AON_DDR_RESET*
NC
ACCEL_GYRO_TO_AOP_DATARDY
SPI_AOP_TO_ACCEL_GYRO_CS_L
ACCEL_GYRO_TO_AOP_INT
SPI_AOP_TO_PHOSPHORUS_CS_L
PHOSPHORUS_TO_AOP_INT
ROMEO_TO_AOP_B2B_DETECT
RACER_TO_AOP_INT_L
AOP_TO_CODEC_RESET_L
AP_TO_MANY_BSYNC
PMU_TO_AOP_IRQ_L
AOP_TO_SPKRAMP_BOT_ARC_RESET_L
SPKRAMP_BOT_ARC_TO_AOP_INT_L
AOP_TO_CODEC_CLP_EN
I2S_AOP_AMPS_TO_CODEC_ASP1_DOUT
PROX_BI_AP_AOP_INT_L
HALL3_TO_AOP_IRQ_L
ALS_TO_AOP_INT_L
COMPASS_TO_AOP_INT
HALL2_TO_AOP_IRQ_L
I2S_CODEC_ASP1_TO_AOP_AMPS_BCLK_R
I2S_CODEC_ASP1_TO_AOP_AMPS_LRCLK_R
I2S_CODEC_ASP1_TO_AOP_AMPS_DIN
AOP_FUNC_0 … AOP_FUNC_26
SPI SCM
AOP_PDM_CLK4
I2C0 SCM
I2C1 SCM
AOP I2C Pull-Ups
PP1V8_S2
R1620
R1621
R1622
R1623
1.00K
5%
1/32W
MF
01005
ROOM=SOC
I2C1_AOP_SCL
I2C1_AOP_SDA
I2C0_AOP_SCL
I2C0_AOP_SDA
I2S_CODEC_ASP1_TO_AOP_AMPS_BCLK
R1603
49.9
I2S_CODEC_ASP1_TO_AOP_AMPS_LRCLK
R1604
49.9
1%
1/32W
MF
01005
ROOM=SOC
SPI_IMU_TO_AOP_MISO
SPI_AOP_TO_IMU_MOSI
SPI_AOP_TO_IMU_SCLK_R
SPI_AOP_TO_IMU_SCLK
R1601
49.9
AOP_SPI_MISO
AOP_SPI_MOSI
AOP_SPI_SCLK
UART_BB_TO_AOP_RXD
UART_AOP_TO_BB_TXD
AOP_TO_WLAN_CONTEXT_A
AOP_TO_WLAN_CONTEXT_B
UART_RACER_TO_AOP_RXD
UART_AOP_TO_RACER_TXD
AOP_UART0_RXD
AOP_UART0_TXD
AOP_UART1_RXD
AOP_UART1_TXD
AOP_UART2_RXD
AOP_UART2_TXD
I2S_AOP_TO_CODEC_ASP2_BCLK
I2S_CODEC_ASP2_TO_AOP_DIN
I2S_AOP_TO_CODEC_MCLK2_R
I2S_AOP_TO_CODEC_ASP2_LRCLK
I2S_AOP_TO_CODEC_ASP2_DOUT
I2S_AOP_TO_CODEC_MCLK2
R1602
33.2
AOP_I2S0_BCLK
AOP_I2S0_DIN
AOP_I2S0_MCK
AOP_I2S0_LRCK
AOP_I2S0_DOUT
AOP_PDM_CLK0
AOP_PDM_DATA0
AOP_PDM_DATA1
RT_CLK32768
AOP_SWD_TCK_OUT
AOP_SWD_TMS0
AOP_SWD_TMS1
AOP_SWD_TMS2
SWD_TMS3
AOP_I2CM0_SCL
AOP_I2CM0_SDA
AOP_I2CM1_SCL
AOP_I2CM1_SDA
CODEC_TO_AOP_GPIO1
CODEC_TO_AOP_GPIO2
PMU_TO_AOP_CLK32K
SWD_AOP_TO_MANY_SWCLK
SWD_AOP_BI_RACER_SWDIO
SWD_AOP_BI_BB_SWDIO
SWD_AP_BI_NAND_SWDIO
I2C0_AOP_SCL
I2C0_AOP_SDA
I2C1_AOP_SCL
I2C1_AOP_SDA
DOCK_ATTENTION
DOCK_CONNECT
HYDRA_TO_NUB_INT
HYDRA_TO_NUB_DOCK_CONNECT
IN
OUT
BI

SYNC_MASTER=test_mlb

SYNC_DATE=10/17/2016

PAGE TITLE

SOC: AOP

DRAWING NUMBER 051-02221

SIZE D

Apple Inc.

REVISION 9.0.0

BRANCH evt-1

PAGE 16 OF 80

SHEET 12 OF 51

NOTICE OF PROPRIETARY PROPERTY:

THE INFORMATION CONTAINED HEREIN IS THE PROPRIETARY PROPERTY OF APPLE INC. THE POSESSOR AGREES TO THE FOLLOWING:

I TO MAINTAIN THIS DOCUMENT IN CONFIDENCE

II NOT TO REPRODUCE OR COPY IT

III NOT TO REVEAL OR PUBLISH IT IN WHOLE OR PART

IV ALL RIGHTS RESERVED

SOC - CPU, GPU & SOC RAILS

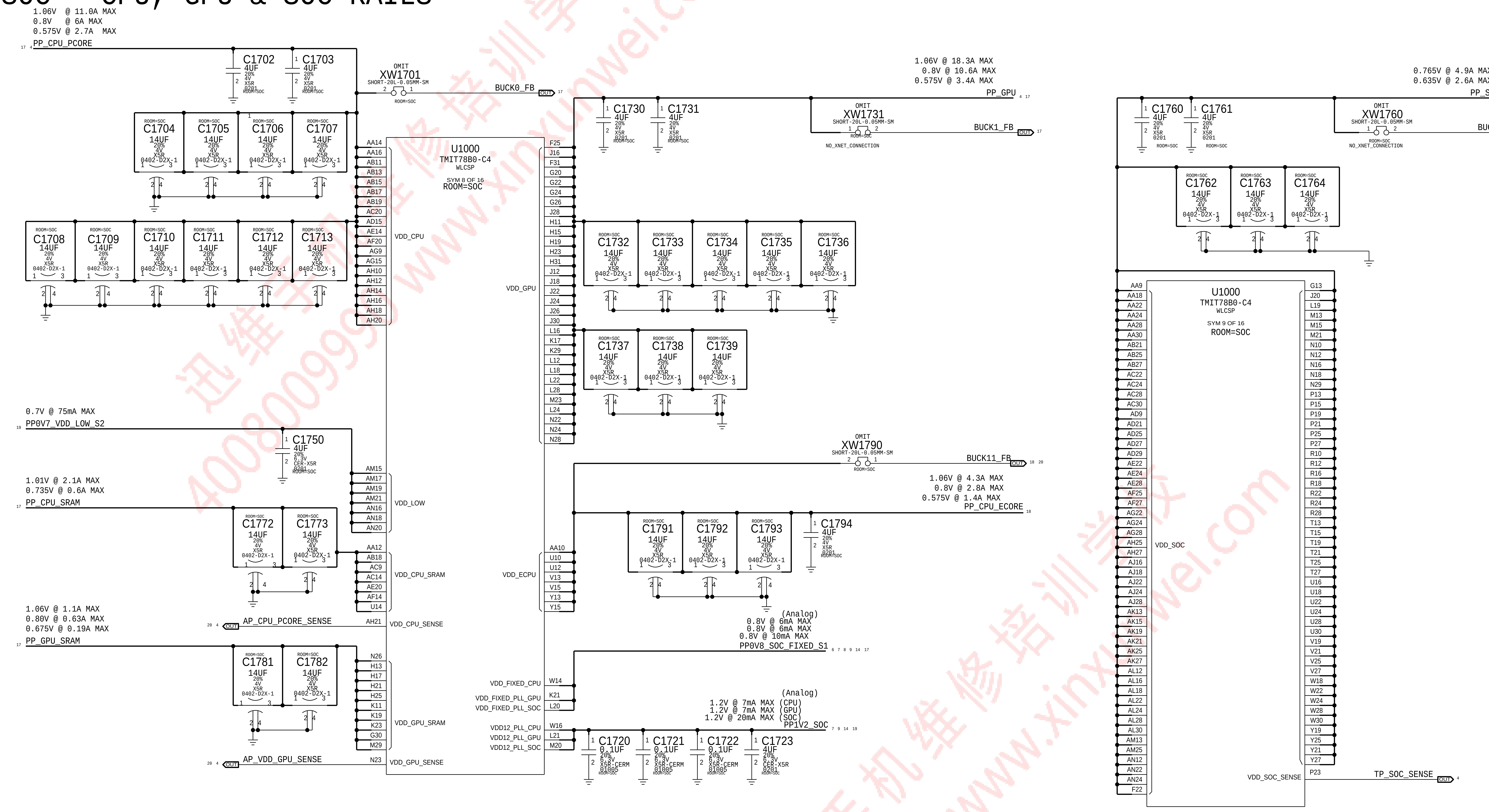
1.06V @ 11.0A MAX
0.8V @ 6A MAX
0.575V @ 2.7A MAX
PP_CPU_PCORE
C1702 4UF 20% 4V X5R 0201 ROOM=SOC
C1703 4UF 20% 4V X5R 0201 ROOM=SOC
OMIT XW1701 SHORT-20L-0.05MM-SM ROOM=SOC
BUCK0_FB
OUT
C1704 C1705 C1706 C1707 14UF 20% 4V X5R 0402-D2X-1 ROOM=SOC
C1708 C1709 C1710 C1711 C1712 C1713 14UF 20% 4V X5R 0402-D2X-1 ROOM=SOC
U1000 TMIT78B0-C4 WLCSP SYM 8 OF 16 ROOM=SOC
AA14 AA16 AB11 AB13 AB15 AB17 AB19 AC20 AD15 AE14 AF20 AG9 AG15 AH10 AH12 AH14 AH16 AH18 AH20
VDD_CPU
F25 J16 F31 G20 G22 G24 G26 J28 H11 H15 H19 H23 H31 J12 J18 J22 J24 J26 J30 L16 K17 K29 L12 L18 L22 L28 M23 L24 N22 N24 N28
VDD_GPU
1.06V @ 18.3A MAX
0.8V @ 10.6A MAX
0.575V @ 3.4A MAX
PP_GPU
C1730 C1731 4UF 20% 4V X5R 0201 ROOM=SOC
OMIT XW1731 SHORT-20L-0.05MM-SM ROOM=SOC
NO_XNET_CONNECTION
BUCK1_FB
C1732 C1733 C1734 C1735 C1736 14UF 20% 4V X5R 0402-D2X-1 ROOM=SOC
C1737 C1738 C1739 14UF 20% 4V X5R 0402-D2X-1 ROOM=SOC
0.7V @ 75mA MAX
PP0V7_VDD_LOW_S2
C1750 4UF 20% 6.3V CER-X5R 0201 ROOM=SOC
AM15 AM17 AM19 AM21 AN16 AN18 AN20
VDD_LOW
1.01V @ 2.1A MAX
0.735V @ 0.6A MAX
PP_CPU_SRAM
C1772 C1773 14UF 20% 4V X5R 0402-D2X-1 ROOM=SOC
AA12 AB18 AC9 AC14 AE20 AF14 U14
VDD_CPU_SRAM
AP_CPU_PCORE_SENSE
AH21 VDD_CPU_SENSE
1.06V @ 1.1A MAX
0.80V @ 0.63A MAX
0.675V @ 0.19A MAX
PP_GPU_SRAM
C1781 C1782 14UF 20% 4V X5R 0402-D2X-1 ROOM=SOC
N26 H13 H17 H21 H25 K11 K19 K23 G30 M29
VDD_GPU_SRAM
AP_VDD_GPU_SENSE
N23 VDD_GPU_SENSE
AA10 U10 U12 V13 V15 Y13 Y15
VDD_ECPU
OMIT XW1790 SHORT-20L-0.05MM-SM ROOM=SOC
BUCK11_FB
1.06V @ 4.3A MAX
0.8V @ 2.8A MAX
0.575V @ 1.4A MAX
PP_CPU_ECORE
C1791 C1792 C1793 14UF 20% 4V X5R 0402-D2X-1 ROOM=SOC
C1794 4UF 20% 4V X5R 0201 ROOM=SOC
(Analog)
0.8V @ 6mA MAX
0.8V @ 6mA MAX
0.8V @ 10mA MAX
PP0V8_SOC_FIXED_S1
W14 VDD_FIXED_CPU
K21 VDD_FIXED_PLL_GPU
L20 VDD_FIXED_PLL_SOC
(Analog)
1.2V @ 7mA MAX (CPU)
1.2V @ 7mA MAX (GPU)
1.2V @ 20mA MAX (SOC)
PP1V2_SOC
W16 VDD12_PLL_CPU
L21 VDD12_PLL_GPU
M20 VDD12_PLL_SOC
C1720 C1721 C1722 0.1UF 20% 6.3V X5R-CERM 01005 ROOM=SOC
C1723 4UF 20% 4V CER-X5R 0201 ROOM=SOC
0.765V @ 4.9A MAX
0.635V @ 2.6A MAX
PP_SOC_S1
C1760 C1761 4UF 20% 4V X5R 0201 ROOM=SOC
OMIT XW1760 SHORT-20L-0.05MM-SM ROOM=SOC
NO_XNET_CONNECTION
BUCK2_FB
C1762 C1763 C1764 14UF 20% 4V X5R 0402-D2X-1 ROOM=SOC
U1000 TMIT78B0-C4 WLCSP SYM 9 OF 16 ROOM=SOC
AA9 AA18 AA22 AA24 AA28 AA30 AB21 AB25 AB27 AC22 AC24 AC28 AC30 AD9 AD21 AD25 AD27 AD29 AE22 AE24 AE28 AF25 AF27 AG22 AG24 AG28 AH25 AH27 AJ16 AJ18 AJ22 AJ24 AJ28 AK13 AK15 AK19 AK21 AK25 AK27 AL12 AL16 AL18 AL22 AL24 AL28 AL30 AM13 AM25 AN12 AN22 AN24 F22
VDD_SOC
G13 J20 L19 M13 M15 M21 N10 N12 N16 N18 N29 P13 P15 P19 P21 P25 P27 P29 R10 R12 R16 R18 R22 R24 R28 T13 T15 T19 T21 T25 T27 U16 U18 U22 U24 U28 U30 V19 V21 V25 V27 W18 W22 W24 W28 W30 Y19 Y25 Y21 Y27 P23
VDD_SOC_SENSE
TP_SOC_SENSE

PAGE TITLE
SOC: Power (1/3)

DRAWING NUMBER 051-02221
SIZE D

Apple Inc.

NOTICE OF PROPRIETARY PROPERTY:

THE INFORMATION CONTAINED HEREIN IS THE PROPRIETARY PROPERTY OF APPLE INC. THE POSESSOR AGREES TO THE FOLLOWING:
I TO MAINTAIN THIS DOCUMENT IN CONFIDENCE
II NOT TO REPRODUCE OR COPY IT
III NOT TO REVEAL OR PUBLISH IT IN WHOLE OR PART
IV ALL RIGHTS RESERVED

BRANCH evt-1

17 OF 80

SHEET 13 OF 51

迅维手机维修培训学校 www.xinyunwei.com 4008009990
迅维职业技能培训中心 400-800-9990

SOC - POWER SUPPLIES

0.6V @ 262mA MAX
PP0V6_VDDQL_S1
C1830 4UF 20% 4V X5R 0201 ROOM=SOC
C1831 4UF 20% 4V X5R 0201 ROOM=SOC
C1832 4UF 20% 4V X5R 0201 ROOM=SOC
C1833 4UF 20% 4V X5R 0201 ROOM=SOC
Place caps on SoC Corners
DDR IMPEDANCE CONTROL
PP0V6_VDDQL_S1
R1860 240 1% 1/32W MF 01005 ROOM=SOC
R1861 240 1% 1/32W MF 01005 ROOM=SOC
R1862 240 1% 1/32W MF 01005 ROOM=SOC
R1863 240 1% 1/32W MF 01005 ROOM=SOC
R1870 240 1% 1/32W MF 01005 ROOM=SOC
R1871 240 1% 1/32W MF 01005 ROOM=SOC
0.8V @ 0.9A MAX
PP0V8_SOC_FIXED_S1
ROOM=SOC C1801 14UF 20% 4V X5R 0402-D2X-1
C1802 4UF 20% 4V X5R 0201 ROOM=SOC
C1803 4UF 20% 4V X5R 0201 ROOM=SOC
C1804 4UF 20% 4V X5R 0201 ROOM=SOC
C1805 4UF 20% 4V X5R 0201 ROOM=SOC
U1000 TMIT78B0-C4 WLCSP SYM 10 OF 16 ROOM=SOC
AA20 AA26 AB9 AB23 AB29 AC26 AD23 AD31 AE26 AF23 AF29 AG26 AH23 AH29 AJ14 AJ20 AJ26 AK17 AK23 AL14 AL20 AL26 AM11 AM23 AP11 AP21 AP24 F19 F23 M11 M17 N14 N20 P11 P17 P29 R14 R20 R26 T11 T17 T23 T31 U20 U26
VDD_FIXED
V17 V23 V29 W20 W26 Y9 Y17 Y23 Y29
LPADC_REF_P BA19
LPADC_REF_M AY20
PP1V2_LPADC
C1870 2.2UF 20% 6.3V X5R-CERM 0201 ROOM=SOC
OMIT XW1870 SHORT-20L-0.05MM-SM ROOM=SOC
LPADC_GND
(Analog) 0.8V @ 8mA MAX
PP0V8_SOC_FIXED_S1
VDD_FIXED_PLL_DDR0 AK11
VDD_FIXED_PLL_DDR1 AJ29
VDD_FIXED_PLL_DDR2 D8
VDD_FIXED_PLL_DDR3 R29
VDDQL Voltage Sense ->
U1000 TMIT78B0-C4 WLCSP SYM 11 OF 16 ROOM=SOC
AD1 AF1 AH1 AK9 AP9 AT1 AV1 VDDQL_DDR0
AD39 AF31 AF39 AK31 AP39 AT39 AV39 VDDQL_DDR1
D1 F1 F9 H1 K9 T1 V1 C4 NC VDDQL_DDR2
D39 F39 K31 P31 P39 T39 V39 VDDQL_DDR3
DDR0_RREF AP5 DDR0_RREF
DDR1_RREF AN35 DDR1_RREF
DDR2_RREF E5 DDR2_RREF
DDR3_RREF H35 DDR3_RREF
DDR0_RET* AR5
DDR1_RET* AM35
DDR2_RET* E3
DDR3_RET* G35
AOP_TO_DDR_SLEEP1_READY IN
DDR0_ZQ AJ2 DDR0_ZQ
DDR3_ZQ N38 DDR3_ZQ
DDR0_SYS_ALIVE AP6
DDR1_SYS_ALIVE AM34
DDR2_SYS_ALIVE E4
DDR3_SYS_ALIVE H34
SYSTEM_ALIVE IN
1.8V @ 200mA MAX
PP1V8_S2
VDD1 AB3 AB37 AW3 AW37 B3 B37 Y3 Y37
C1840 2.2UF 20% 6.3V X5R-CERM 0201 ROOM=SOC
C1841 2.2UF 20% 6.3V X5R-CERM 0201 ROOM=SOC
C1842 2.2UF 20% 6.3V X5R-CERM 0201 ROOM=SOC
C1843 2.2UF 20% 6.3V X5R-CERM 0201 ROOM=SOC
1.06V - 1.17V @ (Inc in VDD2)
PP1V1_S2
AR6 VDDIO11_RET_DDR0
AN34 VDDIO11_RET_DDR1
E6 VDDIO11_RET_DDR2
G34 VDDIO11_RET_DDR3
(Analog) 1.2V @ 16mA MAX
PP1V2_SOC
AJ11 VDDIO12_PLL_DDR0
AK29 VDDIO12_PLL_DDR1
D9 VDDIO12_PLL_DDR2
T29 VDDIO12_PLL_DDR3
0.875V @ 0.8A MAX
0.730V @ 0.51A MAX
0.600V @ 0.35A MAX
PP_DCS_S1
AJ10 AP10 VDD_DCS_DDR0
AE30 AK30 VDD_DCS_DDR1
F10 L10 A4 NC VDD_DCS_DDR2
K30 R30 VDD_DCS_DDR3
C1860 4UF 20% 4V X5R 0201 ROOM=SOC
C1861 4UF 20% 4V X5R 0201 ROOM=SOC
C1862 4UF 20% 4V X5R 0201 ROOM=SOC
C1863 4UF 20% 4V X5R 0201 ROOM=SOC
Place caps on SoC Corners
DCS Voltage Sense ->
VDD2 AA2 AA38 AC39 AH39 AJ1 AK39 AM1 AN39 AP1 AV2 AV37 AW2 AW38 C2 C3 C38 D38 H39 J1 K39 M1 N39 P1 W1
1.06V - 1.17V @2.2A MAX
PP1V1_S2
C1850 4UF 20% 4V X5R 0201 ROOM=SOC
C1851 4UF 20% 4V X5R 0201 ROOM=SOC
C1852 4UF 20% 4V X5R 0201 ROOM=SOC
C1853 4UF 20% 4V X5R 0201 ROOM=SOC
1.8V @ 60mA MAX
PP1V8_IO
C1810 26UF 20% 4V X5R 0402-0.1MM ROOM=SOC
C1811 4UF 20% 6.3V CER-X5R 0201 ROOM=SOC
C1812 4UF 20% 6.3V CER-X5R 0201 ROOM=SOC
C1813 4UF 20% 6.3V CER-X5R 0201 ROOM=SOC
U1000 TMIT78B0-C4 WLCSP SYM 12 OF 16 ROOM=SOC
AP23 AP25 VDDIO18_GRP1
AB31 V31 Y31 VDDIO18_GRP2
F21 D23 VDDIO18_GRP3
AF9 V9 VDDIO18_GRP4
VDD18_TSADC_CPU0 T12
VDD18_TSADC_CPU1 AF21
VDD18_TSADC_CPU2 AJ9
VDD18_TSADC_CPU3 Y16
VDD18_TSADC_GPU0 G21
VDD18_TSADC_SOC0 AJ12
VDD18_TSADC_SOC1 AD30
VDD18_TSADC_SOC2 J31
VDD18_EFUSE1 H12
VDD18_EFUSE2 AT6
VDD18_FMON AN13
VDD18_LPOSC AN19
1.8V @ 5.3mA MAX (CPU)
1.8V @ 1.1mA MAX (GPU)
1.8V @ 3.3mA MAX (SOC)
PP1V8_IO
1.8V @ 1mA MAX
PP1V8_IO
PP1V8_LPOSC_S2
R1880 300 5% 1/32W MF 01005 ROOM=SOC
1.8V @ 1mA MAX
PP1V8_S2
C1880 56PF 5% 25V NP0-C0G-CERM 01005 ROOM=SOC
C1881 0.47UF 20% 6.3V X5R 01005 ROOM=SOC

PAGE TITLE
SOC: Power (2/3)

DRAWING NUMBER 051-02221
SIZE D

Apple Inc.

NOTICE OF PROPRIETARY PROPERTY:

THE INFORMATION CONTAINED HEREIN IS THE PROPRIETARY PROPERTY OF APPLE INC. THE POSESSOR AGREES TO THE FOLLOWING:
I TO MAINTAIN THIS DOCUMENT IN CONFIDENCE
II NOT TO REPRODUCE OR COPY IT
III NOT TO REVEAL OR PUBLISH IT IN WHOLE OR PART
IV ALL RIGHTS RESERVED

BRANCH evt-1

PAGE 18 OF 80

SHEET 14 OF 51

SOC - POWER SUPPLIES

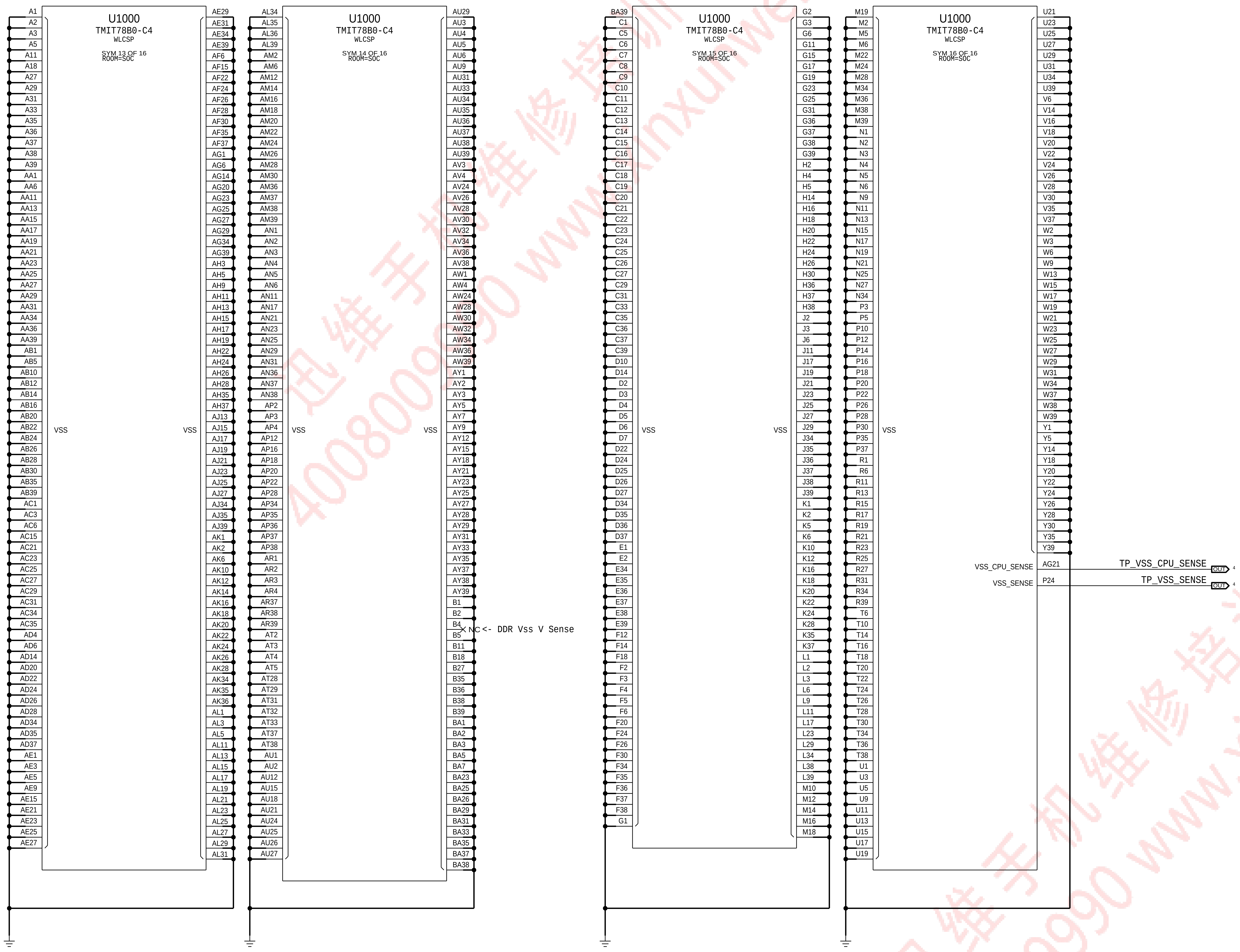
U1000
TMIT78B0-C4
WLCSP
SYM 13 OF 16
ROOM=SOC
VSS
A1 A2 A3 A5 A11 A18 A27 A29 A31 A33 A35 A36 A37 A38 A39 AA1 AA6 AA11 AA13 AA15 AA17 AA19 AA21 AA23 AA25 AA27 AA29 AA31 AA34 AA36 AA39 AB1 AB5 AB10 AB12 AB14 AB16 AB20 AB22 AB24 AB26 AB28 AB30 AB35 AB39 AC1 AC3 AC6 AC15 AC21 AC23 AC25 AC27 AC29 AC31 AC34 AC35 AD4 AD6 AD14 AD20 AD22 AD24 AD26 AD28 AD34 AD35 AD37 AE1 AE3 AE5 AE9 AE15 AE21 AE23 AE25 AE27
AE29 AE31 AE34 AE39 AF6 AF15 AF22 AF24 AF26 AF28 AF30 AF35 AF37 AG1 AG6 AG14 AG20 AG23 AG25 AG27 AG29 AG34 AG39 AH3 AH5 AH9 AH11 AH13 AH15 AH17 AH19 AH22 AH24 AH26 AH28 AH35 AH37 AJ13 AJ15 AJ17 AJ19 AJ21 AJ23 AJ25 AJ27 AJ34 AJ35 AJ39 AK1 AK2 AK6 AK10 AK12 AK14 AK16 AK18 AK20 AK22 AK24 AK26 AK28 AK34 AK35 AK36 AL1 AL3 AL5 AL11 AL13 AL15 AL17 AL19 AL21 AL23 AL25 AL27 AL29 AL31
U1000
TMIT78B0-C4
WLCSP
SYM 14 OF 16
ROOM=SOC
VSS
AL34 AL35 AL36 AL39 AM2 AM6 AM12 AM14 AM16 AM18 AM20 AM22 AM24 AM26 AM28 AM30 AM36 AM37 AM38 AM39 AN1 AN2 AN3 AN4 AN5 AN6 AN11 AN17 AN21 AN23 AN25 AN29 AN31 AN36 AN37 AN38 AP2 AP3 AP4 AP12 AP16 AP18 AP20 AP22 AP28 AP34 AP35 AP36 AP37 AP38 AR1 AR2 AR3 AR4 AR37 AR38 AR39 AT2 AT3 AT4 AT5 AT28 AT29 AT31 AT32 AT33 AT37 AT38 AU1 AU2 AU12 AU15 AU18 AU21 AU24 AU25 AU26 AU27
AU29 AU3 AU4 AU5 AU6 AU9 AU31 AU33 AU34 AU35 AU36 AU37 AU38 AU39 AV3 AV4 AV24 AV26 AV28 AV30 AV32 AV34 AV36 AV38 AW1 AW4 AW24 AW28 AW30 AW32 AW34 AW36 AW39 AY1 AY2 AY3 AY5 AY7 AY9 AY12 AY15 AY18 AY21 AY23 AY25 AY27 AY28 AY29 AY31 AY33 AY35 AY37 AY38 AY39 B1 B2 B4 B5 B11 B18 B27 B35 B36 B38 B39 BA1 BA2 BA3 BA5 BA7 BA23 BA25 BA26 BA29 BA31 BA33 BA35 BA37 BA38
NC
<- DDR Vss V Sense
U1000
TMIT78B0-C4
WLCSP
SYM 15 OF 16
ROOM=SOC
VSS
BA39 C1 C5 C6 C7 C8 C9 C10 C11 C12 C13 C14 C15 C16 C17 C18 C19 C20 C21 C22 C23 C24 C25 C26 C27 C29 C31 C33 C35 C36 C37 C39 D10 D14 D2 D3 D4 D5 D6 D7 D22 D24 D25 D26 D27 D34 D35 D36 D37 E1 E2 E34 E35 E36 E37 E38 E39 F12 F14 F18 F2 F3 F4 F5 F6 F20 F24 F26 F30 F34 F35 F36 F37 F38 G1
G2 G3 G6 G11 G15 G17 G19 G23 G25 G31 G36 G37 G38 G39 H2 H4 H5 H14 H16 H18 H20 H22 H24 H26 H30 H36 H37 H38 J2 J3 J6 J11 J17 J19 J21 J23 J25 J27 J29 J34 J35 J36 J37 J38 J39 K1 K2 K5 K6 K10 K12 K16 K18 K20 K22 K24 K28 K35 K37 L1 L2 L3 L6 L9 L11 L17 L23 L29 L34 L38 L39 M10 M12 M14 M16 M18
U1000
TMIT78B0-C4
WLCSP
SYM 16 OF 16
ROOM=SOC
VSS
M19 M2 M5 M6 M22 M24 M28 M34 M36 M38 M39 N1 N2 N3 N4 N5 N6 N9 N11 N13 N15 N17 N19 N21 N25 N27 N34 P3 P5 P10 P12 P14 P16 P18 P20 P22 P26 P28 P30 P35 P37 R1 R6 R11 R13 R15 R17 R19 R21 R23 R25 R27 R31 R34 R39 T6 T10 T14 T16 T18 T20 T22 T24 T26 T28 T30 T34 T36 T38 U1 U3 U5 U9 U11 U13 U15 U17 U19
U21 U23 U25 U27 U29 U31 U34 U39 V6 V14 V16 V18 V20 V22 V24 V26 V28 V30 V35 V37 W2 W3 W6 W9 W13 W15 W17 W19 W21 W23 W25 W27 W29 W31 W34 W37 W38 W39 Y1 Y5 Y14 Y18 Y20 Y22 Y24 Y26 Y28 Y30 Y35 Y39
VSS_CPU_SENSE AG21
VSS_SENSE P24
TP_VSS_CPU_SENSE OUT 4
TP_VSS_SENSE OUT 4

PAGE TITLE
SOC: Power (3/3)

DRAWING NUMBER 051-02221 SIZE D

Apple Inc.

NOTICE OF PROPRIETARY PROPERTY:

THE INFORMATION CONTAINED HEREIN IS THE PROPRIETARY PROPERTY OF APPLE INC.
THE POSESSOR AGREES TO THE FOLLOWING:
I TO MAINTAIN THIS DOCUMENT IN CONFIDENCE
II NOT TO REPRODUCE OR COPY IT
III NOT TO REVEAL OR PUBLISH IT IN WHOLE OR PART
IV ALL RIGHTS RESERVED

BRANCH evt-1

PAGE 19 OF 80

SHEET 15 OF 51

S4E NAND

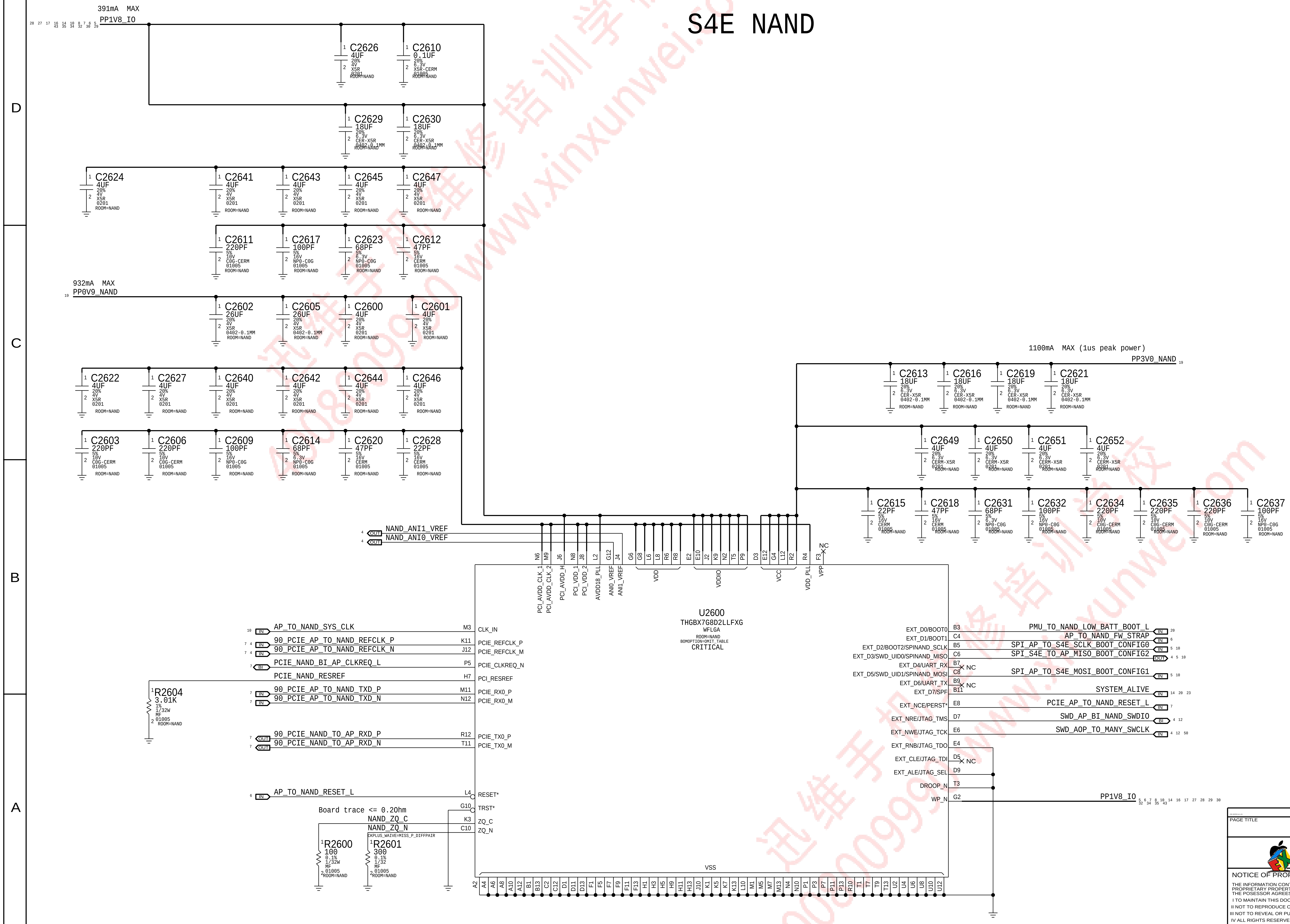
391mA MAX
PP1V8_IO
C2626 4UF 20% 4V X5R 0201 ROOM=NAND
C2610 0.1UF 20% 6.3V X5R-CERM 01005 ROOM=NAND
C2629 18UF 20% 6.3V CER-X5R 0402-0.1MM ROOM=NAND
C2630 18UF 20% 6.3V CER-X5R 0402-0.1MM ROOM=NAND
C2624 4UF 20% 4V X5R 0201 ROOM=NAND
C2641 4UF
C2643 4UF
C2645 4UF
C2647 4UF
C2611 220PF 5% 10V C0G-CERM 01005 ROOM=NAND
C2617 100PF 5% 16V NP0-C0G 01005 ROOM=NAND
C2623 68PF 5% 6.3V NP0-C0G 01005 ROOM=NAND
C2612 47PF 5% 16V CERM 01005 ROOM=NAND
932mA MAX
PP0V9_NAND
C2602 26UF 20% 4V X5R 0402-0.1MM ROOM=NAND
C2605 26UF 20% 4V X5R 0402-0.1MM ROOM=NAND
C2600 4UF
C2601 4UF
C2622 4UF
C2627 4UF
C2640 4UF
C2642 4UF
C2644 4UF
C2646 4UF
C2603 220PF
C2606 220PF
C2609 100PF
C2614 68PF
C2620 47PF
C2628 22PF
1100mA MAX (1us peak power)
PP3V0_NAND
C2613 18UF
C2616 18UF
C2619 18UF
C2621 18UF
C2649 4UF 20% 6.3V CERM-X5R 0201 ROOM=NAND
C2650 4UF
C2651 4UF
C2652 4UF
C2615 22PF
C2618 47PF
C2631 68PF
C2632 100PF
C2634 220PF
C2635 220PF
C2636 220PF
C2637 100PF
NAND_ANI1_VREF
NAND_ANI0_VREF
PCI_AVDD_CLK_1
PCI_AVDD_CLK_2
PCI_AVDD_H
PCI_VDD_1
PCI_VDD_2
AVDD18_PLL
ANI0_VREF
ANI1_VREF
VDD
VDDIO
VCC
VDD_PLL
VPP
NC
U2600
THGBX7G8D2LLFXG
WFLGA
ROOM=NAND
BOMOPTION=OMIT_TABLE
CRITICAL
AP_TO_NAND_SYS_CLK
90_PCIE_AP_TO_NAND_REFCLK_P
90_PCIE_AP_TO_NAND_REFCLK_N
PCIE_NAND_BI_AP_CLKREQ_L
PCIE_NAND_RESREF
90_PCIE_AP_TO_NAND_TXD_P
90_PCIE_AP_TO_NAND_TXD_N
90_PCIE_NAND_TO_AP_RXD_P
90_PCIE_NAND_TO_AP_RXD_N
AP_TO_NAND_RESET_L
CLK_IN
PCIE_REFCLK_P
PCIE_REFCLK_M
PCIE_CLKREQ_N
PCI_RESREF
PCIE_RX0_P
PCIE_RX0_M
PCIE_TX0_P
PCIE_TX0_M
RESET*
TRST*
ZQ_C
ZQ_N
R2604 3.01K 1% 1/32W MF 01005 ROOM=NAND
Board trace <= 0.20hm
NAND_ZQ_C
NAND_ZQ_N
CKPLUS_WAIVE=MISS_P_DIFFPAIR
R2600 100 0.1% 1/32W MF 01005 ROOM=NAND
R2601 300 0.1% 1/32 MF 01005 ROOM=NAND
VSS
EXT_D0/BOOT0
EXT_D1/BOOT1
EXT_D2/BOOT2/SPINAND_SCLK
EXT_D3/SWD_UID0/SPINAND_MISO
EXT_D4/UART_RX
EXT_D5/SWD_UID1/SPINAND_MOSI
EXT_D6/UART_TX
EXT_D7/SPF
EXT_NCE/PERST*
EXT_NRE/JTAG_TMS
EXT_NWE/JTAG_TCK
EXT_RNB/JTAG_TDO
EXT_CLE/JTAG_TDI
EXT_ALE/JTAG_SEL
DROOP_N
WP_N
PMU_TO_NAND_LOW_BATT_BOOT_L
AP_TO_NAND_FW_STRAP
SPI_AP_TO_S4E_SCLK_BOOT_CONFIG0
SPI_S4E_TO_AP_MISO_BOOT_CONFIG2
SPI_AP_TO_S4E_MOSI_BOOT_CONFIG1
SYSTEM_ALIVE
PCIE_AP_TO_NAND_RESET_L
SWD_AP_BI_NAND_SWDIO
SWD_AOP_TO_MANY_SWCLK
PP1V8_IO

PAGE TITLE

NAND

Apple Inc.

DRAWING NUMBER 051-02221

SIZE D

REVISION

BRANCH evt-1

PAGE 26 OF 80

SHEET 16 OF 51

NOTICE OF PROPRIETARY PROPERTY:

THE INFORMATION CONTAINED HEREIN IS THE PROPRIETARY PROPERTY OF APPLE INC. THE POSESSOR AGREES TO THE FOLLOWING:

I TO MAINTAIN THIS DOCUMENT IN CONFIDENCE
II NOT TO REPRODUCE OR COPY IT
III NOT TO REVEAL OR PUBLISH IT IN WHOLE OR PART
IV ALL RIGHTS RESERVED

迅维职业技能培训中心
400-800-9990
CHINAFIX

8
7
6
5
4
3
2
1
D
C
B
A
U2700
D2422B0
WLCSP
SYM 2 OF 5
ROOM=PMU
CRITICAL
BUCK4
4.9A MAX
PP1V1_S2
C2745 26UF
C2744 26UF
C2743 26UF
C2742 26UF
C2741 26UF
C2740 220PF
(Place in TTS)
L2740
1UH-20%-3.2A-0.060HM
PIWA20160H-SM
BUCK4_LX0
CRITICAL
L2741
0.47UH-20%-3.3A-0.0530HM
PIWA2012FE-SM
BUCK4_LX1
OMIT
XW2740
SHORT-20L-0.05MM-SM
BUCK4_FB
V11
W11
Y11
V9
W9
Y9
T8
BUCK4_LX0
BUCK4_LX1
BUCK4_FB
BUCK5
1.7A MAX
PP0V8_SOC_FIXED_S1
C2752 26UF
C2751 26UF
C2750 220PF
L2750
1UH-20%-2.5A-0.0520HM
BUCK5_LX0
OMIT
XW2750
SHORT-20L-0.05MM-SM
BUCK5_FB
V3
W3
Y3
T4
BUCK5_LX0
BUCK5_FB
BUCK6
1.2A MAX
PP1V25_S2
C2763 15UF
C2762 15UF
C2761 15UF
C2760 220PF
(Place Close to Ansel)
CRITICAL
L2760
1UH-20%-2.4A-0.060HM
PIWA2016FE-SM
BUCK6_LX0
OMIT
XW2760
SHORT-20L-0.05MM-SM
BUCK6_FB
H1
H2
H4
BUCK6_LX0
BUCK6_FB
BUCK7
2.1A MAX
0.80V - 1.06V
PP_CPU_SRAM
C2772 26UF
C2771 26UF
C2770 220PF
L2770
1UH-20%-2.5A-0.0520HM
BUCK7_LX0
OMIT
XW2770
SHORT-20L-0.05MM-SM
BUCK7_FB
W16
W17
W18
W14
BUCK7_LX0
BUCK7_FB
BUCK8
1.2A MAX
0.80V - 0.92V
PP_GPU_SRAM
C2782 26UF
C2781 26UF
C2780 220PF
CRITICAL
L2780
1UH-20%-2.5A-0.0780HM
PIWA20120H-SM
BUCK8_LX0
OMIT
XW2780
SHORT-20L-0.05MM-SM
BUCK8_FB
A17
B17
E17
BUCK8_LX0
BUCK8_FB
BUCK9
1.2A MAX
PP_DCS_S1
C2792 26UF
C2791 26UF
C2790 220PF
CRITICAL
L2790
1UH-20%-2.1A-0.10HM
PIWA2012FE-SM
BUCK9_LX
OMIT
XW2790
SHORT-20L-0.05MM-SM
BUCK9_FB
A6
B6
F4
BUCK9_LX0
BUCK9_FB
BUCK0_LX0
L17
L18
CRITICAL
L2700
1UH-20%-3.2A-0.060HM
PIWA20160H-SM
BUCK0_LX0
0.625V - 1.06V
PP_CPU_PCORE
C2700 220PF
C2701 26UF
C2702 26UF
C2703 26UF
C2704 26UF
C2705 26UF
C2706 26UF
BUCK0
13.8A MAX
BUCK0_LX1
N16
N17
N18
CRITICAL
L2701
0.47UH-20%-3.3A-0.0530HM
PIWA2012FE-SM
BUCK0_LX1
BUCK0_LX2
R16
R17
R18
CRITICAL
L2702
0.1UH-20%-6.1A-0.0310HM
PINA1608-SM
BUCK0_LX2
BUCK0_LX3
U16
U17
U18
CRITICAL
L2703
0.1UH-20%-6.1A-0.0310HM
PINA1608-SM
BUCK0_LX3
BUCK0_FB
R13
BUCK0_FB
IN
BUCK1_LX0
A15
B15
CRITICAL
L2710
1UH-20%-3.6A-0.0620HM
0806
BUCK1_LX0
0.67V - 0.92V
1.03V for overdrive only
PP_GPU
C2710 220PF
C2711 26UF
C2712 26UF
C2713 26UF
C2714 26UF
C2715 26UF
C2716 26UF
BUCK1
13.8A MAX
BUCK1_LX1
A13
B13
C13
L2711
0.47UH-20%-4A-0.0480HM
PIWA20120H-SM
BUCK1_LX1
BUCK1_LX2
A11
B11
C11
CRITICAL
L2712
0.1UH-20%-7.2A-0.0180HM
PINA2012-SM
BUCK1_LX2
BUCK1_LX3
A9
B9
C9
NC
NC
NC
BUCK1_FB
F15
BUCK1_FB
IN
BUCK2_LX0
V5
W5
Y5
CRITICAL
L2720
1UH-20%-3.2A-0.060HM
PIWA20160H-SM
BUCK2_LX0
0.67V/0.88V
PP_SOC_S1
C2720 220PF
C2721 26UF
C2722 26UF
C2723 26UF
C2724 26UF
(Place in TTS)
BUCK2
4.9A MAX
BUCK2_LX1
V7
W7
Y7
CRITICAL
L2721
0.47UH-20%-3.3A-0.0530HM
PIWA2012FE-SM
BUCK2_LX1
BUCK2_FB
T7
BUCK2_FB
IN
BUCK3_LX0
F1
F2
L2730
1UH-20%-2.4A-0.060HM
PIWA2016FE-SM
BUCK3_LX0
OMIT
XW2730
SHORT-20L-0.05MM-SM
BUCK3_FB
G4
BUCK3_FB
PP1V8_S2
C2730 220PF
C2731 15UF
C2732 15UF
BUCK3
1.7A MAX
VBUCK3_SW
C1
C2
SWITCH OUTPUTS
BUCK3_SW1
A2
B1
B2
PP1V8_IO
BUCK3_SW2
BUCK3_SW3
D1
D2
PP1V8_TOUCH_RACER_S2
PP1V8_IMU_S2
ROOM=PMU

PAGE TITLE
SYSTEM POWER: PMU Bucks (1/4)

DRAWING NUMBER 051-02221
SIZE D

Apple Inc.

NOTICE OF PROPRIETARY PROPERTY:
THE INFORMATION CONTAINED HEREIN IS THE PROPRIETARY PROPERTY OF APPLE INC.
THE POSESSOR AGREES TO THE FOLLOWING:
I TO MAINTAIN THIS DOCUMENT IN CONFIDENCE
II NOT TO REPRODUCE OR COPY IT
III NOT TO REVEAL OR PUBLISH IT IN WHOLE OR PART
IV ALL RIGHTS RESERVED

BRANCH evt-1
PAGE 27 OF 80
SHEET 17 OF 51

CHINAFIX
迅维职业技能培训中心
400-800-9990

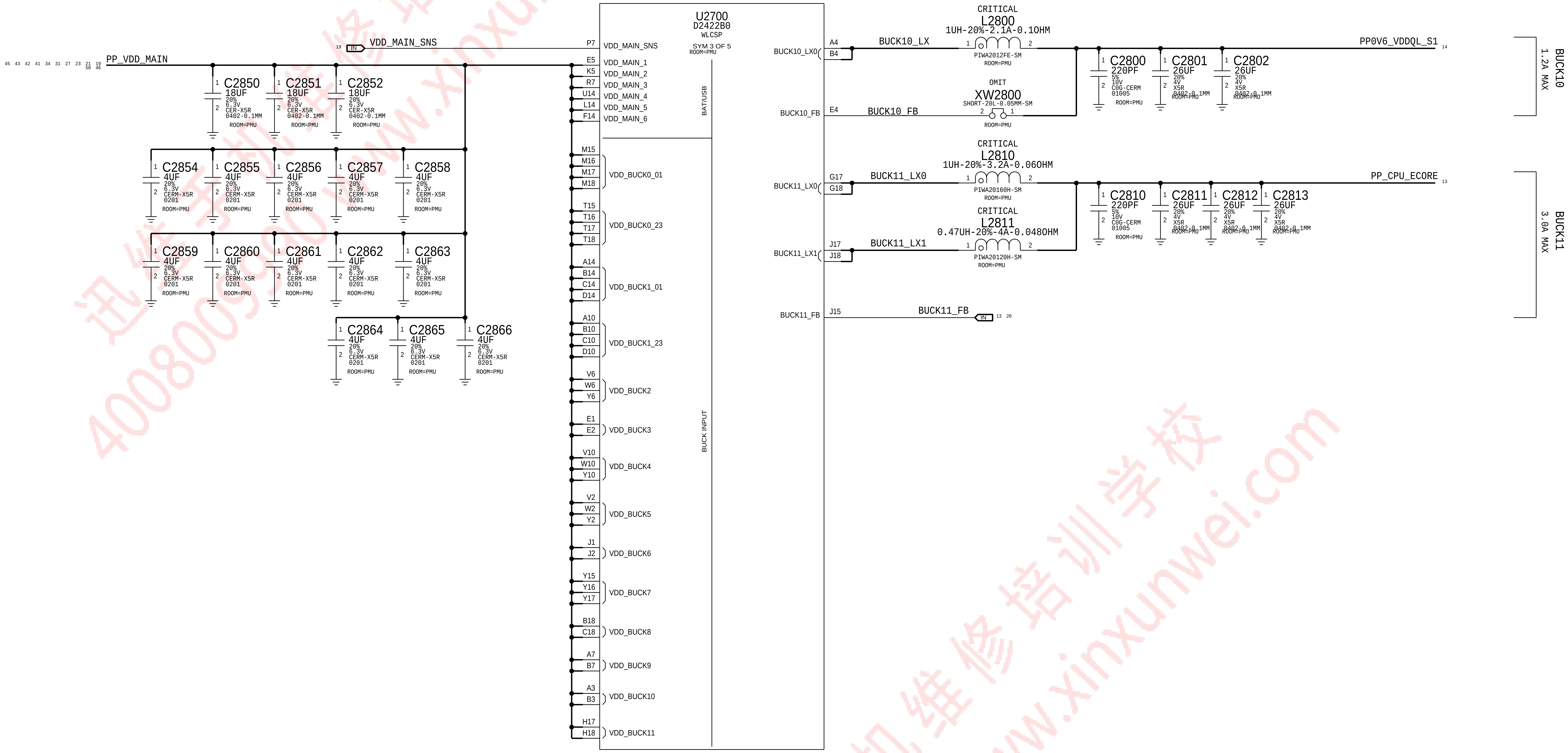
8 7 6 5 4 3 2 1
D C B A
45 43 42 41 34 31 27 23 21 19 50 46
PP_VDD_MAIN
19 IN VDD_MAIN_SNS
C2850 18UF 20% 6.3V CER-X5R 0402-0.1MM ROOM=PMU
C2851 18UF 20% 6.3V CER-X5R 0402-0.1MM ROOM=PMU
C2852 18UF 20% 6.3V CER-X5R 0402-0.1MM ROOM=PMU
C2854 4UF 20% 6.3V CERM-X5R 0201 ROOM=PMU
C2855 4UF 20% 6.3V CERM-X5R 0201 ROOM=PMU
C2856 4UF 20% 6.3V CERM-X5R 0201 ROOM=PMU
C2857 4UF 20% 6.3V CERM-X5R 0201 ROOM=PMU
C2858 4UF 20% 6.3V CERM-X5R 0201 ROOM=PMU
C2859 4UF 20% 6.3V CERM-X5R 0201 ROOM=PMU
C2860 4UF 20% 6.3V CERM-X5R 0201 ROOM=PMU
C2861 4UF 20% 6.3V CERM-X5R 0201 ROOM=PMU
C2862 4UF 20% 6.3V CERM-X5R 0201 ROOM=PMU
C2863 4UF 20% 6.3V CERM-X5R 0201 ROOM=PMU
C2864 4UF 20% 6.3V CERM-X5R 0201 ROOM=PMU
C2865 4UF 20% 6.3V CERM-X5R 0201 ROOM=PMU
C2866 4UF 20% 6.3V CERM-X5R 0201 ROOM=PMU
U2700 D2422B0 WLCSP
SYM 3 OF 5 ROOM=PMU
BAT/USB
BUCK INPUT
P7 VDD_MAIN_SNS
E5 VDD_MAIN_1
K5 VDD_MAIN_2
R7 VDD_MAIN_3
U14 VDD_MAIN_4
L14 VDD_MAIN_5
F14 VDD_MAIN_6
M15 M16 M17 M18 VDD_BUCK0_01
T15 T16 T17 T18 VDD_BUCK0_23
A14 B14 C14 D14 VDD_BUCK1_01
A10 B10 C10 D10 VDD_BUCK1_23
V6 W6 Y6 VDD_BUCK2
E1 E2 VDD_BUCK3
V10 W10 Y10 VDD_BUCK4
V2 W2 Y2 VDD_BUCK5
J1 J2 VDD_BUCK6
Y15 Y16 Y17 VDD_BUCK7
B18 C18 VDD_BUCK8
A7 B7 VDD_BUCK9
A3 B3 VDD_BUCK10
H17 H18 VDD_BUCK11
BUCK10_LX0 A4 B4
BUCK10_FB E4
BUCK11_LX0 G17 G18
BUCK11_LX1 J17 J18
BUCK11_FB J15
BUCK10_LX
CRITICAL L2800 1UH-20%-2.1A-0.1OHM PIWA2012FE-SM ROOM=PMU
BUCK10_FB
OMIT XW2800 SHORT-20L-0.05MM-SM ROOM=PMU
PP0V6_VDDQL_S1 14
C2800 220PF 5% 10V C0G-CERM 01005 ROOM=PMU
C2801 26UF 20% 4V X5R 0402-0.1MM ROOM=PMU
C2802 26UF 20% 4V X5R 0402-0.1MM ROOM=PMU
BUCK10 1.2A MAX
BUCK11_LX0
CRITICAL L2810 1UH-20%-3.2A-0.06OHM PIWA20160H-SM ROOM=PMU
BUCK11_LX1
CRITICAL L2811 0.47UH-20%-4A-0.048OHM PIWA20120H-SM ROOM=PMU
PP_CPU_ECORE 13
C2810 220PF 5% 10V C0G-CERM 01005 ROOM=PMU
C2811 26UF 20% 4V X5R 0402-0.1MM ROOM=PMU
C2812 26UF 20% 4V X5R 0402-0.1MM ROOM=PMU
C2813 26UF 20% 4V X5R 0402-0.1MM ROOM=PMU
BUCK11 3.0A MAX
BUCK11_FB IN 13 20

SYNC_MASTER=test_mlb
SYNC_DATE=10/13/2016

PAGE TITLE
SYSTEM POWER: PMU Bucks (2/4)

Apple Inc.

DRAWING NUMBER 051-02221
SIZE D
REVISION 9.0.0
BRANCH evt-1
PAGE 28 OF 80
SHEET 18 OF 51

NOTICE OF PROPRIETARY PROPERTY:

THE INFORMATION CONTAINED HEREIN IS THE PROPRIETARY PROPERTY OF APPLE INC.
THE POSESSOR AGREES TO THE FOLLOWING:

I TO MAINTAIN THIS DOCUMENT IN CONFIDENCE
II NOT TO REPRODUCE OR COPY IT
III NOT TO REVEAL OR PUBLISH IT IN WHOLE OR PART
IV ALL RIGHTS RESERVED

CHINAFIX
迅维职业技能培训中心
400-800-9990

PP_VDD_MAIN
43 42 41 34 31 27 23 21 19 18 50 46 45
VDD_MAIN_SNS
18 OUT
XW2990
OMIT
SHORT-20L-0.05MM-SM
ROOM=PMU
PMU_PRE_UVLO_DET
20 OUT
XW2991
OMIT
SHORT-20L-0.05MM-SM
ROOM=PMU
C2990 18UF 20% 6.3V CER-X5R 0402-0.1MM ROOM=PMU
C2991 18UF 20% 6.3V CER-X5R 0402-0.1MM ROOM=PMU
C2992 18UF 20% 6.3V CER-X5R 0402-0.1MM ROOM=PMU
PP_VDD_BOOST
50 38 34 27 21 19
PMU_LDO5_UVLO_DET
20 OUT
XW2995
OMIT
SHORT-20L-0.05MM-SM
ROOM=PMU
OMIT_TABLE C2970 2.2UF 20% 6.3V X5R-CERM 0201 ROOM=CAM_PMU
OMIT_TABLE C2971 2.2UF 20% 6.3V X5R-CERM 0201 ROOM=CAM_PMU
U2700
D2422B0
WLCSP
SYM 5 OF 5
ROOM=PMU
VSS
VSS
A1 A12 A16 A18 A5 A8 B12 B16 B5 B8 C12 C15 C16 C17 C3 C4 C5 C6 C7 C8 D11 D12 D13 D15 D16 D17 D18 D8 D9 E11 E12 E13 E18 E3 F16 F17 F18 F3 F5 G1 G15 G16 G2 G3 G5 H16 H3 H5 J13 J14 J16 J5 K14 K16
K17 K18 L16 L6 M7 M11 N7 N15 N8 N9 P10 P11 P15 P16 P17 P18 P8 P9 R15 R8 T3 T5 T6 T9 U10 U11 U12 U15 U3 U4 U5 U6 U7 U8 U9 V12 V15 V16 V17 V18 V4 V8 N12 W12 W15 W4 W8 Y1 Y12 Y13 Y14 Y18 Y4 Y8
PMU_VSS_RTC 20
PP1V1_S2 42 17 14
OMIT_TABLE C2980 2.2UF 20% 6.3V X5R-CERM 0201 ROOM=PMU
OMIT_TABLE C2981 2.2UF 20% 6.3V X5R-CERM 0201 ROOM=PMU
PP1V25_S2 27 17
PP2V5_LDO0_S2 19
U2700
D2422B0
WLCSP
SYM 1 OF 5
ROOM=PMU
K4 VDD_LDO0
N4 VDD_LDO1
M4 VDD_LDO2
R5 VDD_LDO3
N1 VDD_LDO4
V1 VDD_LDO5
W1 VDD_LDO5
L1 VDD_LDO6
K1 VDD_BYPASS
M1 VDD_LDO7
R2 VDD_LDO8
M6 VDD_LDO9
R6 VDD_LDO10
R4 VDD_LDO11
L4 VDD_LDO12
R3 VDD_LDO13
T1 VDD_LDO14
M5 VDD_VBUF
J4 VCC_LDOG
E14 VPP_OTP
NC T14 TP_DET
LDO INPUT
LDO
VLDO0 K3
VLDO1 N3
VLDO2 M3
VLDO3 P5
VLDO4 N2
VLDO5 U1
VLDO6 L2
VBYPASS K2
VLDO7 M2
VLDO8 P2
VLDO9 N6
VLDO10 P6
VLDO11 P4
VLDO12 L3 NC
VLDO13 P3
VLDO14 T2
VBUF_1V2 N5
VPUMP D3
PP2V5_LDO0_S2 19
PP3V3_USB 6
PP1V8_AUDIO_VA_S2 38 41 50
PP3V0_CONVOY
PP0V7_VDD_LOW_S2 13
PP3V0_NAND 16
PP_ACC_VAR 46 48
PP3V0_S2 36 45 47 48 50
PP0V9_NAND 16
PP1V8_ALWAYS 20 23
PP3V0_DISPLAY 43
PP1V2_SOC 7 9 13 14
PP1V2_CODEC_S2 38
PP1V0_DISPLAY_DVDD 43
PP1V2_LPADC 14
LDO1
LDO2
LDO3
LDO4
LDO5
LDO6
LDO7
LDO8
LDO9
LDO10
LDO11
LDO12
LDO13
LDO14
VBUF_1V2
PMU_VPUMP
C2920 47NF 20% 6.3V X5R-CERM 01005 ROOM=PMU
OMIT_TABLE C2901 2.2UF 20% 6.3V X5R-CERM 0201 ROOM=PMU
OMIT_TABLE C2906 2.2UF 20% 6.3V X5R-CERM 0201 ROOM=PMU
C2909 1.0UF 20% 6.3V X5R 0201-1 ROOM=PMU
OMIT_TABLE C2911 2.2UF 20% 6.3V X5R-CERM 0201 ROOM=PMU
OMIT_TABLE C2913 2.2UF 20% 6.3V X5R-CERM 0201 ROOM=PMU
OMIT_TABLE C2900 2.2UF 20% 6.3V X5R-CERM 0201 ROOM=PMU
OMIT_TABLE C2903 2.2UF 20% 6.3V X5R-CERM 0201 ROOM=PMU
OMIT_TABLE C2907 2.2UF 20% 6.3V X5R-CERM 0201 ROOM=PMU
OMIT_TABLE C2910 2.2UF 20% 6.3V X5R-CERM 0201 ROOM=PMU
OMIT_TABLE C2914 2.2UF 20% 6.3V X5R-CERM 0201 ROOM=PMU
C2915 0.22UF 20% 6.3V X5R 01005-1 ROOM=PMU
8 7 6 5 4 3 2 1
D C B A

VPUMP: 10nF min. @4.6V

SYNC_MASTER=test_mlb

SYNC_DATE=10/13/2016

PAGE TITLE
SYSTEM POWER: PMU LDOs (3/4)

Apple Inc.

DRAWING NUMBER	SIZE
051-02221	D

REVISION
9.0.0

BRANCH
evt-1

PAGE
29 OF 80

SHEET
19 OF 51

NOTICE OF PROPRIETARY PROPERTY:

THE INFORMATION CONTAINED HEREIN IS THE PROPRIETARY PROPERTY OF APPLE INC.
THE POSESSOR AGREES TO THE FOLLOWING:

I TO MAINTAIN THIS DOCUMENT IN CONFIDENCE
II NOT TO REPRODUCE OR COPY IT
III NOT TO REVEAL OR PUBLISH IT IN WHOLE OR PART
IV ALL RIGHTS RESERVED

Ansel AMUX
CAMPMU_TO_PMU_AMUX
C3071 1000PF 10% 10V X5R 01005
COLD_RESET & SYSTEM_ALIVE
PP1V8_S2
R3061 100K 5% 1/32W MF 01005
R3062 100K 5% 1/32W MF 01005
SYSTEM_ALIVE
PMU_TO_SYSTEM_COLD_RESET_L
R3000 100 1% 1/32W MF 01005
NTCs
FOREHEAD NTC
C3041 100PF 5% 16V NP0-C0G 01005
R3041 10KOHM-1% 01005
FOREHEAD_NTC
FOREHEAD_NTC_RETURN
OMIT XW3041 SHORT-20L-0.05MM-SM
REAR CAMERA NTC
C3042 100PF
R3042 10KOHM-1% 01005
REAR_CAMERA_NTC
RCAM_NTC_RETURN
OMIT XW3042 SHORT-20L-0.05MM-SM
RADIO PA NTC on MLB Bottom
AP NTC
C3044 100PF
R3044 10KOHM-1% 01005
AP_NTC
AP_NTC_RETURN
OMIT XW3044 SHORT-20L-0.05MM-SM
CHARGER NTC
C3045 100PF
R3045 10KOHM-1% 01005
CHARGER_NTC
CHARGER_NTC_RETURN
OMIT XW3045 SHORT-20L-0.05MM-SM
NOTE:100PF CAPS ARE THE SAMPLING CAPS FOR PMU ADC
R3011 200K 1% 1/32W MF 01005
PMU_AMUX_AY
C3020 100PF 5% 16V NP0-C0G 01005
R3020 3.92K 0.1% 1/20W MF 0201
PMU_TCAL
PP1V8_ALWAYS
R3001 0.00 0% 1/32W MF 01005
PP1V8_ALWAYS_XO
C3002 0.1UF 20% 6.3V X5R-CERM 01005
Y3000 32.768KHZ-10PPM CSP CRITICAL
VDD CLKOUT GND NC
PMU_VSS_RTC
XW3000 SHORT-20L-0.05MM-SM OMIT
C3030 0.22UF 20% 6.3V X5R 0201
C3031 1UF 20% 6.3V X5R 0201
PMU_VDD_RTC
PMU_VDD_REF
TCXO_PMU_32K
CRITICAL U2700 D2422B0 WLCSP SYM 4 OF 5 ROOM=PMU
RESETS REFS COMPARATOR ADC AMUX BUTTONS NTC GPIO XTAL
AP_TO_PMU_WDOG_RESET P13 RESET_IN1
HYDRA_TO_PMU_HOST_RESET P12 RESET_IN2
AP_TO_PMU_SOCHOT_L N13 RESET_IN3
PMU_TO_SYSTEM_COLD_RESET_L R12 RESET*
NC H15 SHDN
PMU_TO_AP_HYDRA_ACTIVE_READY M12 ACTIVE_RDY
PMU_TO_AOP_CLK32K G6 SLEEP_32K
PMU_TO_TOUCH_CLK32K_RESET_L H6 OUT_32K
SYSTEM_ALIVE_R K13 SYS_ALIVE
AP_TO_MANY_BSYNC M13 FORCE_SYNC
PMU_TO_SEP_DOUBLE_CLICK_DET L12 DBL_CLICK_DET
PMU_TO_AOP_IRQ_L N14 IRQ*
I2C0_AP_SCL M8 SCL
I2C0_AP_SDA L8 SDA
SPMI_PMGR_TO_PMU_SCLK K7 SCLK
SPMI_PMU_BI_PMGR_SDATA L7 SDATA
AP_TO_PMU_AMUX_OUT D4 AMUX_A0
NC D5 AMUX_A1
CAMPMU_TO_PMU_AMUX D6 AMUX_A2
NC D7 AMUX_A3
NC F9 AMUX_A4
HYDRA_TO_PMU_USB_BRICK_ID F10 AMUX_A5
NC E6 AMUX_A6
ACC_BUCK_TO_PMU_AMUX E7 AMUX_A7
PMU_AMUX_AY E8 AMUX_AY
ACORN_TO_PMU_ADC F6 AMUX_B0
AP_TO_PMU_AMUX_SYNC G7 AMUX_B1
DISPLAY_TO_PMU_AMUX G8 AMUX_B2
TOUCH_TO_AMUX_PP1V8 F7 AMUX_B3
PMU_TO_WLAN_CLK32K E9 AMUX_B4
RIGEL_TO_ISP_INT E10 AMUX_B5
AP_TO_PMU_TEST_CLKOUT F8 AMUX_B6
NC H7 AMUX_B7
PMU_AMUX_BY H8 AMUX_BY
FOREHEAD_NTC T12 TDEV1
REAR_CAMERA_NTC T13 TDEV2
RADIO_PA_NTC U13 TDEV3
AP_NTC V13 TDEV4
CHARGER_NTC W13 TDEV5
PMU_TCAL V14 TCAL
PMU_VSS_RTC R1 XTAL1
TCXO_PMU_32K P1 XTAL2
PMU_VDD_RTC L5 VDD_RTC
PMU_VDD_REF J3 VDD_REF
IREF R10 PMU_IREF
VREF R9 PMU_VREF
R3010 200K 1% 1/20W MF 201
C3010 0.22UF 20% 6.3V X5R 0201
PRE_UVLO M14 PMU_TO_AP_PRE_UVLO_L
VDROOP0 P14 PMU_TO_AP_THROTTLE_PCORE_L
VDROOP1 E16 PMU_TO_AP_THROTTLE_GPU0_L
VDROOP11 L15 PMU_TO_AP_THROTTLE_ECORE_L
VDROOP0_DET R14 AP_CPU_PCORE_SENSE
VDROOP1_DET E15 AP_VDD_GPU_SENSE
VDROOP11_DET K15 BUCK11_FB
PRE_UVLO_DET L13 PMU_PRE_UVLO_DET
LDO5_UVLO_DET U2 PMU_LDO5_UVLO_DET
IBAT T11 NC
VBAT T10 NC
BRICK_ID1 N11 HYDRA_TO_PMU_USB_BRICK_ID
BRICK_ID2 N10 NC
ADC_IN R11 ACORN_TO_PMU_ADC
PP1V8_ALWAYS
R3074 NOSTUFF 31.6K 1% 1/32W MF 01005
BUTTON1 G14 BUTTON_VOL_DOWN_L
BUTTON2 H14 BUTTON_POWER_KEY_L
BUTTON3 F13 BUTTON_VOL_UP_L
BUTTON4 G13 BUTTON_RINGER_A
BUTTONO1 K6 PMU_TO_AP_BUTTON_VOL_DOWN_L
BUTTONO2 J7 PMU_TO_AP_BUTTON_POWER_KEY_L
BUTTONO3 J6 PMU_TO_AP_BUTTON_VOL_UP_L
GPIO1 F11 PMU_TO_NFC_EN_R
GPIO2 F12 PMU_TO_AP_THROTTLE_GPU1_L
GPIO3 G9 TIGRIS_TO_PMU_INT_L
GPIO4 G10 WLAN_TO_PMU_HOST_WAKE
GPIO5 G11 NFC_TO_PMU_HOST_WAKE
GPIO6 G12 NC
GPIO7 H9 PMU_TO_GNSS_EN_R
GPIO8 H10 PMU_TO_WLAN_CLK32K
GPIO9 H11 PMU_TO_BT_REG_ON
GPIO10 H12 BT_TO_PMU_HOST_WAKE
GPIO11 J8 CODEC_TO_PMU_WAKE
GPIO12 J9 NC
GPIO13 J10 NC
GPIO14 J11 PMU_TO_WLAN_REG_ON
GPIO15 J12 PMU_TO_BB_USB_VBUS_DETECT
GPIO16 K8 NC
GPIO17 K9 PMU_TO_AP_FORCE_DFU_R
GPIO18 K10 PMU_TO_CCG2_RESET_L
GPIO19 K11 PMU_TO_BBPMU_RESET_R_L
GPIO20 K12 PMU_TO_NAND_LOW_BATT_BOOT_L
GPIO21 L9 BB_TO_PMU_PCIE_HOST_WAKE_L
GPIO22 L10 PMU_TO_IKTARA_EN_EXT_1P8V
GPIO23 L11 PMU_TO_BOOST_EN
GPIO24 M9 PMU_TO_DISPLAY_PANICB
GPIO25 M10 NC
FAULT_OUT* H13 PMU_TO_IKTARA_RESET_L
R3073 100 5% 1/32W MF 01005
PMU_TO_NFC_EN
R3072 100 5% 1/32W MF 01005
PMU_TO_GNSS_EN
R3071 20.0K 5% 1/32W MF 01005
PMU_HYDRA_TO_AP_FORCE_DFU
R3070 1.00K 5% 1/32W MF 01005
PMU_TO_BBPMU_RESET_L

PAGE TITLE
SYSTEM POWER: PMU (4/4)

Apple Inc.

DRAWING NUMBER 051-02221
SIZE D
REVISION [illegible]
BRANCH evt-1
PAGE 30 OF 80
SHEET 20 OF 51

NOTICE OF PROPRIETARY PROPERTY:

THE INFORMATION CONTAINED HEREIN IS THE PROPRIETARY PROPERTY OF APPLE INC.
THE POSESSOR AGREES TO THE FOLLOWING:

I TO MAINTAIN THIS DOCUMENT IN CONFIDENCE
II NOT TO REPRODUCE OR COPY IT
III NOT TO REVEAL OR PUBLISH IT IN WHOLE OR PART
IV ALL RIGHTS RESERVED

Boost Enable Pull

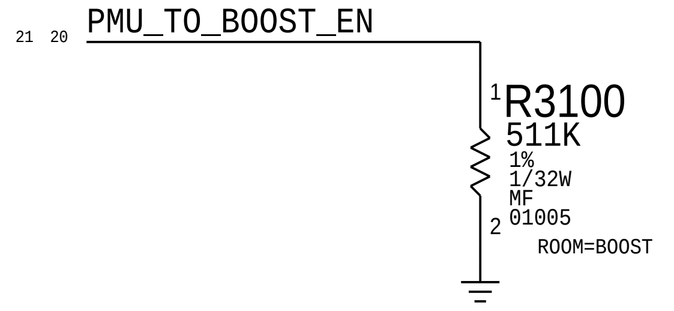
21 20
PMU_TO_BOOST_EN
1
R3100
511K
1%
1/32W
MF
01005
2
ROOM=BOOST

BOOST

353S01124

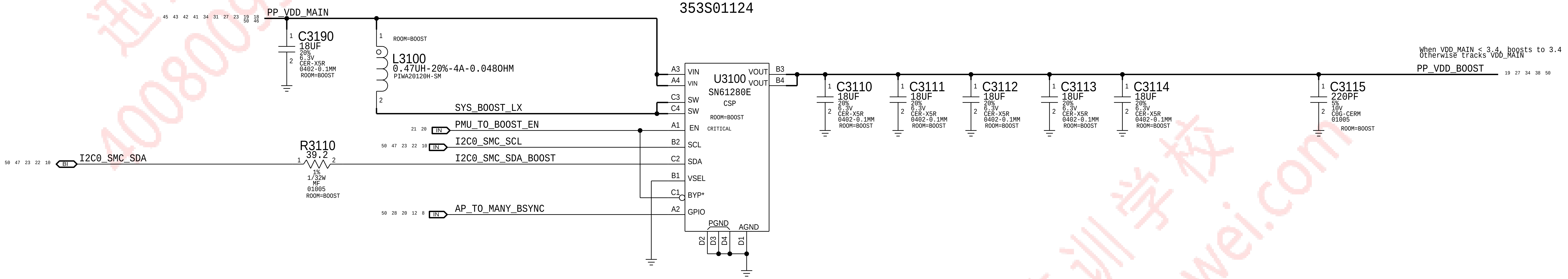
45 43 42 41 34 31 27 23 19 18 50 46
PP_VDD_MAIN
C3190
18UF
20%
6.3V
CER-X5R
0402-0.1MM
ROOM=BOOST
ROOM=BOOST
L3100
0.47UH-20%-4A-0.048OHM
PIWA20120H-SM
SYS_BOOST_LX
21 20 IN PMU_TO_BOOST_EN
50 47 23 22 10 IN I2C0_SMC_SCL
I2C0_SMC_SDA_BOOST
50 47 23 22 10 BI I2C0_SMC_SDA
R3110
39.2
1%
1/32W
MF
01005
ROOM=BOOST
50 28 20 12 8 IN AP_TO_MANY_BSYNC
U3100
SN61280E
CSP
ROOM=BOOST
CRITICAL
A3 VIN
A4 VIN
C3 SW
C4 SW
A1 EN
B2 SCL
C2 SDA
B1 VSEL
C1 BYP*
A2 GPIO
PGND
AGND
D2 D3 D4 D1
VOUT B3
VOUT B4
C3110
C3111
C3112
C3113
C3114
18UF
20%
6.3V
CER-X5R
0402-0.1MM
ROOM=BOOST
C3115
220PF
5%
10V
C0G-CERM
01005
ROOM=BOOST
When VDD_MAIN < 3.4, boosts to 3.4
Otherwise tracks VDD_MAIN
PP_VDD_BOOST
19 27 34 38 50

SYNC_MASTER=test_mlb SYNC_DATE=10/13/2016

PAGE TITLE

SYSTEM POWER: Boost

Apple Inc.

DRAWING NUMBER	SIZE
051-02221	D

REVISION
9.0.0

BRANCH
evt-1

PAGE
31 OF 80

SHEET
21 OF 51

NOTICE OF PROPRIETARY PROPERTY:

THE INFORMATION CONTAINED HEREIN IS THE PROPRIETARY PROPERTY OF APPLE INC.
THE POSESSOR AGREES TO THE FOLLOWING:

I TO MAINTAIN THIS DOCUMENT IN CONFIDENCE
II NOT TO REPRODUCE OR COPY IT
III NOT TO REVEAL OR PUBLISH IT IN WHOLE OR PART
IV ALL RIGHTS RESERVED

迅维手机维修培训学校
迅维手机维修培训学校
迅维职业技能培训中心
400-800-9990

BATTERY CONNECTOR

Rcpt: 516S00232 <-- This one on MLB
Plug: 516S00233

Gas gauge I2C level translator

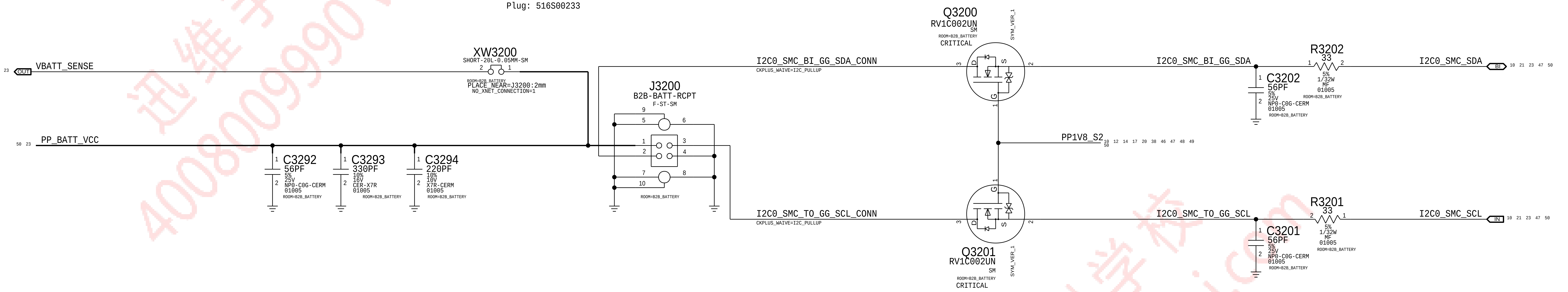
23 OUT VBATT_SENSE
XW3200
SHORT-20L-0.05MM-SM
2 1
ROOM=B2B_BATTERY
PLACE_NEAR=J3200:2mm
NO_XNET_CONNECTION=1
50 23 PP_BATT_VCC
C3292
56PF
5%
25V
NP0-C0G-CERM
01005
ROOM=B2B_BATTERY
C3293
330PF
10%
16V
CER-X7R
01005
ROOM=B2B_BATTERY
C3294
220PF
10%
10V
X7R-CERM
01005
ROOM=B2B_BATTERY
J3200
B2B-BATT-RCPT
F-ST-SM
ROOM=B2B_BATTERY
I2C0_SMC_BI_GG_SDA_CONN
CKPLUS_WAIVE=I2C_PULLUP
I2C0_SMC_TO_GG_SCL_CONN
CKPLUS_WAIVE=I2C_PULLUP
Q3200
RV1C002UN
SM
ROOM=B2B_BATTERY
CRITICAL
SYM_VER_1
Q3201
RV1C002UN
SM
ROOM=B2B_BATTERY
CRITICAL
SYM_VER_1
PP1V8_S2 10 12 14 17 20 38 46 47 48 49 50
I2C0_SMC_BI_GG_SDA
I2C0_SMC_TO_GG_SCL
C3202
56PF
5%
25V
NP0-C0G-CERM
01005
ROOM=B2B_BATTERY
R3202
33
5%
1/32W
MF
01005
ROOM=B2B_BATTERY
C3201
56PF
5%
25V
NP0-C0G-CERM
01005
ROOM=B2B_BATTERY
R3201
33
5%
1/32W
MF
01005
ROOM=B2B_BATTERY
I2C0_SMC_SDA BI 10 21 23 47 50
I2C0_SMC_SCL IN 10 21 23 47 50

SYNC_MASTER=test_mlb SYNC_DATE=10/13/2016

PAGE TITLE
SYSTEM POWER: B2B Battery

Apple Inc.

DRAWING NUMBER	051-02221
SIZE	D
REVISION	9.0.0
BRANCH	evt-1
PAGE	32 OF 80
SHEET	22 OF 51

NOTICE OF PROPRIETARY PROPERTY:
THE INFORMATION CONTAINED HEREIN IS THE PROPRIETARY PROPERTY OF APPLE INC.
THE POSESSOR AGREES TO THE FOLLOWING:
I TO MAINTAIN THIS DOCUMENT IN CONFIDENCE
II NOT TO REPRODUCE OR COPY IT
III NOT TO REVEAL OR PUBLISH IT IN WHOLE OR PART
IV ALL RIGHTS RESERVED

TIGRIS2 CHARGER

TIGRIS_PMID1
TIGRIS_PMID2
DZ3300
BZT52C20LP
DFN1006
R3316
50K
C3316
4.7UF
C3317
4.7UF
C3310
4.7UF
C3311
4.7UF
C3312
220PF
C3313
220PF
C3314
220PF
C3315
220PF
C3320
4.7UF
C3322
220PF
C3323
220PF
C3324
220PF
C3325
220PF
PP_VBUS1_E75
C3301
1UF
C3302
220PF
C3303
220PF
C3304
220PF
PP_VBUS2_IKTARA
C3305
1UF
C3306
220PF
C3307
220PF
C3308
220PF
PP1V8_ALWAYS
R3330
100K
I2C0_SMC_SDA
I2C0_SMC_SCL
SYSTEM_ALIVE
HYDRA_TO_TIGRIS_VBUS1_VALID_L
TIGRIS_TO_PMU_INT_L
R3331
100
TIGRIS_TO_PMU_INT_R_L
TIGRIS_VBUS_DETECT
R3332
30.1K
USB_VBUS_DETECT
BATTERY_NTC
U3300
SN2500A1YEWR
WCSP
CRITICAL
PMID1
PMID2
VBUS1
VBUS2
SDA
SCL
SYS_ALIVE
VBUS1_VALID*
VBUS2_VALID*
INT*
VBUS1_DET
TEST
NTC
VDD_MAIN
VDD_MAIN5
LDO
BOOT
BUCK_SW
BATT
BATT_SNS
ACT_DIODE
HDQ_HOST
HDQ_GAUGE
AUX1
NC0
NC1
NC2
NC3
GND
AGND
PP_VDD_MAIN
C3390
18UF
C3391
18UF
TIGRIS_LDO
C3360
220PF
C3361
4UF
C3340
0.047UF
TIGRIS_BOOT
NO_XNET_CONNECTION
TIGRIS_LX
CRITICAL
L3340
0.47UH-6.8A-0.046OHM
TIGRIS_LX_MID
CRITICAL
L3341
0.47UH-6.8A-0.046OHM
C3341
220PF
C3342
220PF
C3343
330PF
CRITICAL
Q3350
CSD68841W
BGA
PP_BATT_VCC
VBATT_SENSE
TIGRIS_ACTIVE_DIODE
C3350
330PF
C3351
4UF
C3352
4UF
C3353
220PF
NOSTUFF
R3350
100K
R3360
10
PP_VBUS1_E75_RVP_R
PP_VBUS1_E75_RVP

BATTERY NTC

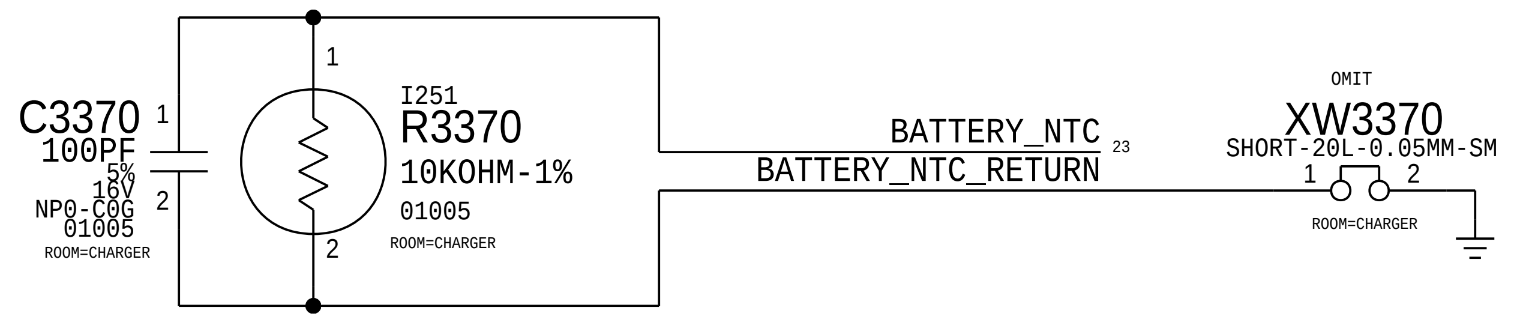
C3370
100PF
R3370
10KOHM-1%
01005
BATTERY_NTC
BATTERY_NTC_RETURN
OMIT
XW3370
SHORT-20L-0.05MM-SM

SYNC_MASTER=test_mlb
SYNC_DATE=10/13/2016

PAGE TITLE
SYSTEM POWER: Charger

DRAWING NUMBER 051-02221
SIZE D

Apple Inc.

REVISION 9.0.0

BRANCH evt-1

PAGE 33 OF 80

SHEET 23 OF 51

NOTICE OF PROPRIETARY PROPERTY:

THE INFORMATION CONTAINED HEREIN IS THE PROPRIETARY PROPERTY OF APPLE INC.
THE POSESSOR AGREES TO THE FOLLOWING:

I TO MAINTAIN THIS DOCUMENT IN CONFIDENCE
II NOT TO REPRODUCE OR COPY IT
III NOT TO REVEAL OR PUBLISH IT IN WHOLE OR PART
IV ALL RIGHTS RESERVED

迅维职业技能培训中心
400-800-9990

Iktara Components on MLB Bottom

PAGE TITLE
SYSTEM POWER: Iktara

Apple Inc.

DRAWING NUMBER	051-02221
SIZE	D
REVISION	9.0.0
BRANCH	evt-1
PAGE	34 OF 80
SHEET	24 OF 51

NOTICE OF PROPRIETARY PROPERTY:
THE INFORMATION CONTAINED HEREIN IS THE PROPRIETARY PROPERTY OF APPLE INC.
THE POSESSOR AGREES TO THE FOLLOWING:
I TO MAINTAIN THIS DOCUMENT IN CONFIDENCE
II NOT TO REPRODUCE OR COPY IT
III NOT TO REVEAL OR PUBLISH IT IN WHOLE OR PART
IV ALL RIGHTS RESERVED

Cyclone + Button Connnector

Rcpt: 516S00289 <-- This one on MLB
Plug: 516S00290

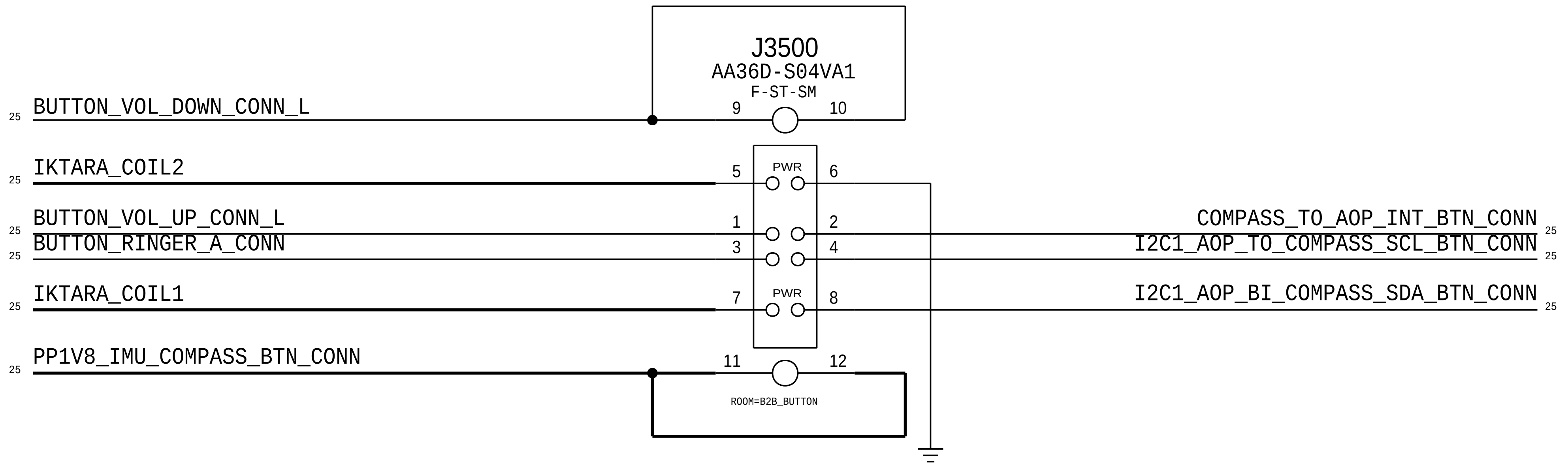
J3500
AA36D-S04VA1
F-ST-SM
BUTTON_VOL_DOWN_CONN_L
IKTARA_COIL2
BUTTON_VOL_UP_CONN_L
BUTTON_RINGER_A_CONN
IKTARA_COIL1
PP1V8_IMU_COMPASS_BTN_CONN
COMPASS_TO_AOP_INT_BTN_CONN
I2C1_AOP_TO_COMPASS_SCL_BTN_CONN
I2C1_AOP_BI_COMPASS_SDA_BTN_CONN
PWR
PWR
9 10 5 6 1 2 3 4 7 8 11 12
25
ROOM=B2B_BUTTON

Cyclone Filtering

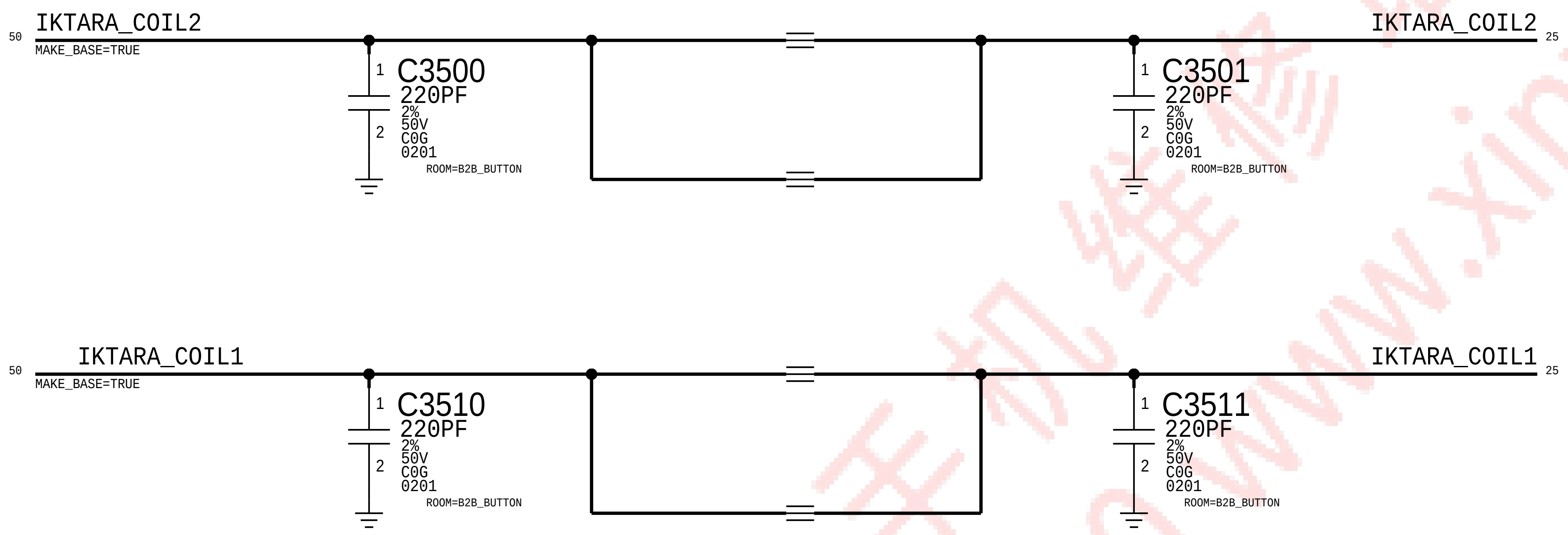
IKTARA_COIL2
MAKE_BASE=TRUE
IKTARA_COIL2
C3500
220PF
2%
50V
C0G
0201
ROOM=B2B_BUTTON
C3501
220PF
2%
50V
C0G
0201
ROOM=B2B_BUTTON
IKTARA_COIL1
MAKE_BASE=TRUE
IKTARA_COIL1
C3510
220PF
2%
50V
C0G
0201
ROOM=B2B_BUTTON
C3511
220PF
2%
50V
C0G
0201
ROOM=B2B_BUTTON
50
25

BUTTONS

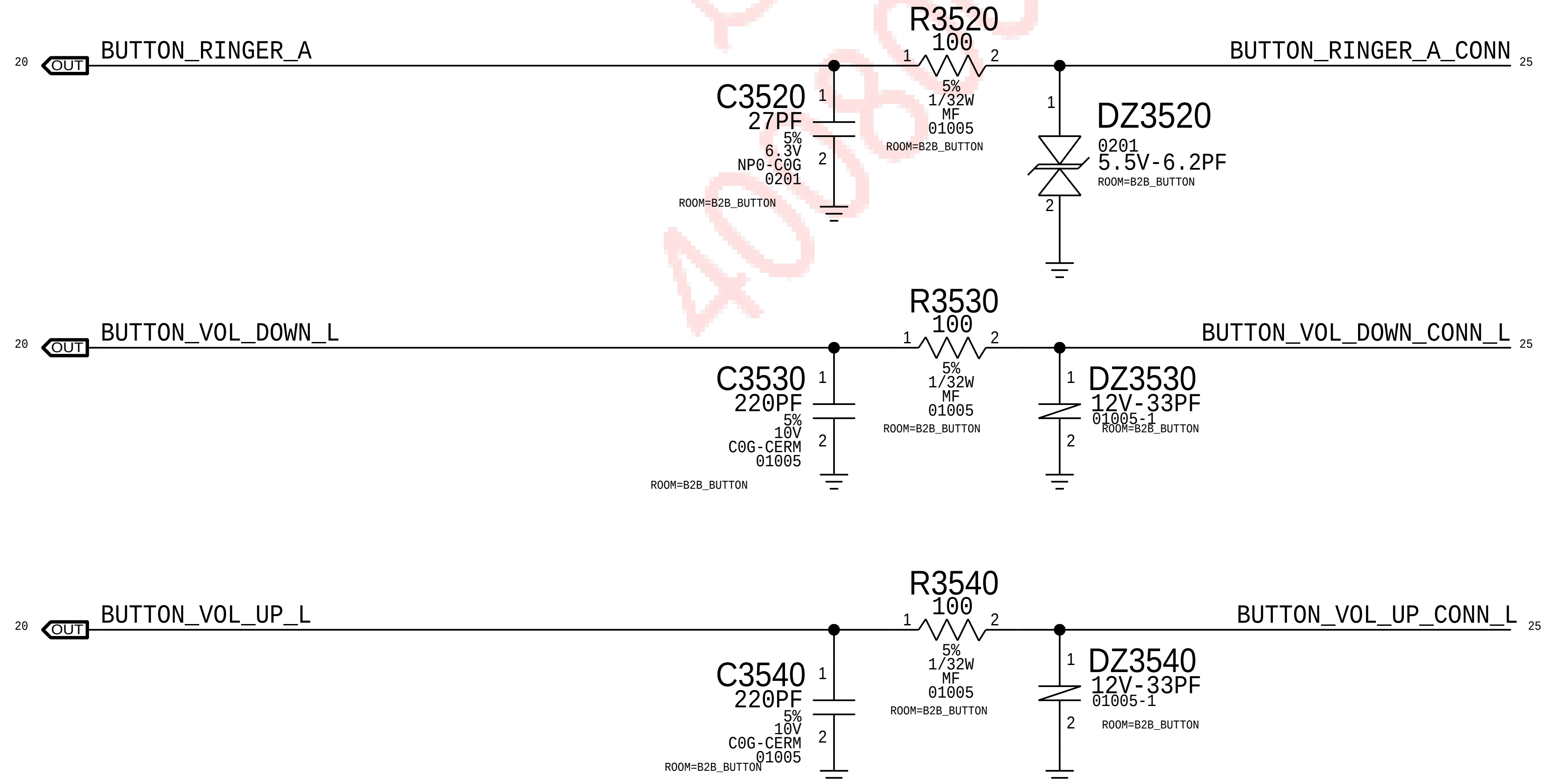
OUT
BUTTON_RINGER_A
R3520
100
5%
1/32W
MF
01005
ROOM=B2B_BUTTON
BUTTON_RINGER_A_CONN
C3520
27PF
5%
6.3V
NP0-C0G
0201
ROOM=B2B_BUTTON
DZ3520
0201
5.5V-6.2PF
ROOM=B2B_BUTTON
OUT
BUTTON_VOL_DOWN_L
R3530
100
5%
1/32W
MF
01005
ROOM=B2B_BUTTON
BUTTON_VOL_DOWN_CONN_L
C3530
220PF
5%
10V
C0G-CERM
01005
ROOM=B2B_BUTTON
DZ3530
12V-33PF
01005-1
ROOM=B2B_BUTTON
OUT
BUTTON_VOL_UP_L
R3540
100
5%
1/32W
MF
01005
ROOM=B2B_BUTTON
BUTTON_VOL_UP_CONN_L
C3540
220PF
5%
10V
C0G-CERM
01005
ROOM=B2B_BUTTON
DZ3540
12V-33PF
01005-1
ROOM=B2B_BUTTON
20
25

Compass (Button Flex Location)

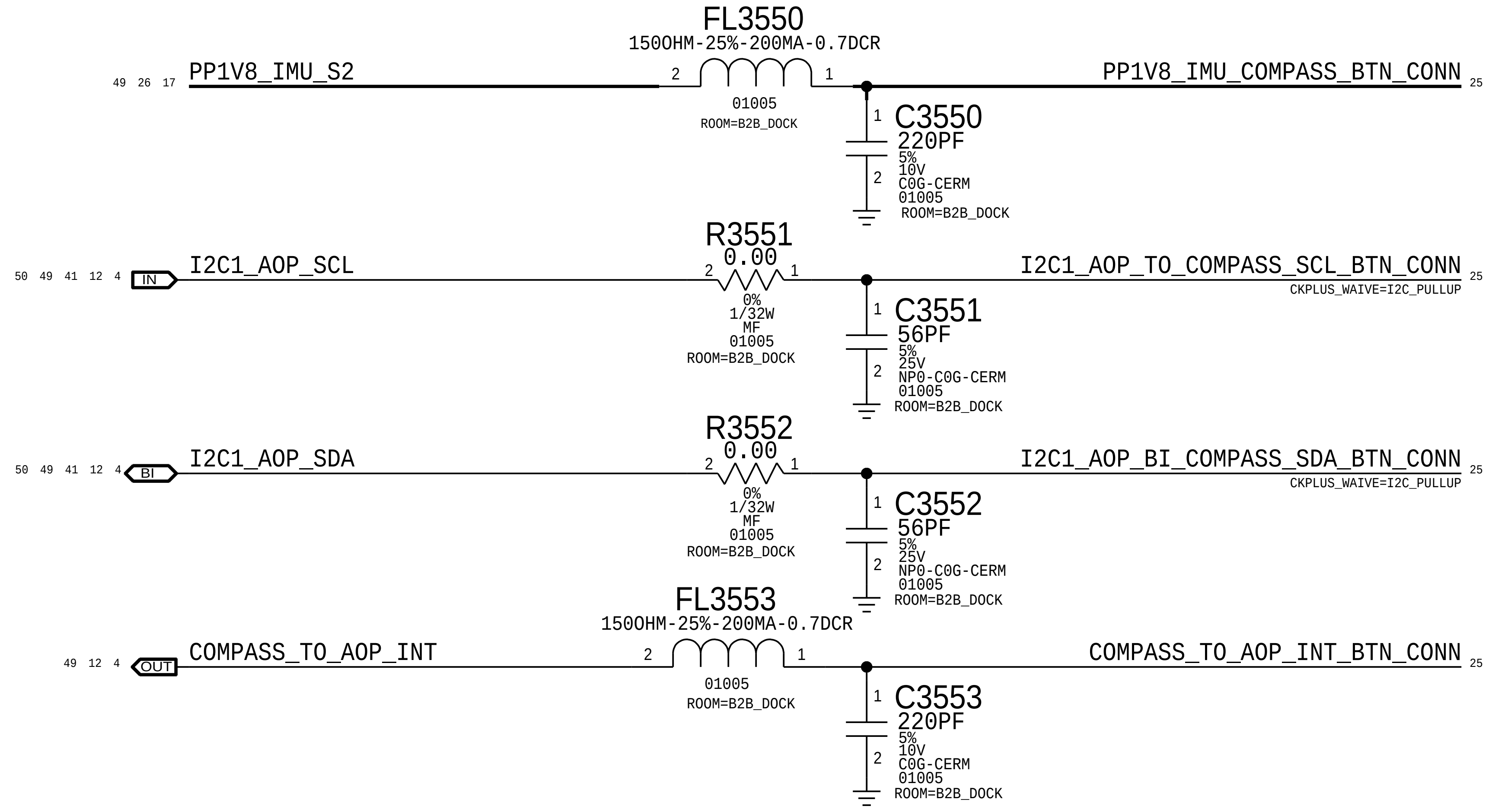
FL3550
150OHM-25%-200MA-0.7DCR
PP1V8_IMU_S2
49 26 17
01005
ROOM=B2B_DOCK
PP1V8_IMU_COMPASS_BTN_CONN
C3550
220PF
5%
10V
C0G-CERM
01005
ROOM=B2B_DOCK
R3551
0.00
0%
1/32W
MF
01005
ROOM=B2B_DOCK
50 49 41 12 4
IN
I2C1_AOP_SCL
I2C1_AOP_TO_COMPASS_SCL_BTN_CONN
CKPLUS_WAIVE=I2C_PULLUP
C3551
56PF
5%
25V
NP0-C0G-CERM
01005
ROOM=B2B_DOCK
R3552
0.00
0%
1/32W
MF
01005
ROOM=B2B_DOCK
50 49 41 12 4
BI
I2C1_AOP_SDA
I2C1_AOP_BI_COMPASS_SDA_BTN_CONN
CKPLUS_WAIVE=I2C_PULLUP
C3552
56PF
5%
25V
NP0-C0G-CERM
01005
ROOM=B2B_DOCK
FL3553
150OHM-25%-200MA-0.7DCR
49 12 4
OUT
COMPASS_TO_AOP_INT
01005
ROOM=B2B_DOCK
COMPASS_TO_AOP_INT_BTN_CONN
C3553
220PF
5%
10V
C0G-CERM
01005
ROOM=B2B_DOCK
25

SYNC_MASTER=test_mlb SYNC_DATE=10/13/2016

PAGE TITLE
SYSTEM POWER: B2B Cyclone + Button

DRAWING NUMBER	SIZE
051-02221	D

Apple Inc.

REVISION 9.0.0

BRANCH evt-1

PAGE 35 OF 80

SHEET 25 OF 51

NOTICE OF PROPRIETARY PROPERTY:

THE INFORMATION CONTAINED HEREIN IS THE PROPRIETARY PROPERTY OF APPLE INC. THE POSESSOR AGREES TO THE FOLLOWING:

I TO MAINTAIN THIS DOCUMENT IN CONFIDENCE
II NOT TO REPRODUCE OR COPY IT
III NOT TO REVEAL OR PUBLISH IT IN WHOLE OR PART
IV ALL RIGHTS RESERVED

Graphite - Accel & Gyro

APN: 338S00304

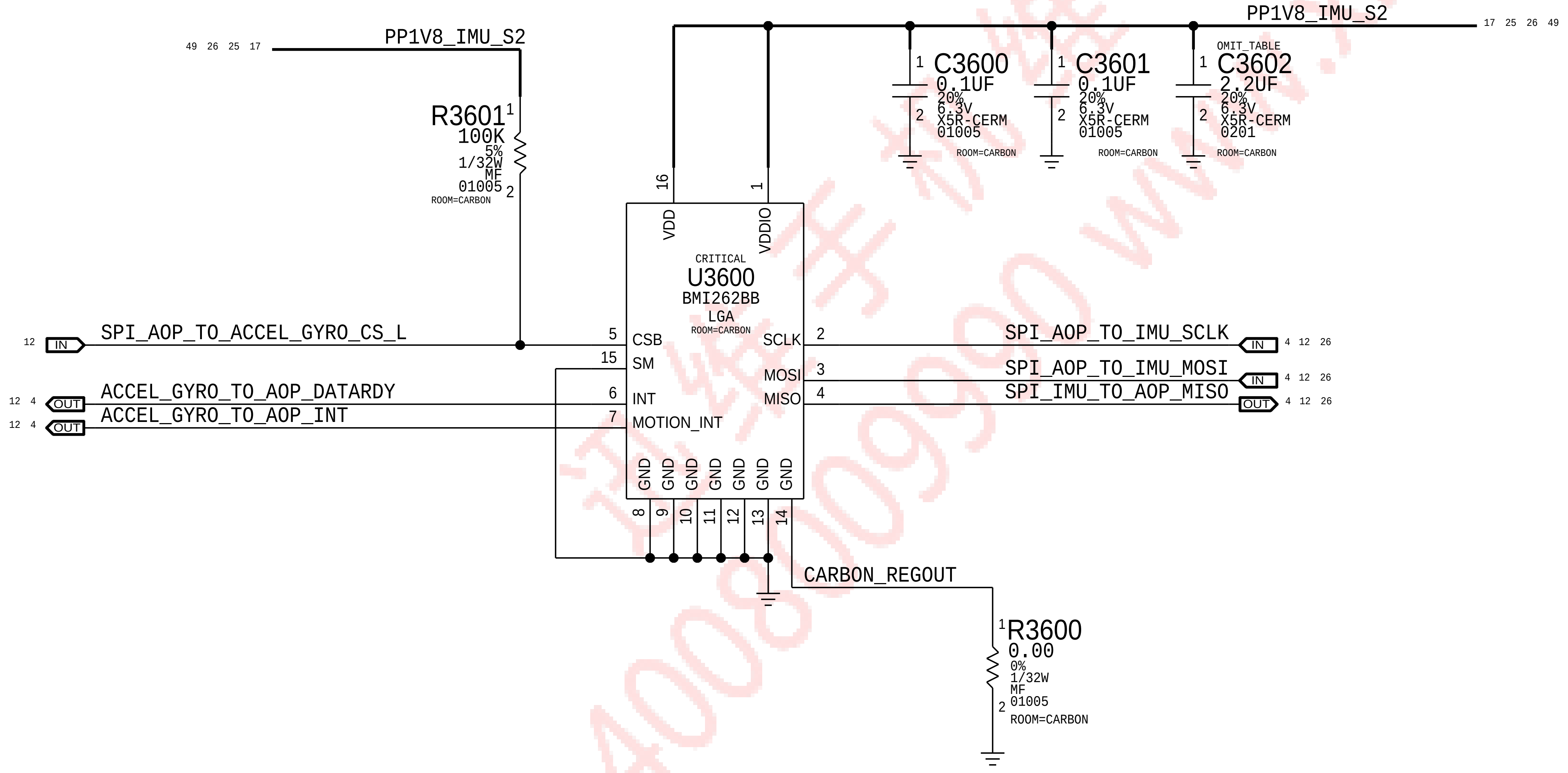
PP1V8_IMU_S2
49 26 25 17
R3601
100K
5%
1/32W
MF
01005
ROOM=CARBON
C3600
0.1UF
20%
6.3V
X5R-CERM
01005
ROOM=CARBON
C3601
0.1UF
20%
6.3V
X5R-CERM
01005
ROOM=CARBON
OMIT_TABLE
C3602
2.2UF
20%
6.3V
X5R-CERM
0201
ROOM=CARBON
17 25 26 49
VDD
VDDIO
CRITICAL
U3600
BMI262BB
LGA
ROOM=CARBON
CSB
SM
INT
MOTION_INT
SCLK
MOSI
MISO
GND
SPI_AOP_TO_ACCEL_GYRO_CS_L
ACCEL_GYRO_TO_AOP_DATARDY
ACCEL_GYRO_TO_AOP_INT
SPI_AOP_TO_IMU_SCLK
SPI_AOP_TO_IMU_MOSI
SPI_IMU_TO_AOP_MISO
IN
OUT
CARBON_REGOUT
R3600
0.00
0%
1/32W
MF
01005
ROOM=CARBON

Magnesium - Compass

(On Dock or Button Flex)

Phosphorus

BOSCH (APN:338S00188)
ST   (APN:338S00230)

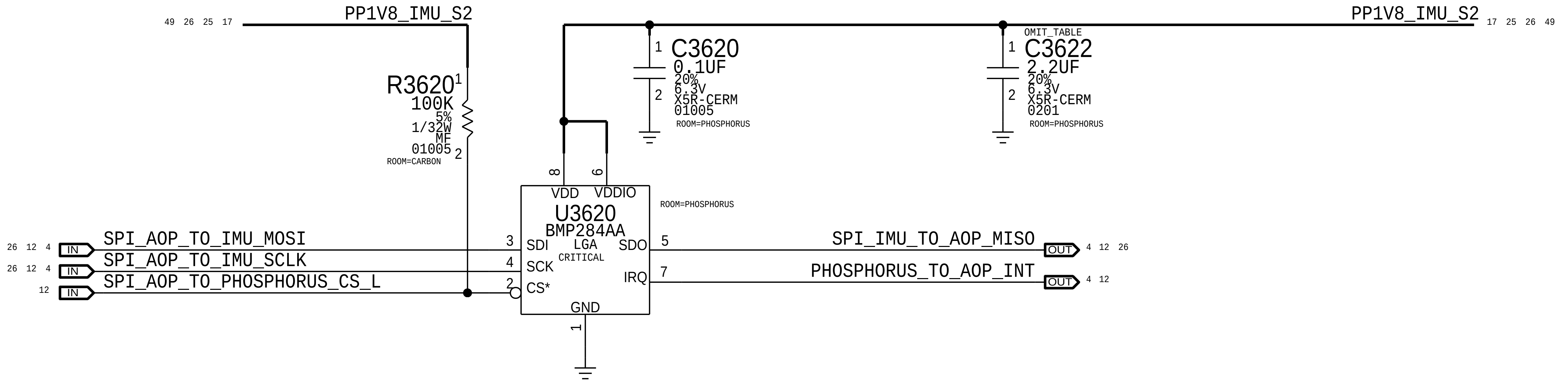
PP1V8_IMU_S2
49 26 25 17
R3620
100K
5%
1/32W
MF
01005
ROOM=CARBON
C3620
0.1UF
20%
6.3V
X5R-CERM
01005
ROOM=PHOSPHORUS
OMIT_TABLE
C3622
2.2UF
20%
6.3V
X5R-CERM
0201
ROOM=PHOSPHORUS
17 25 26 49
VDD
VDDIO
U3620
BMP284AA
LGA
CRITICAL
ROOM=PHOSPHORUS
SDI
SCK
CS*
SDO
IRQ
GND
SPI_AOP_TO_IMU_MOSI
SPI_AOP_TO_IMU_SCLK
SPI_AOP_TO_PHOSPHORUS_CS_L
SPI_IMU_TO_AOP_MISO
PHOSPHORUS_TO_AOP_INT
IN
OUT

SYNC_MASTER=test_mlb SYNC_DATE=10/13/2016

PAGE TITLE
SENSORS

Apple Inc.

DRAWING NUMBER 051-02221
SIZE D
REVISION 9.0.0
BRANCH evt-1
PAGE 36 OF 80
SHEET 26 OF 51

NOTICE OF PROPRIETARY PROPERTY:

THE INFORMATION CONTAINED HEREIN IS THE PROPRIETARY PROPERTY OF APPLE INC. THE POSESSOR AGREES TO THE FOLLOWING:

I TO MAINTAIN THIS DOCUMENT IN CONFIDENCE
II NOT TO REPRODUCE OR COPY IT
III NOT TO REVEAL OR PUBLISH IT IN WHOLE OR PART
IV ALL RIGHTS RESERVED

Camera PMU

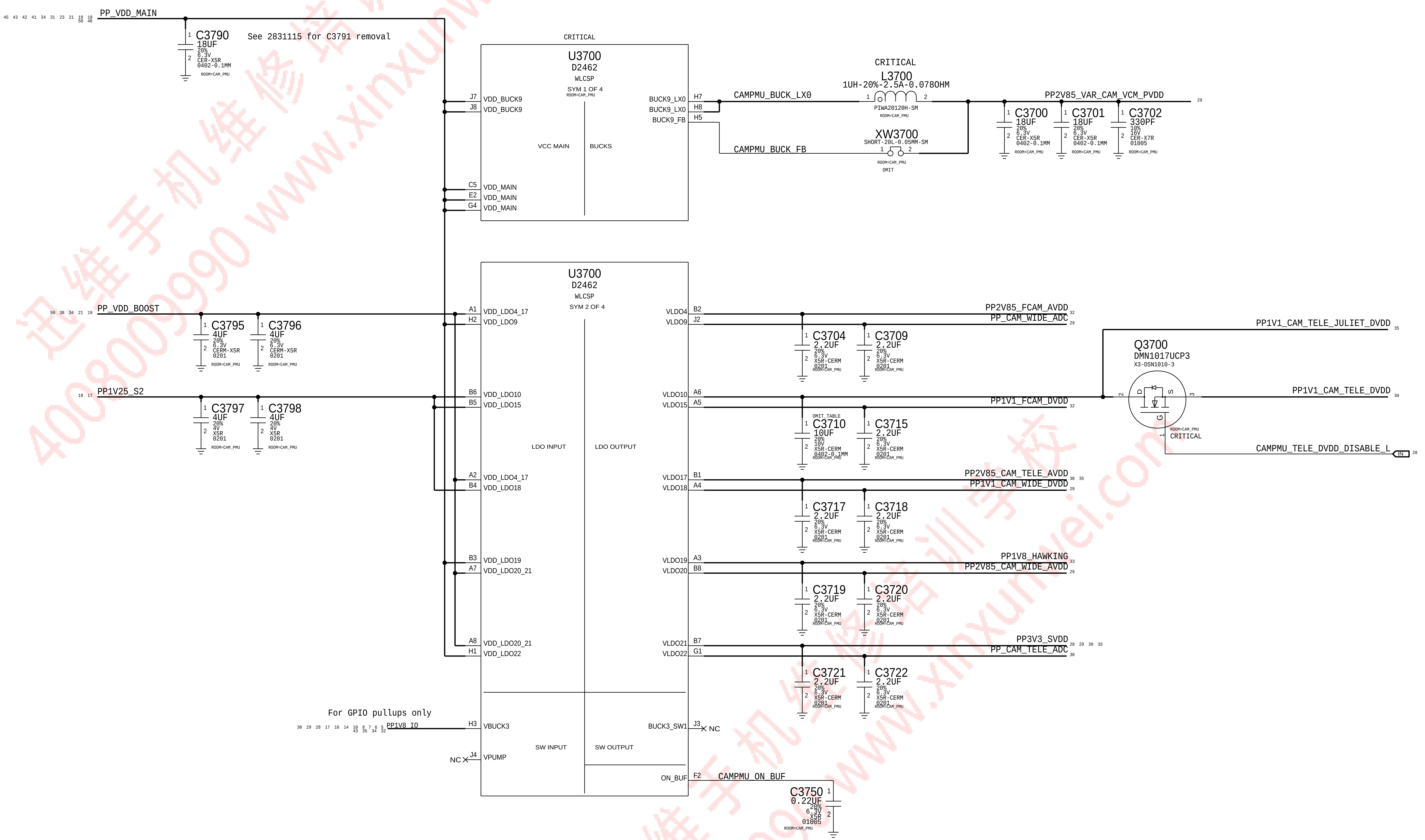

PP_VDD_MAIN
45 43 42 41 34 31 23 21 19 18 50 46
C3790
18UF
20%
6.3V
CER-X5R
0402-0.1MM
ROOM=CAM_PMU
See 2831115 for C3791 removal
CRITICAL
U3700
D2462
WLCSP
SYM 1 OF 4
ROOM=CAM_PMU
J7 VDD_BUCK9
J8 VDD_BUCK9
VCC MAIN
BUCKS
C5 VDD_MAIN
E2 VDD_MAIN
G4 VDD_MAIN
BUCK9_LX0 H7
BUCK9_LX0 H8
BUCK9_FB H5
CAMPMU_BUCK_LX0
CRITICAL
L3700
1UH-20%-2.5A-0.078OHM
PIWA20120H-SM
ROOM=CAM_PMU
CAMPMU_BUCK_FB
XW3700
SHORT-20L-0.05MM-SM
ROOM=CAM_PMU
OMIT
PP2V85_VAR_CAM_VCM_PVDD
29
C3700
18UF
20%
6.3V
CER-X5R
0402-0.1MM
ROOM=CAM_PMU
C3701
18UF
20%
6.3V
CER-X5R
0402-0.1MM
ROOM=CAM_PMU
C3702
330PF
10%
16V
CER-X7R
01005
ROOM=CAM_PMU
U3700
D2462
WLCSP
SYM 2 OF 4
PP_VDD_BOOST
50 38 34 21 19
A1 VDD_LDO4_17
H2 VDD_LDO9
C3795
4UF
20%
6.3V
CERM-X5R
0201
ROOM=CAM_PMU
C3796
4UF
20%
6.3V
CERM-X5R
0201
ROOM=CAM_PMU
PP1V25_S2
19 17
B6 VDD_LDO10
B5 VDD_LDO15
C3797
4UF
20%
4V
X5R
0201
ROOM=CAM_PMU
C3798
4UF
20%
4V
X5R
0201
ROOM=CAM_PMU
LDO INPUT
LDO OUTPUT
A2 VDD_LDO4_17
B4 VDD_LDO18
B3 VDD_LDO19
A7 VDD_LDO20_21
A8 VDD_LDO20_21
H1 VDD_LDO22
VLDO4 B2
VLDO9 J2
PP2V85_FCAM_AVDD 32
PP_CAM_WIDE_ADC 29
C3704
2.2UF
20%
6.3V
X5R-CERM
0201
ROOM=CAM_PMU
C3709
2.2UF
20%
6.3V
X5R-CERM
0201
ROOM=CAM_PMU
VLDO10 A6
VLDO15 A5
PP1V1_FCAM_DVDD 32
OMIT_TABLE
C3710
10UF
20%
10V
X5R-CERM
0402-0.1MM
ROOM=CAM_PMU
C3715
2.2UF
20%
6.3V
X5R-CERM
0201
ROOM=CAM_PMU
VLDO17 B1
VLDO18 A4
PP2V85_CAM_TELE_AVDD 30 35
PP1V1_CAM_WIDE_DVDD 29
C3717
2.2UF
20%
6.3V
X5R-CERM
0201
ROOM=CAM_PMU
C3718
2.2UF
20%
6.3V
X5R-CERM
0201
ROOM=CAM_PMU
VLDO19 A3
VLDO20 B8
PP1V8_HAWKING 33
PP2V85_CAM_WIDE_AVDD 29
C3719
2.2UF
20%
6.3V
X5R-CERM
0201
ROOM=CAM_PMU
C3720
2.2UF
20%
6.3V
X5R-CERM
0201
ROOM=CAM_PMU
VLDO21 B7
VLDO22 G1
PP3V3_SVDD 28 29 30 35
PP_CAM_TELE_ADC 30
C3721
2.2UF
20%
6.3V
X5R-CERM
0201
ROOM=CAM_PMU
C3722
2.2UF
20%
6.3V
X5R-CERM
0201
ROOM=CAM_PMU
PP1V1_CAM_TELE_JULIET_DVDD 35
Q3700
DMN1017UCP3
X3-DSN1010-3
ROOM=CAM_PMU
CRITICAL
PP1V1_CAM_TELE_DVDD 30
CAMPMU_TELE_DVDD_DISABLE_L
IN 28
For GPIO pullups only
30 29 28 17 16 14 10 8 7 6 5 43 35 34 32
PP1V8_IO
H3 VBUCK3
NC J4 VPUMP
SW INPUT
SW OUTPUT
BUCK3_SW1 J3 NC
ON_BUF F2
CAMPMU_ON_BUF
C3750
0.22UF
20%
6.3V
X5R
01005
ROOM=CAM_PMU

PAGE TITLE

CAMERA: PMU (1/2)

DRAWING NUMBER 051-02221

SIZE D

Apple Inc.

REVISION 9.0.0

NOTICE OF PROPRIETARY PROPERTY:

THE INFORMATION CONTAINED HEREIN IS THE PROPRIETARY PROPERTY OF APPLE INC. THE POSESSOR AGREES TO THE FOLLOWING:

I TO MAINTAIN THIS DOCUMENT IN CONFIDENCE

II NOT TO REPRODUCE OR COPY IT

III NOT TO REVEAL OR PUBLISH IT IN WHOLE OR PART

IV ALL RIGHTS RESERVED

BRANCH evt-1

PAGE 37 OF 80

Pull Downs

AP_TO_CAMPMU_RESET_L
R3801
100K
5%
1/32W
MF
01005
ROOM=CAM_PMU
U3700
D2462
WLCSP
SYM 3 OF 4
I2C3_ISP_SDA
R3802
33.2
1%
1/32W
MF
01005
I2C3_ISP_SCL
I2C3_ISP_SDA_U3700
CAMPMU_TO_AP_IRQ_L
R3803
49.9
CAMPMU_TO_AP_IRQ_R_L
AP_TO_CAMPMU_RESET_L
CAMPMU_VREF
CAMPMU_IREF
CAMPMU_VRTC
C3800
0.22UF
20%
6.3V
X5R
01005
ROOM=CAM_PMU
R3800
200K
C3810
0.1UF
SCL
SDA
I2C
IRQ*
CRASH*
RESET_IN
RESET
VREF
IREF
VRTC
REFERENCE
GPIO
TDEV1
TDEV2
TCAL
TEMPERATURE
NC
BI
IN
OUT
PP3V3_SVDD
R3820
100K
GPIO1
GPIO2
GPIO3
GPIO4
GPIO5
GPIO6
GPIO9
GPIO10
GPIO11
GPIO12
GPIO15
CAMPMU_TO_STROBE_DRIVER_HWEN
CAMPMU_TO_RIGEL_ENABLE
PP1V8_IO
MAKE_BASE=TRUE
AP_TO_MANY_BSYNC
YOGI_TO_RIGEL_STATUS_R
CAMPMU_TELE_DVDD_DISABLE_L
MAMA_BEAR_BI_RIGEL_STATUS_R
R3811
10K
YOGI_TO_RIGEL_STATUS
R3810
10K
MAMA_BEAR_BI_RIGEL_STATUS
AMUX_AY
ATM
CAMPMU_TO_PMU_AMUX
U3700
D2462
WLCSP
SYM 4 OF 4
VSS

SYNC_MASTER=test_mlb
SYNC_DATE=10/13/2016

PAGE TITLE
CAMERA: PMU (2/2)

DRAWING NUMBER 051-02221
SIZE D

Apple Inc.

REVISION 9.0.0

NOTICE OF PROPRIETARY PROPERTY:

THE INFORMATION CONTAINED HEREIN IS THE PROPRIETARY PROPERTY OF APPLE INC.
THE POSESSOR AGREES TO THE FOLLOWING:
I TO MAINTAIN THIS DOCUMENT IN CONFIDENCE
II NOT TO REPRODUCE OR COPY IT
III NOT TO REVEAL OR PUBLISH IT IN WHOLE OR PART
IV ALL RIGHTS RESERVED

BRANCH evt-1

PAGE 38 OF 80

SHEET 28 OF 51

迅维职业技能培训中心
400-800-9990
CHINAFIX

Wide Camera Connector

Rcpt: 516S00313 <-- This one on MLB
Plug: 516S00314

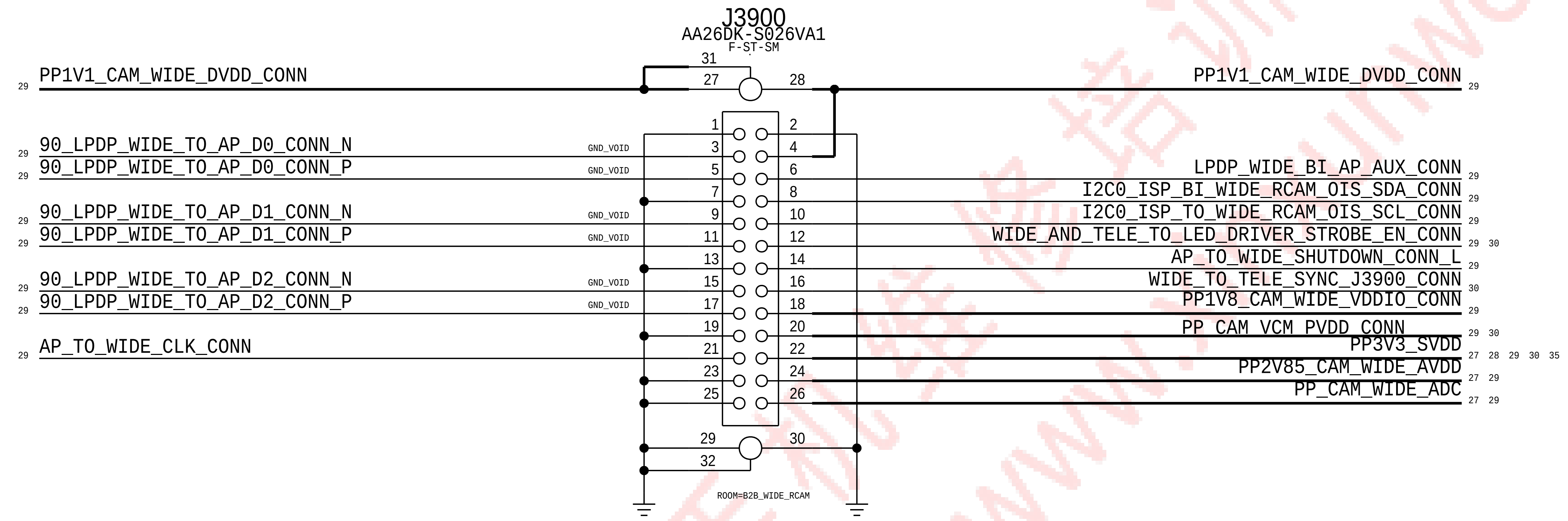
J3900
AA26DK-S026VA1
F-ST-SM
PP1V1_CAM_WIDE_DVDD_CONN 29
90_LPDP_WIDE_TO_AP_D0_CONN_N 29 GND_VOID
90_LPDP_WIDE_TO_AP_D0_CONN_P 29 GND_VOID
90_LPDP_WIDE_TO_AP_D1_CONN_N 29 GND_VOID
90_LPDP_WIDE_TO_AP_D1_CONN_P 29 GND_VOID
90_LPDP_WIDE_TO_AP_D2_CONN_N 29 GND_VOID
90_LPDP_WIDE_TO_AP_D2_CONN_P 29 GND_VOID
AP_TO_WIDE_CLK_CONN 29
31 27 28 1 2 3 4 5 6 7 8 9 10 11 12 13 14 15 16 17 18 19 20 21 22 23 24 25 26 29 30 32
PP1V1_CAM_WIDE_DVDD_CONN 29
LPDP_WIDE_BI_AP_AUX_CONN 29
I2C0_ISP_BI_WIDE_RCAM_OIS_SDA_CONN 29
I2C0_ISP_TO_WIDE_RCAM_OIS_SCL_CONN 29
WIDE_AND_TELE_TO_LED_DRIVER_STROBE_EN_CONN 29 30
AP_TO_WIDE_SHUTDOWN_CONN_L 29
WIDE_TO_TELE_SYNC_J3900_CONN 30
PP1V8_CAM_WIDE_VDDIO_CONN 29
PP_CAM_VCM_PVDD_CONN 29 30
PP3V3_SVDD 27 28 29 30 35
PP2V85_CAM_WIDE_AVDD 27 29
PP_CAM_WIDE_ADC 27 29
ROOM=B2B_WIDE_RCAM

ISP I2C

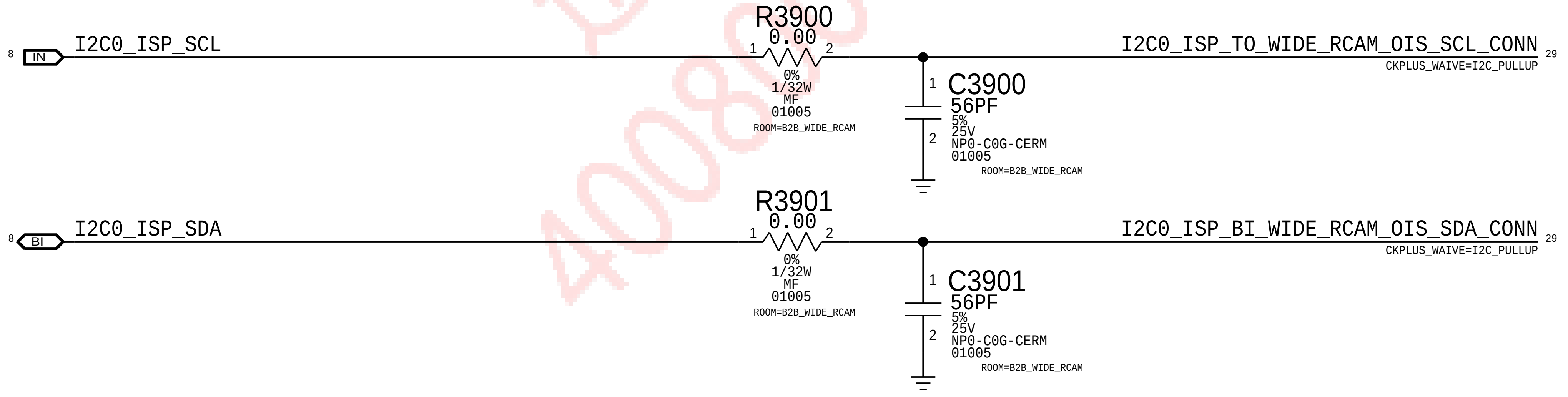
8 IN I2C0_ISP_SCL
R3900 0.00 1 2 0% 1/32W MF 01005 ROOM=B2B_WIDE_RCAM
I2C0_ISP_TO_WIDE_RCAM_OIS_SCL_CONN 29
CKPLUS_WAIVE=I2C_PULLUP
C3900 56PF 5% 25V NP0-C0G-CERM 01005 ROOM=B2B_WIDE_RCAM
8 BI I2C0_ISP_SDA
R3901 0.00 1 2 0% 1/32W MF 01005 ROOM=B2B_WIDE_RCAM
I2C0_ISP_BI_WIDE_RCAM_OIS_SDA_CONN 29
CKPLUS_WAIVE=I2C_PULLUP
C3901 56PF 5% 25V NP0-C0G-CERM 01005 ROOM=B2B_WIDE_RCAM

IO Filters

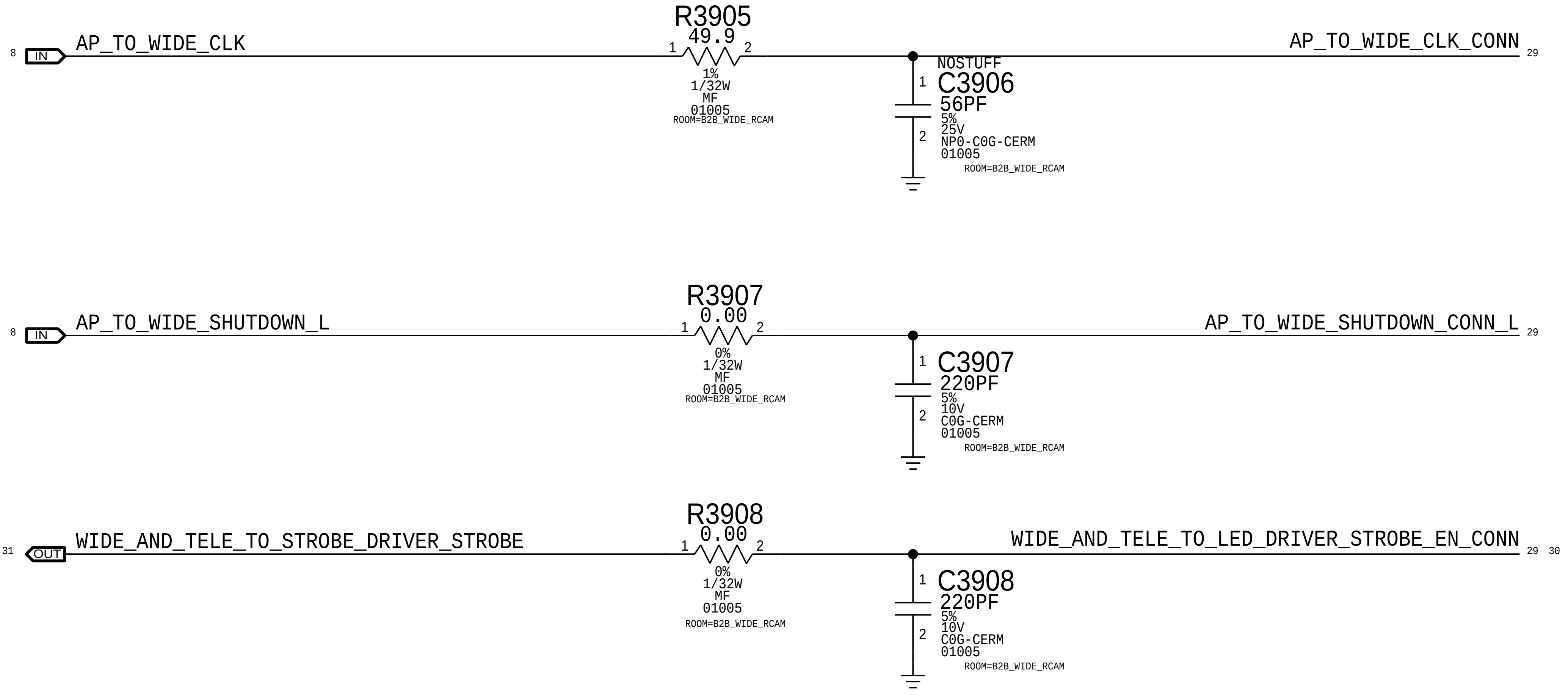
8 IN AP_TO_WIDE_CLK
R3905 49.9 1 2 1% 1/32W MF 01005 ROOM=B2B_WIDE_RCAM
AP_TO_WIDE_CLK_CONN 29
NOSTUFF C3906 56PF 5% 25V NP0-C0G-CERM 01005 ROOM=B2B_WIDE_RCAM
8 IN AP_TO_WIDE_SHUTDOWN_L
R3907 0.00 1 2 0% 1/32W MF 01005 ROOM=B2B_WIDE_RCAM
AP_TO_WIDE_SHUTDOWN_CONN_L 29
C3907 220PF 5% 10V C0G-CERM 01005 ROOM=B2B_WIDE_RCAM
31 OUT WIDE_AND_TELE_TO_STROBE_DRIVER_STROBE
R3908 0.00 1 2 0% 1/32W MF 01005 ROOM=B2B_WIDE_RCAM
WIDE_AND_TELE_TO_LED_DRIVER_STROBE_EN_CONN 29 30
C3908 220PF 5% 10V C0G-CERM 01005 ROOM=B2B_WIDE_RCAM

Power Filtering

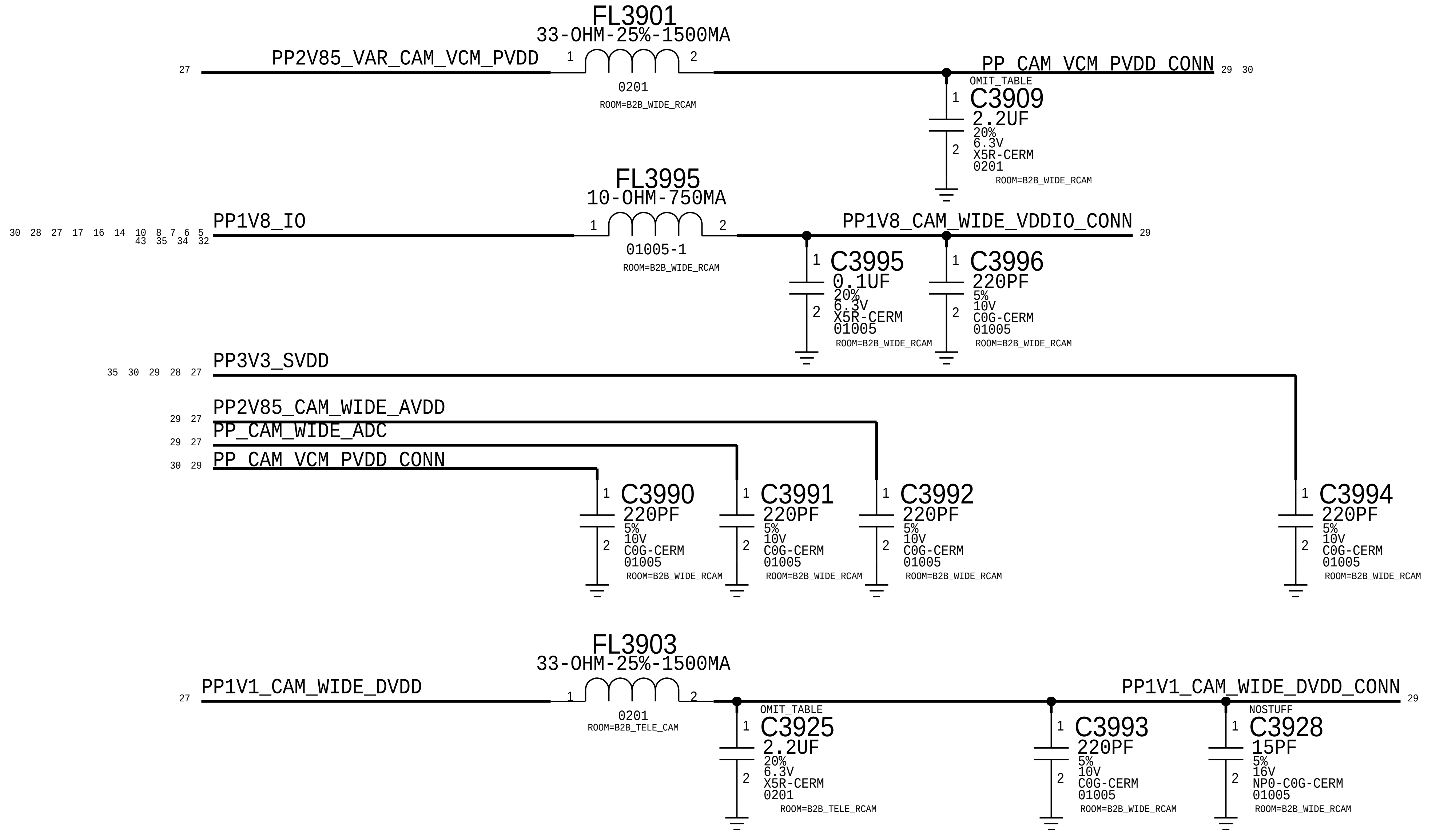
27 PP2V85_VAR_CAM_VCM_PVDD
FL3901 33-OHM-25%-1500MA 1 2 0201 ROOM=B2B_WIDE_RCAM
PP_CAM_VCM_PVDD_CONN 29 30
OMIT_TABLE C3909 2.2UF 20% 6.3V X5R-CERM 0201 ROOM=B2B_WIDE_RCAM
30 28 27 17 16 14 10 8 7 6 5 43 35 34 32 PP1V8_IO
FL3995 10-OHM-750MA 1 2 01005-1 ROOM=B2B_WIDE_RCAM
PP1V8_CAM_WIDE_VDDIO_CONN 29
C3995 0.1UF 20% 6.3V X5R-CERM 01005 ROOM=B2B_WIDE_RCAM
C3996 220PF 5% 10V C0G-CERM 01005 ROOM=B2B_WIDE_RCAM
35 30 29 28 27 PP3V3_SVDD
29 27 PP2V85_CAM_WIDE_AVDD
29 27 PP_CAM_WIDE_ADC
30 29 PP_CAM_VCM_PVDD_CONN
C3990 220PF 5% 10V C0G-CERM 01005 ROOM=B2B_WIDE_RCAM
C3991 220PF 5% 10V C0G-CERM 01005 ROOM=B2B_WIDE_RCAM
C3992 220PF 5% 10V C0G-CERM 01005 ROOM=B2B_WIDE_RCAM
C3994 220PF 5% 10V C0G-CERM 01005 ROOM=B2B_WIDE_RCAM
27 PP1V1_CAM_WIDE_DVDD
FL3903 33-OHM-25%-1500MA 1 2 0201 ROOM=B2B_TELE_CAM
PP1V1_CAM_WIDE_DVDD_CONN 29
OMIT_TABLE C3925 2.2UF 20% 6.3V X5R-CERM 0201 ROOM=B2B_TELE_RCAM
C3993 220PF 5% 10V C0G-CERM 01005 ROOM=B2B_WIDE_RCAM
NOSTUFF C3928 15PF 5% 16V NP0-C0G-CERM 01005 ROOM=B2B_WIDE_RCAM

LPDP Filters

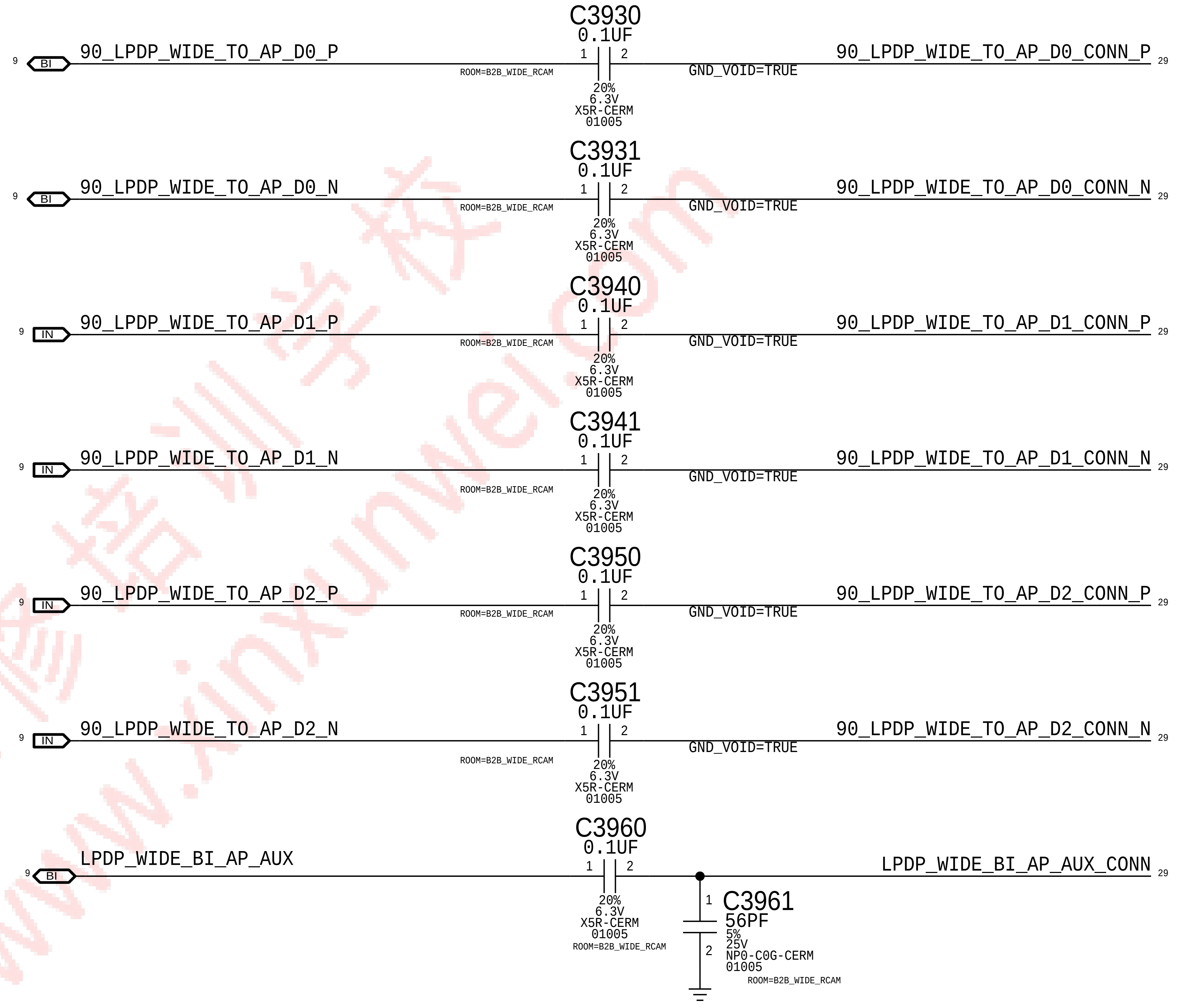
9 BI 90_LPDP_WIDE_TO_AP_D0_P
C3930 0.1UF 1 2 20% 6.3V X5R-CERM 01005 ROOM=B2B_WIDE_RCAM GND_VOID=TRUE
90_LPDP_WIDE_TO_AP_D0_CONN_P 29
9 BI 90_LPDP_WIDE_TO_AP_D0_N
C3931 0.1UF 1 2 20% 6.3V X5R-CERM 01005 ROOM=B2B_WIDE_RCAM GND_VOID=TRUE
90_LPDP_WIDE_TO_AP_D0_CONN_N 29
9 IN 90_LPDP_WIDE_TO_AP_D1_P
C3940 0.1UF 1 2 20% 6.3V X5R-CERM 01005 ROOM=B2B_WIDE_RCAM GND_VOID=TRUE
90_LPDP_WIDE_TO_AP_D1_CONN_P 29
9 IN 90_LPDP_WIDE_TO_AP_D1_N
C3941 0.1UF 1 2 20% 6.3V X5R-CERM 01005 ROOM=B2B_WIDE_RCAM GND_VOID=TRUE
90_LPDP_WIDE_TO_AP_D1_CONN_N 29
9 IN 90_LPDP_WIDE_TO_AP_D2_P
C3950 0.1UF 1 2 20% 6.3V X5R-CERM 01005 ROOM=B2B_WIDE_RCAM GND_VOID=TRUE
90_LPDP_WIDE_TO_AP_D2_CONN_P 29
9 IN 90_LPDP_WIDE_TO_AP_D2_N
C3951 0.1UF 1 2 20% 6.3V X5R-CERM 01005 ROOM=B2B_WIDE_RCAM GND_VOID=TRUE
90_LPDP_WIDE_TO_AP_D2_CONN_N 29
9 BI LPDP_WIDE_BI_AP_AUX
C3960 0.1UF 1 2 20% 6.3V X5R-CERM 01005 ROOM=B2B_WIDE_RCAM
LPDP_WIDE_BI_AP_AUX_CONN 29
C3961 56PF 5% 25V NP0-C0G-CERM 01005 ROOM=B2B_WIDE_RCAM

SYNC_MASTER=test_mlb SYNC_DATE=10/13/2016

PAGE TITLE
CAMERA: B2B Wide (WY)

Apple Inc.

DRAWING NUMBER 051-02221
SIZE D
REVISION [illegible]
BRANCH evt-1
PAGE 39 OF 80
SHEET 29 OF 51

NOTICE OF PROPRIETARY PROPERTY:

THE INFORMATION CONTAINED HEREIN IS THE PROPRIETARY PROPERTY OF APPLE INC.
THE POSESSOR AGREES TO THE FOLLOWING:
I TO MAINTAIN THIS DOCUMENT IN CONFIDENCE
II NOT TO REPRODUCE OR COPY IT
III NOT TO REVEAL OR PUBLISH IT IN WHOLE OR PART
IV ALL RIGHTS RESERVED

Tele Camera Connector

Rcpt: 516S00313 <-- This one on MLB
Plug: 516S00314

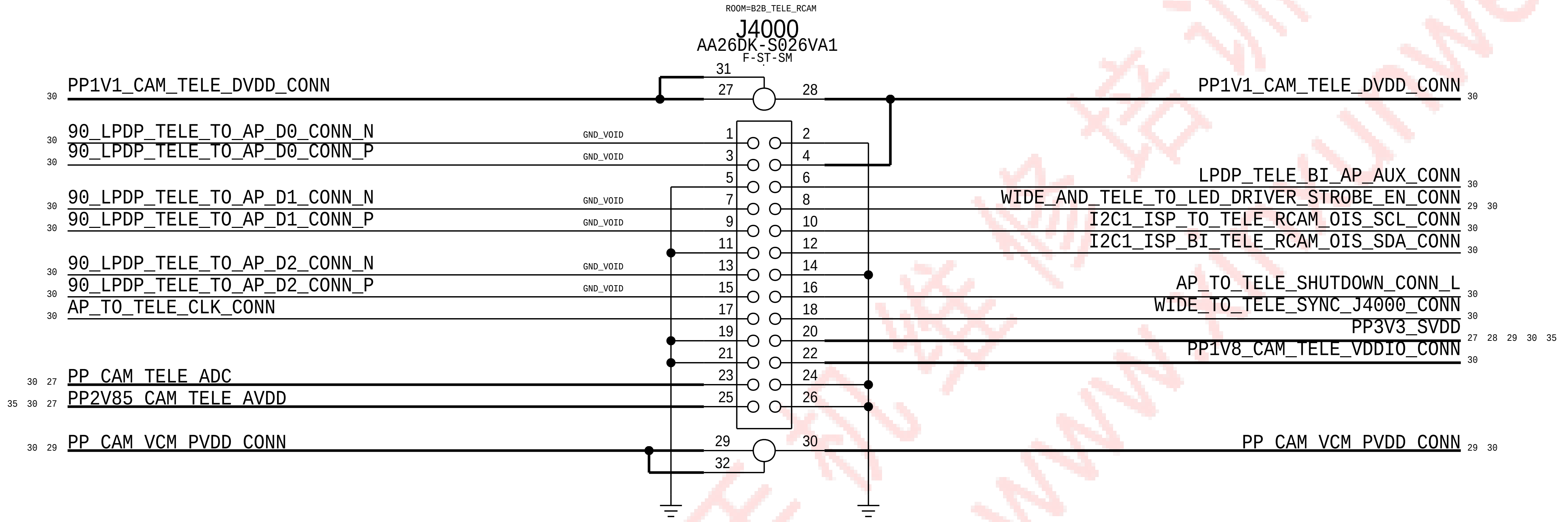
ROOM=B2B_TELE_RCAM
J4000
AA26DK-S026VA1
F-ST-SM
PP1V1_CAM_TELE_DVDD_CONN
90_LPDP_TELE_TO_AP_D0_CONN_N
90_LPDP_TELE_TO_AP_D0_CONN_P
90_LPDP_TELE_TO_AP_D1_CONN_N
90_LPDP_TELE_TO_AP_D1_CONN_P
90_LPDP_TELE_TO_AP_D2_CONN_N
90_LPDP_TELE_TO_AP_D2_CONN_P
AP_TO_TELE_CLK_CONN
PP_CAM_TELE_ADC
PP2V85_CAM_TELE_AVDD
PP_CAM_VCM_PVDD_CONN
GND_VOID
PP1V1_CAM_TELE_DVDD_CONN
LPDP_TELE_BI_AP_AUX_CONN
WIDE_AND_TELE_TO_LED_DRIVER_STROBE_EN_CONN
I2C1_ISP_TO_TELE_RCAM_OIS_SCL_CONN
I2C1_ISP_BI_TELE_RCAM_OIS_SDA_CONN
AP_TO_TELE_SHUTDOWN_CONN_L
WIDE_TO_TELE_SYNC_J4000_CONN
PP3V3_SVDD
PP1V8_CAM_TELE_VDDIO_CONN
PP_CAM_VCM_PVDD_CONN

ISP I2C

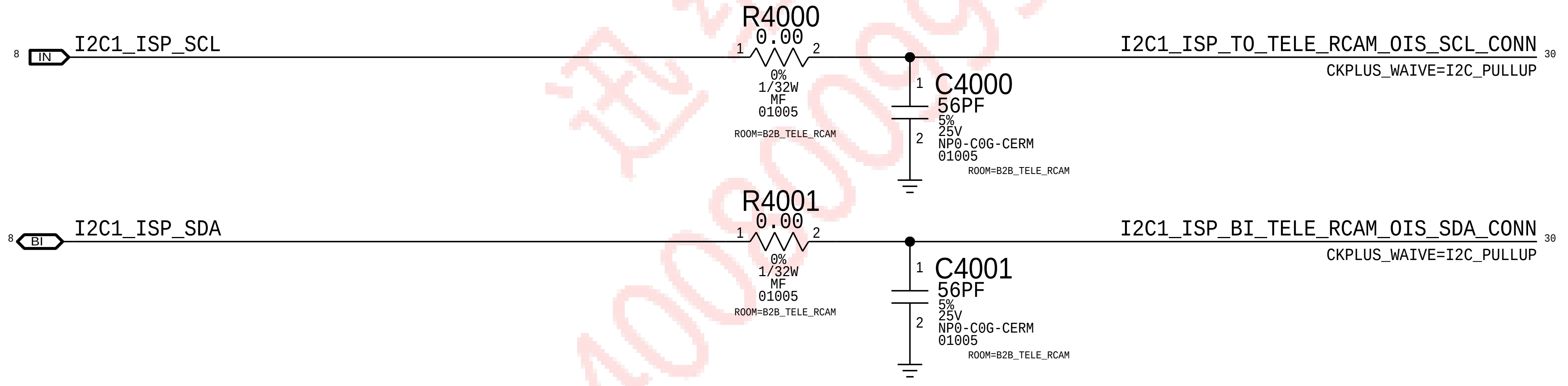
IN
I2C1_ISP_SCL
R4000
0.00
0%
1/32W
MF
01005
ROOM=B2B_TELE_RCAM
I2C1_ISP_TO_TELE_RCAM_OIS_SCL_CONN
CKPLUS_WAIVE=I2C_PULLUP
C4000
56PF
5%
25V
NP0-C0G-CERM
01005
BI
I2C1_ISP_SDA
R4001
0.00
I2C1_ISP_BI_TELE_RCAM_OIS_SDA_CONN
CKPLUS_WAIVE=I2C_PULLUP
C4001
56PF
5%
25V
NP0-C0G-CERM
01005
ROOM=B2B_TELE_RCAM

IO Filters

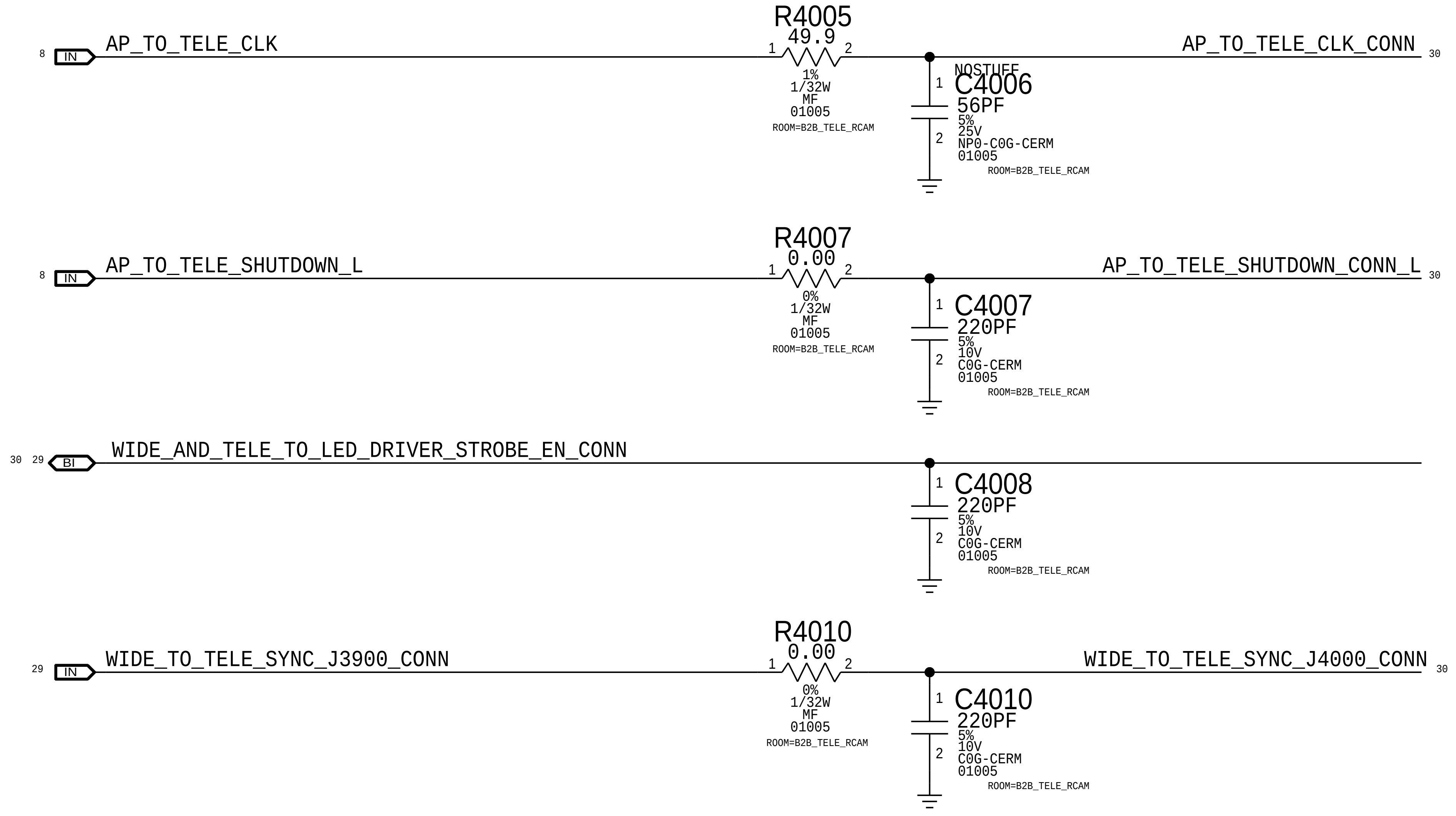
IN
AP_TO_TELE_CLK
R4005
49.9
1%
1/32W
MF
01005
ROOM=B2B_TELE_RCAM
AP_TO_TELE_CLK_CONN
NOSTUFF
C4006
56PF
5%
25V
NP0-C0G-CERM
01005
AP_TO_TELE_SHUTDOWN_L
R4007
0.00
AP_TO_TELE_SHUTDOWN_CONN_L
C4007
220PF
5%
10V
C0G-CERM
01005
BI
WIDE_AND_TELE_TO_LED_DRIVER_STROBE_EN_CONN
C4008
220PF
WIDE_TO_TELE_SYNC_J3900_CONN
R4010
0.00
WIDE_TO_TELE_SYNC_J4000_CONN
C4010
220PF
ROOM=B2B_TELE_RCAM

Power Filtering

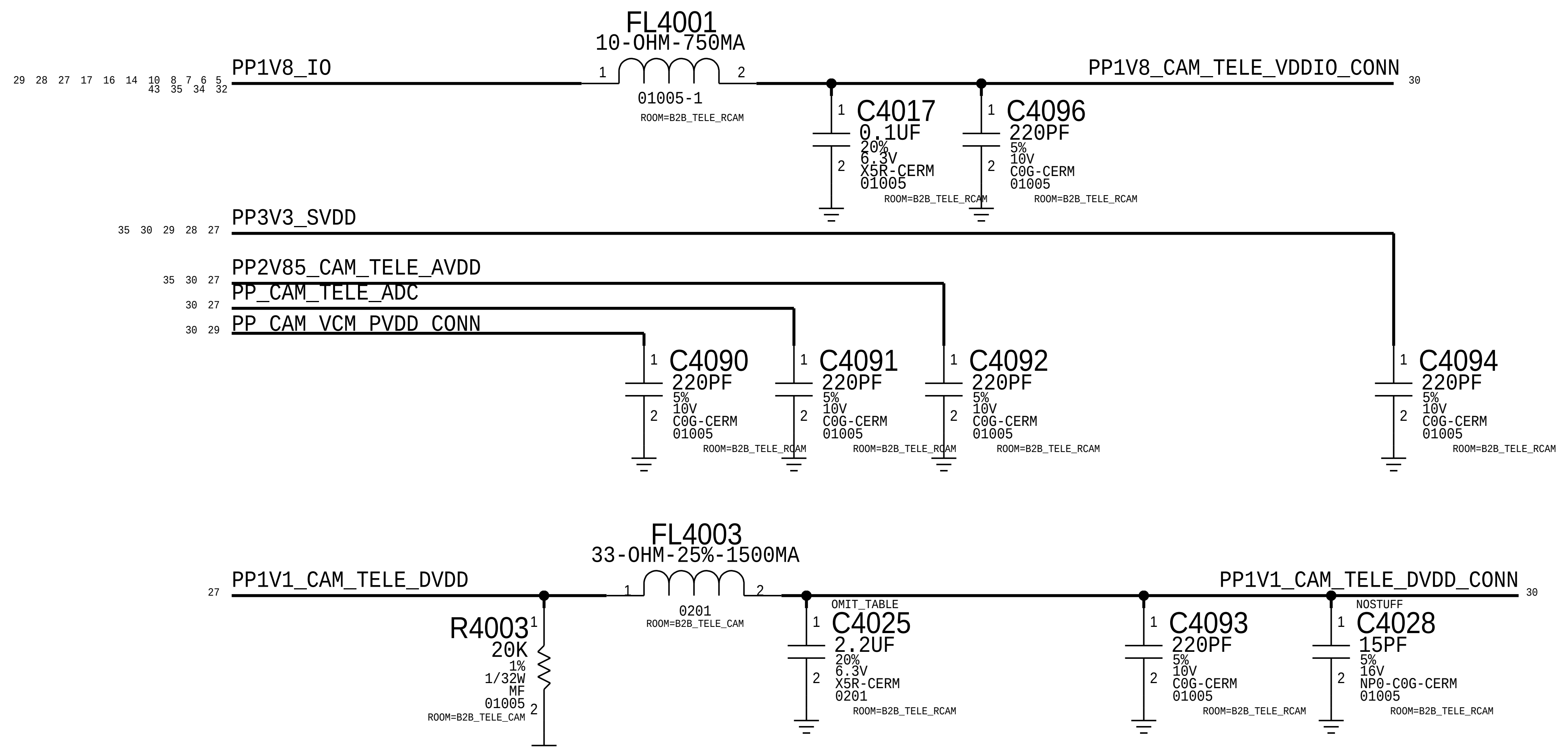
PP1V8_IO
FL4001
10-OHM-750MA
01005-1
ROOM=B2B_TELE_RCAM
PP1V8_CAM_TELE_VDDIO_CONN
C4017
0.1UF
20%
6.3V
X5R-CERM
01005
C4096
220PF
5%
10V
C0G-CERM
01005
PP3V3_SVDD
PP2V85_CAM_TELE_AVDD
PP_CAM_TELE_ADC
PP_CAM_VCM_PVDD_CONN
C4090
220PF
C4091
220PF
C4092
220PF
C4094
220PF
PP1V1_CAM_TELE_DVDD
FL4003
33-OHM-25%-1500MA
0201
ROOM=B2B_TELE_CAM
R4003
20K
1%
1/32W
MF
01005
PP1V1_CAM_TELE_DVDD_CONN
OMIT_TABLE
C4025
2.2UF
20%
6.3V
X5R-CERM
0201
C4093
220PF
NOSTUFF
C4028
15PF
5%
16V
NP0-C0G-CERM
01005

LPDP

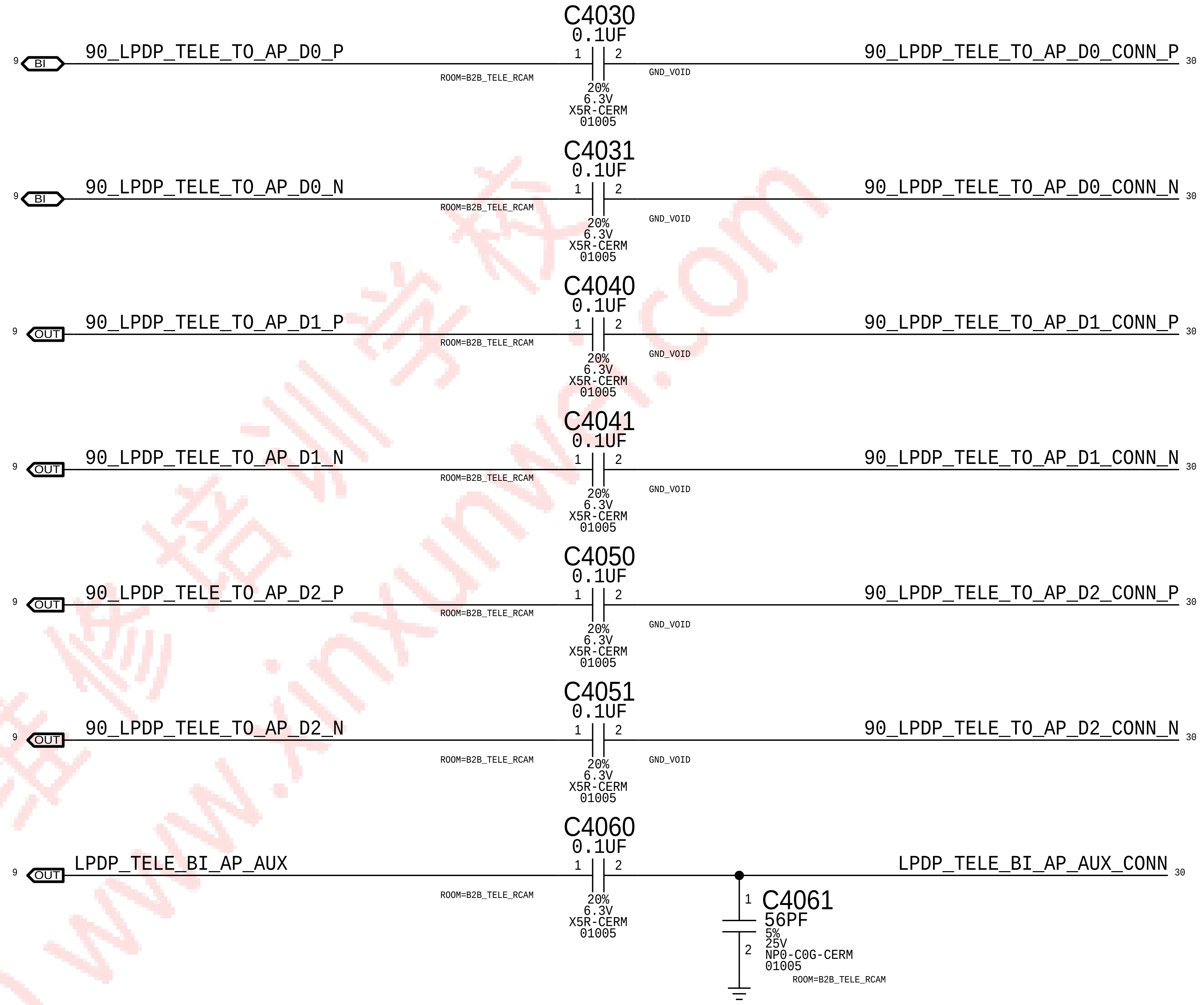
BI
90_LPDP_TELE_TO_AP_D0_P
C4030
0.1UF
20%
6.3V
X5R-CERM
01005
ROOM=B2B_TELE_RCAM
GND_VOID
90_LPDP_TELE_TO_AP_D0_CONN_P
90_LPDP_TELE_TO_AP_D0_N
C4031
0.1UF
90_LPDP_TELE_TO_AP_D0_CONN_N
OUT
90_LPDP_TELE_TO_AP_D1_P
C4040
0.1UF
90_LPDP_TELE_TO_AP_D1_CONN_P
90_LPDP_TELE_TO_AP_D1_N
C4041
0.1UF
90_LPDP_TELE_TO_AP_D1_CONN_N
90_LPDP_TELE_TO_AP_D2_P
C4050
0.1UF
90_LPDP_TELE_TO_AP_D2_CONN_P
90_LPDP_TELE_TO_AP_D2_N
C4051
0.1UF
90_LPDP_TELE_TO_AP_D2_CONN_N
LPDP_TELE_BI_AP_AUX
C4060
0.1UF
LPDP_TELE_BI_AP_AUX_CONN
C4061
56PF
5%
25V
NP0-C0G-CERM
01005

SYNC_MASTER=test_mlb
SYNC_DATE=10/13/2016

PAGE TITLE
CAMERA: B2B Tele (MT)

Apple Inc.

DRAWING NUMBER 051-02221
SIZE D
REVISION 9.0.0
BRANCH evt-1
PAGE 40 OF 80
SHEET 30 OF 51

NOTICE OF PROPRIETARY PROPERTY:

THE INFORMATION CONTAINED HEREIN IS THE PROPRIETARY PROPERTY OF APPLE INC. THE POSESSOR AGREES TO THE FOLLOWING:
I TO MAINTAIN THIS DOCUMENT IN CONFIDENCE
II NOT TO REPRODUCE OR COPY IT
III NOT TO REVEAL OR PUBLISH IT IN WHOLE OR PART
IV ALL RIGHTS RESERVED

LED STROBE DRIVERS (NEON)

APN:353S00558
I2C Address (7-bit): 0x63

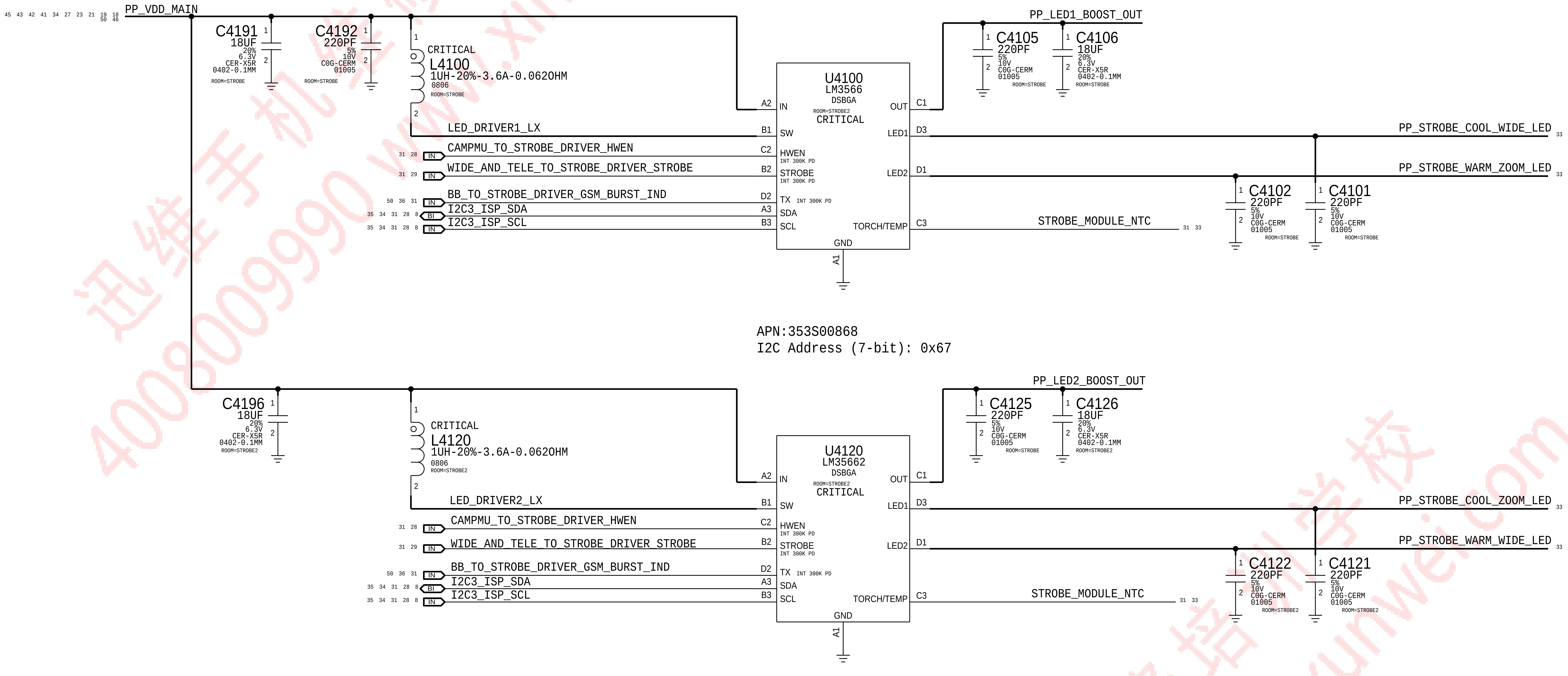
45 43 42 41 34 27 23 21 19 18 50 46
PP_VDD_MAIN
C4191 18UF 20% 6.3V CER-X5R 0402-0.1MM ROOM=STROBE
C4192 220PF 5% 10V C0G-CERM 01005 ROOM=STROBE
CRITICAL
L4100 1UH-20%-3.6A-0.062OHM 0806 ROOM=STROBE
LED_DRIVER1_LX
31 28 IN CAMPMU_TO_STROBE_DRIVER_HWEN
31 29 IN WIDE_AND_TELE_TO_STROBE_DRIVER_STROBE
50 36 31 IN BB_TO_STROBE_DRIVER_GSM_BURST_IND
35 34 31 28 8 BI I2C3_ISP_SDA
35 34 31 28 8 IN I2C3_ISP_SCL
U4100 LM3566 DSBGA ROOM=STROBE2 CRITICAL
A2 IN
B1 SW
C2 HWEN INT 300K PD
B2 STROBE INT 300K PD
D2 TX INT 300K PD
A3 SDA
B3 SCL
GND A1
OUT C1
LED1 D3
LED2 D1
TORCH/TEMP C3
PP_LED1_BOOST_OUT
C4105 220PF 5% 10V C0G-CERM 01005 ROOM=STROBE
C4106 18UF 20% 6.3V CER-X5R 0402-0.1MM ROOM=STROBE
PP_STROBE_COOL_WIDE_LED 33
PP_STROBE_WARM_ZOOM_LED 33
C4102 220PF 5% 10V C0G-CERM 01005 ROOM=STROBE
C4101 220PF 5% 10V C0G-CERM 01005 ROOM=STROBE
STROBE_MODULE_NTC 31 33
APN:353S00868
I2C Address (7-bit): 0x67
C4196 18UF 20% 6.3V CER-X5R 0402-0.1MM ROOM=STROBE2
CRITICAL
L4120 1UH-20%-3.6A-0.062OHM 0806 ROOM=STROBE2
LED_DRIVER2_LX
31 28 IN CAMPMU_TO_STROBE_DRIVER_HWEN
31 29 IN WIDE_AND_TELE_TO_STROBE_DRIVER_STROBE
50 36 31 IN BB_TO_STROBE_DRIVER_GSM_BURST_IND
35 34 31 28 8 BI I2C3_ISP_SDA
35 34 31 28 8 IN I2C3_ISP_SCL
U4120 LM35662 DSBGA ROOM=STROBE2 CRITICAL
A2 IN
B1 SW
C2 HWEN INT 300K PD
B2 STROBE INT 300K PD
D2 TX INT 300K PD
A3 SDA
B3 SCL
GND A1
OUT C1
LED1 D3
LED2 D1
TORCH/TEMP C3
PP_LED2_BOOST_OUT
C4125 220PF 5% 10V C0G-CERM 01005 ROOM=STROBE
C4126 18UF 20% 6.3V CER-X5R 0402-0.1MM ROOM=STROBE2
PP_STROBE_COOL_ZOOM_LED 33
PP_STROBE_WARM_WIDE_LED 33
C4122 220PF 5% 10V C0G-CERM 01005 ROOM=STROBE2
C4121 220PF 5% 10V C0G-CERM 01005 ROOM=STROBE2
STROBE_MODULE_NTC 31 33

SYNC_MASTER=test_mlb SYNC_DATE=10/13/2016

PAGE TITLE
CAMERA: Strobe Drivers

Apple Inc.

DRAWING NUMBER	051-02221
SIZE	D
REVISION	9.0.0
BRANCH	evt-1
PAGE	41 OF 80
SHEET	31 OF 51

NOTICE OF PROPRIETARY PROPERTY:

THE INFORMATION CONTAINED HEREIN IS THE PROPRIETARY PROPERTY OF APPLE INC.
THE POSESSOR AGREES TO THE FOLLOWING:
I TO MAINTAIN THIS DOCUMENT IN CONFIDENCE
II NOT TO REPRODUCE OR COPY IT
III NOT TO REVEAL OR PUBLISH IT IN WHOLE OR PART
IV ALL RIGHTS RESERVED

NEW HAMPSHIRE POWER

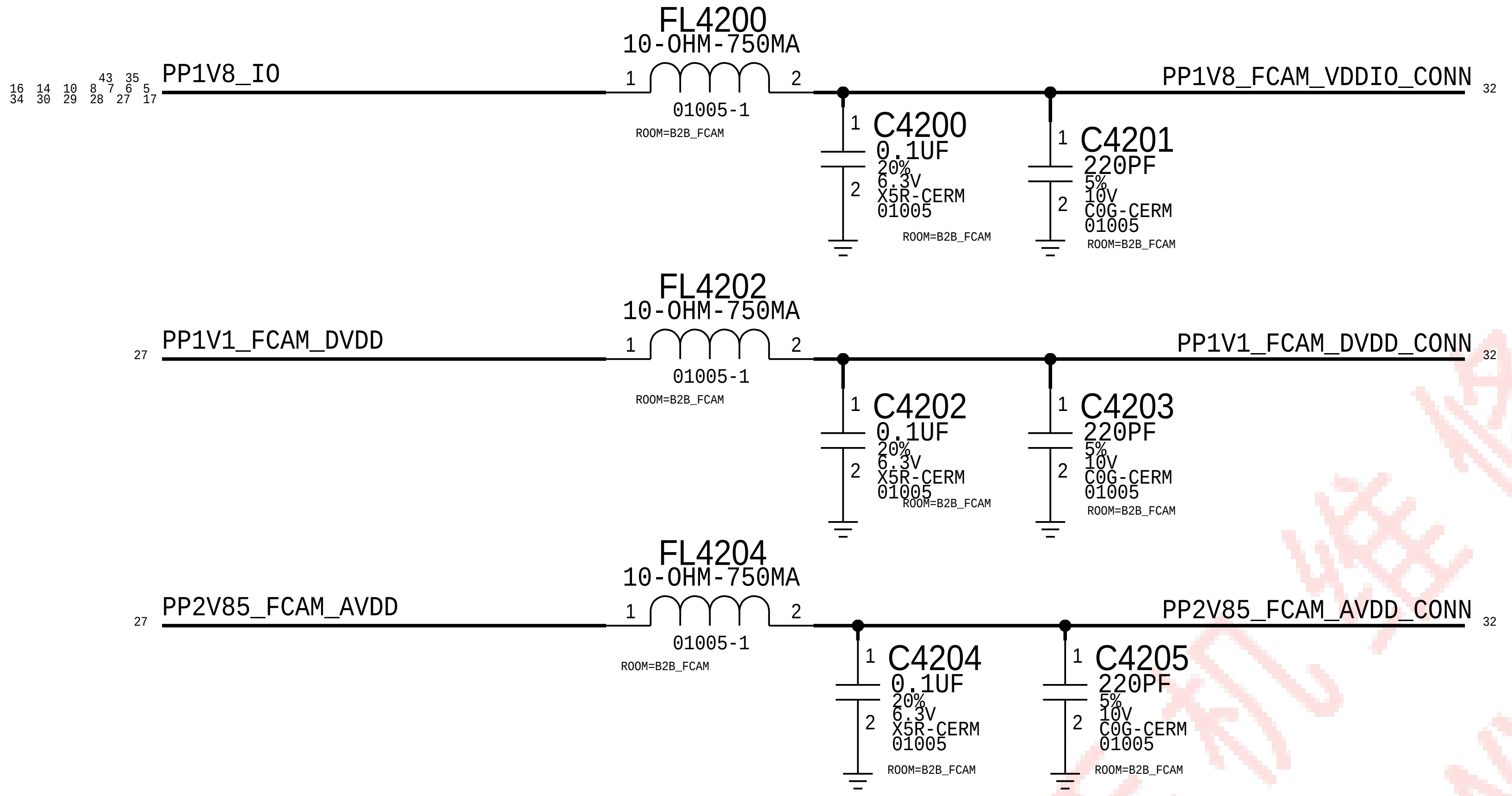
16 34 14 30 10 29 8 28 43 7 35 6 27 5 17
PP1V8_IO
FL4200
10-OHM-750MA
1
2
01005-1
ROOM=B2B_FCAM
PP1V8_FCAM_VDDIO_CONN
32
C4200
0.1UF
20%
6.3V
X5R-CERM
01005
ROOM=B2B_FCAM
C4201
220PF
5%
10V
C0G-CERM
01005
ROOM=B2B_FCAM
27
PP1V1_FCAM_DVDD
FL4202
10-OHM-750MA
01005-1
ROOM=B2B_FCAM
PP1V1_FCAM_DVDD_CONN
32
C4202
0.1UF
20%
6.3V
X5R-CERM
01005
ROOM=B2B_FCAM
C4203
220PF
5%
10V
C0G-CERM
01005
ROOM=B2B_FCAM
27
PP2V85_FCAM_AVDD
FL4204
10-OHM-750MA
01005-1
ROOM=B2B_FCAM
PP2V85_FCAM_AVDD_CONN
32
C4204
0.1UF
20%
6.3V
X5R-CERM
01005
ROOM=B2B_FCAM
C4205
220PF
5%
10V
C0G-CERM
01005
ROOM=B2B_FCAM

FCAM I/O

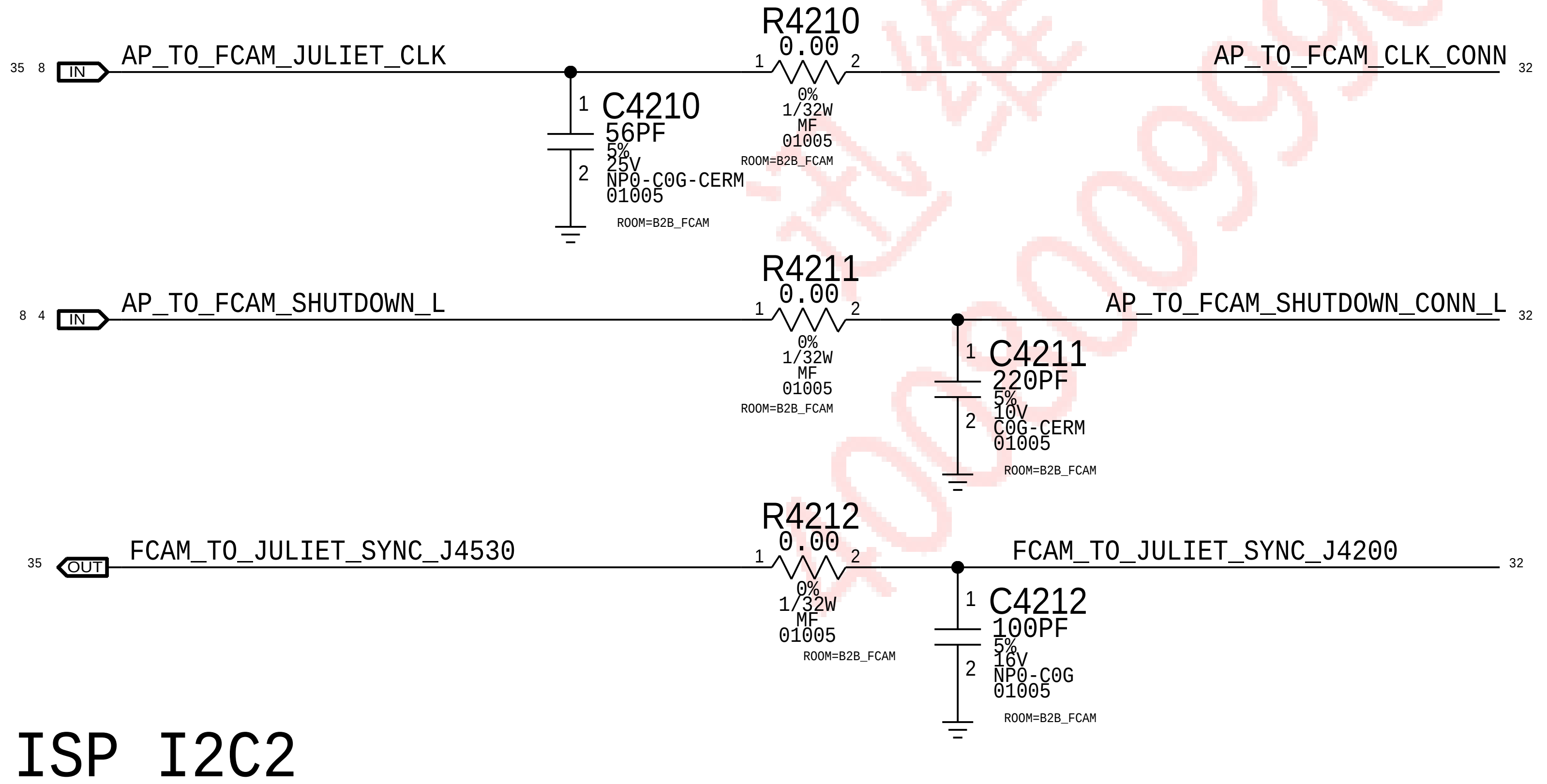
35 8
IN
AP_TO_FCAM_JULIET_CLK
R4210
0.00
0%
1/32W
MF
01005
ROOM=B2B_FCAM
AP_TO_FCAM_CLK_CONN
32
C4210
56PF
5%
25V
NP0-C0G-CERM
01005
ROOM=B2B_FCAM
8 4
IN
AP_TO_FCAM_SHUTDOWN_L
R4211
0.00
0%
1/32W
MF
01005
ROOM=B2B_FCAM
AP_TO_FCAM_SHUTDOWN_CONN_L
32
C4211
220PF
5%
10V
C0G-CERM
01005
ROOM=B2B_FCAM
35
OUT
FCAM_TO_JULIET_SYNC_J4530
R4212
0.00
0%
1/32W
MF
01005
ROOM=B2B_FCAM
FCAM_TO_JULIET_SYNC_J4200
32
C4212
100PF
5%
16V
NP0-C0G
01005
ROOM=B2B_FCAM

ISP I2C2

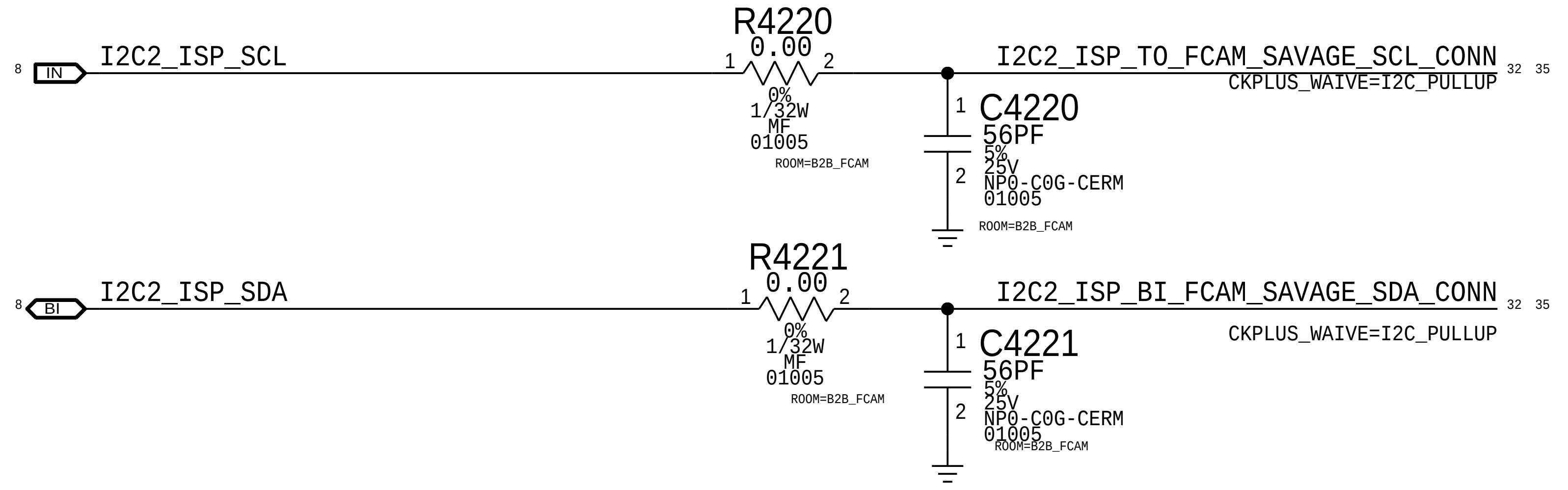
8
IN
I2C2_ISP_SCL
R4220
0.00
0%
1/32W
MF
01005
ROOM=B2B_FCAM
I2C2_ISP_TO_FCAM_SAVAGE_SCL_CONN
32 35
CKPLUS_WAIVE=I2C_PULLUP
C4220
56PF
5%
25V
NP0-C0G-CERM
01005
ROOM=B2B_FCAM
8
BI
I2C2_ISP_SDA
R4221
0.00
0%
1/32W
MF
01005
ROOM=B2B_FCAM
I2C2_ISP_BI_FCAM_SAVAGE_SDA_CONN
32 35
CKPLUS_WAIVE=I2C_PULLUP
C4221
56PF
5%
25V
NP0-C0G-CERM
01005
ROOM=B2B_FCAM

FCAM Connector

Rcpt: 516S00244 <-- This one on MLB
Plug: 516S00245

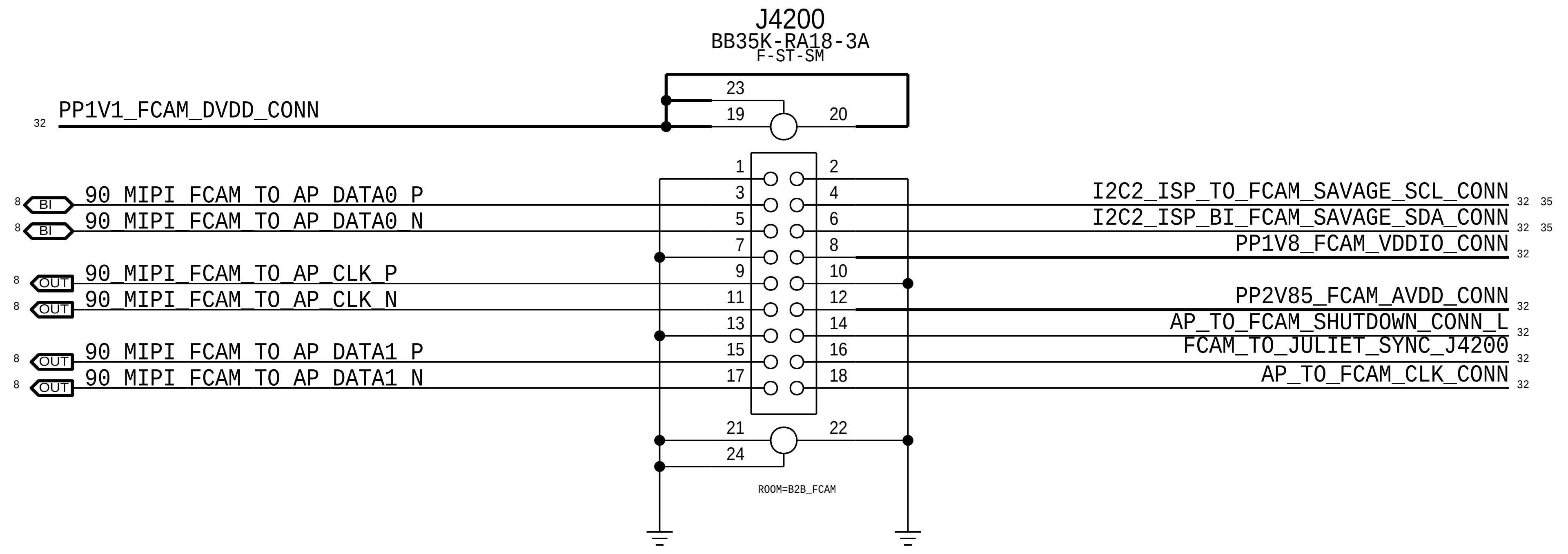
J4200
BB35K-RA18-3A
F-ST-SM
32
PP1V1_FCAM_DVDD_CONN
23
19
20
1
2
8
BI
90_MIPI_FCAM_TO_AP_DATA0_P
8
BI
90_MIPI_FCAM_TO_AP_DATA0_N
8
OUT
90_MIPI_FCAM_TO_AP_CLK_P
8
OUT
90_MIPI_FCAM_TO_AP_CLK_N
8
OUT
90_MIPI_FCAM_TO_AP_DATA1_P
8
OUT
90_MIPI_FCAM_TO_AP_DATA1_N
3 5 7 9 11 13 15 17
4 6 8 10 12 14 16 18
I2C2_ISP_TO_FCAM_SAVAGE_SCL_CONN
32 35
I2C2_ISP_BI_FCAM_SAVAGE_SDA_CONN
32 35
PP1V8_FCAM_VDDIO_CONN
32
PP2V85_FCAM_AVDD_CONN
32
AP_TO_FCAM_SHUTDOWN_CONN_L
32
FCAM_TO_JULIET_SYNC_J4200
32
AP_TO_FCAM_CLK_CONN
32
21
22
24
ROOM=B2B_FCAM

SYNC_MASTER=test_mlb SYNC_DATE=10/13/2016

PAGE TITLE
CAMERA: B2B FCAM

Apple Inc.

DRAWING NUMBER	051-02221
SIZE	D
REVISION	9.0.0
BRANCH	evt-1
PAGE	42 OF 80
SHEET	32 OF 51

NOTICE OF PROPRIETARY PROPERTY:

THE INFORMATION CONTAINED HEREIN IS THE PROPRIETARY PROPERTY OF APPLE INC.
THE POSESSOR AGREES TO THE FOLLOWING:
I TO MAINTAIN THIS DOCUMENT IN CONFIDENCE
II NOT TO REPRODUCE OR COPY IT
III NOT TO REVEAL OR PUBLISH IT IN WHOLE OR PART
IV ALL RIGHTS RESERVED

CHINAFIX
迅维职业技能培训中心
400-800-9990

HAWKING

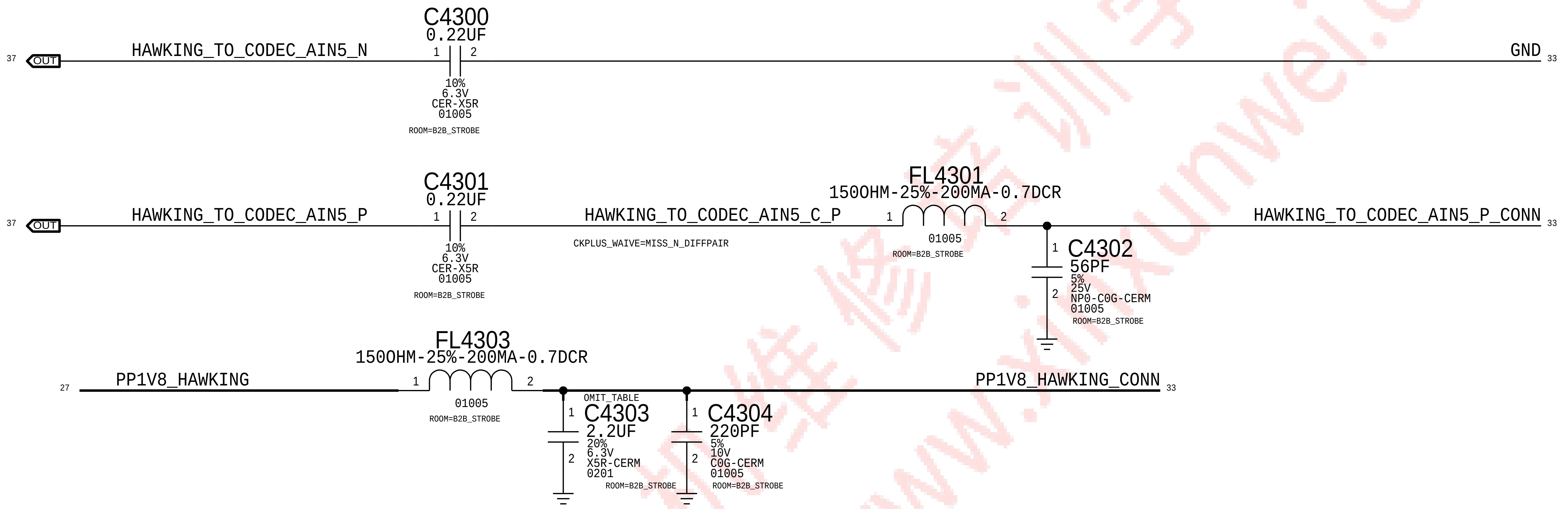

C4300
0.22UF
10%
6.3V
CER-X5R
01005
ROOM=B2B_STROBE
HAWKING_TO_CODEC_AIN5_N
OUT
GND
C4301
0.22UF
10%
6.3V
CER-X5R
01005
HAWKING_TO_CODEC_AIN5_P
HAWKING_TO_CODEC_AIN5_C_P
CKPLUS_WAIVE=MISS_N_DIFFPAIR
FL4301
150OHM-25%-200MA-0.7DCR
01005
HAWKING_TO_CODEC_AIN5_P_CONN
C4302
56PF
5%
25V
NP0-C0G-CERM
01005
FL4303
150OHM-25%-200MA-0.7DCR
PP1V8_HAWKING
PP1V8_HAWKING_CONN
OMIT_TABLE
C4303
2.2UF
20%
6.3V
X5R-CERM
0201
C4304
220PF
5%
10V
C0G-CERM
01005

MIC2 (ANC REF)

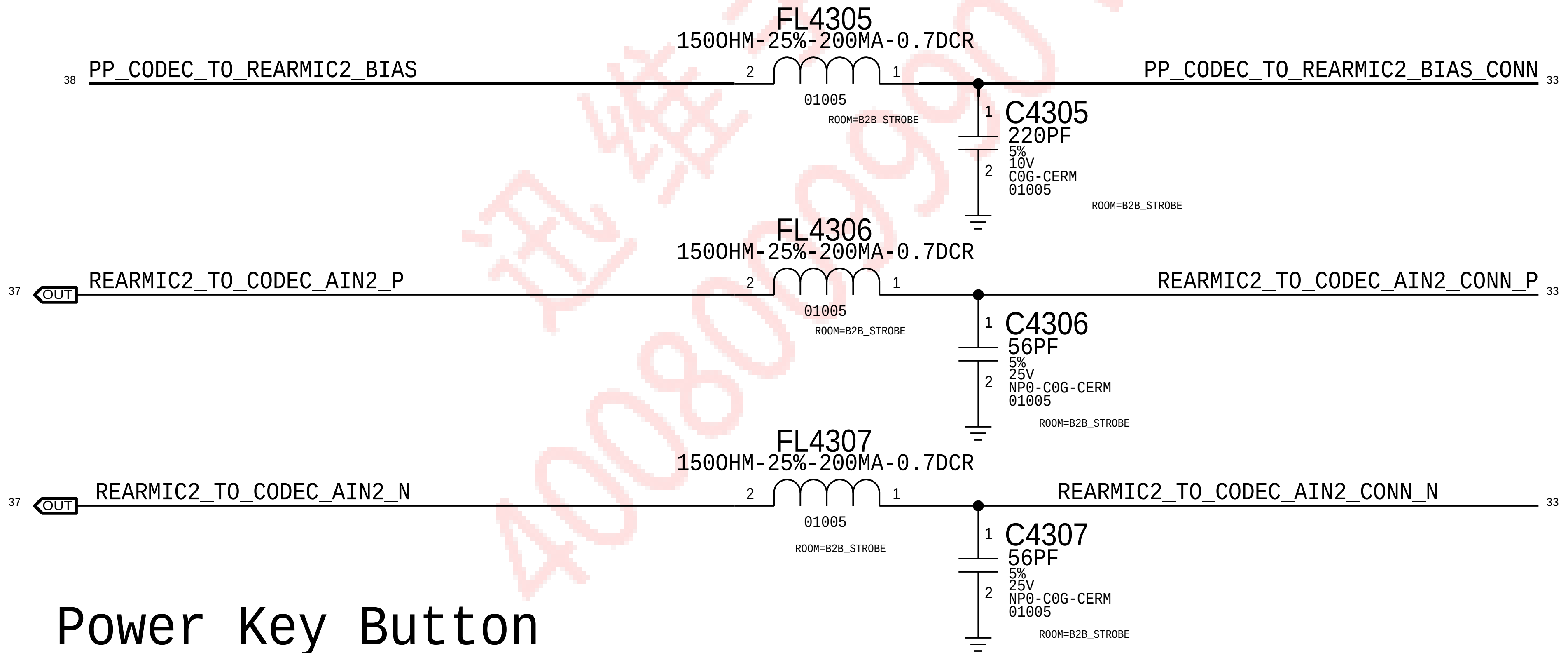

FL4305
150OHM-25%-200MA-0.7DCR
PP_CODEC_TO_REARMIC2_BIAS
PP_CODEC_TO_REARMIC2_BIAS_CONN
01005
ROOM=B2B_STROBE
C4305
220PF
5%
10V
C0G-CERM
01005
FL4306
150OHM-25%-200MA-0.7DCR
REARMIC2_TO_CODEC_AIN2_P
REARMIC2_TO_CODEC_AIN2_CONN_P
OUT
C4306
56PF
5%
25V
NP0-C0G-CERM
01005
FL4307
150OHM-25%-200MA-0.7DCR
REARMIC2_TO_CODEC_AIN2_N
REARMIC2_TO_CODEC_AIN2_CONN_N
C4307
56PF
5%
25V
NP0-C0G-CERM
01005

Power Key Button

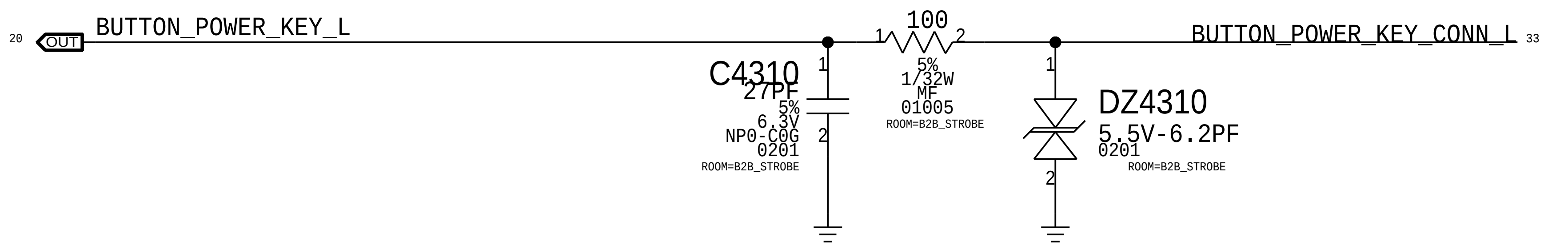

BUTTON_POWER_KEY_L
OUT
R4310
100
5%
1/32W
MF
01005
ROOM=B2B_STROBE
BUTTON_POWER_KEY_CONN_L
C4310
27PF
5%
6.3V
NP0-C0G
0201
DZ4310
5.5V-6.2PF
0201

Strobe Connector

Rcpt: 516S00267 <-- This one on MLB
Plug: 516S00268

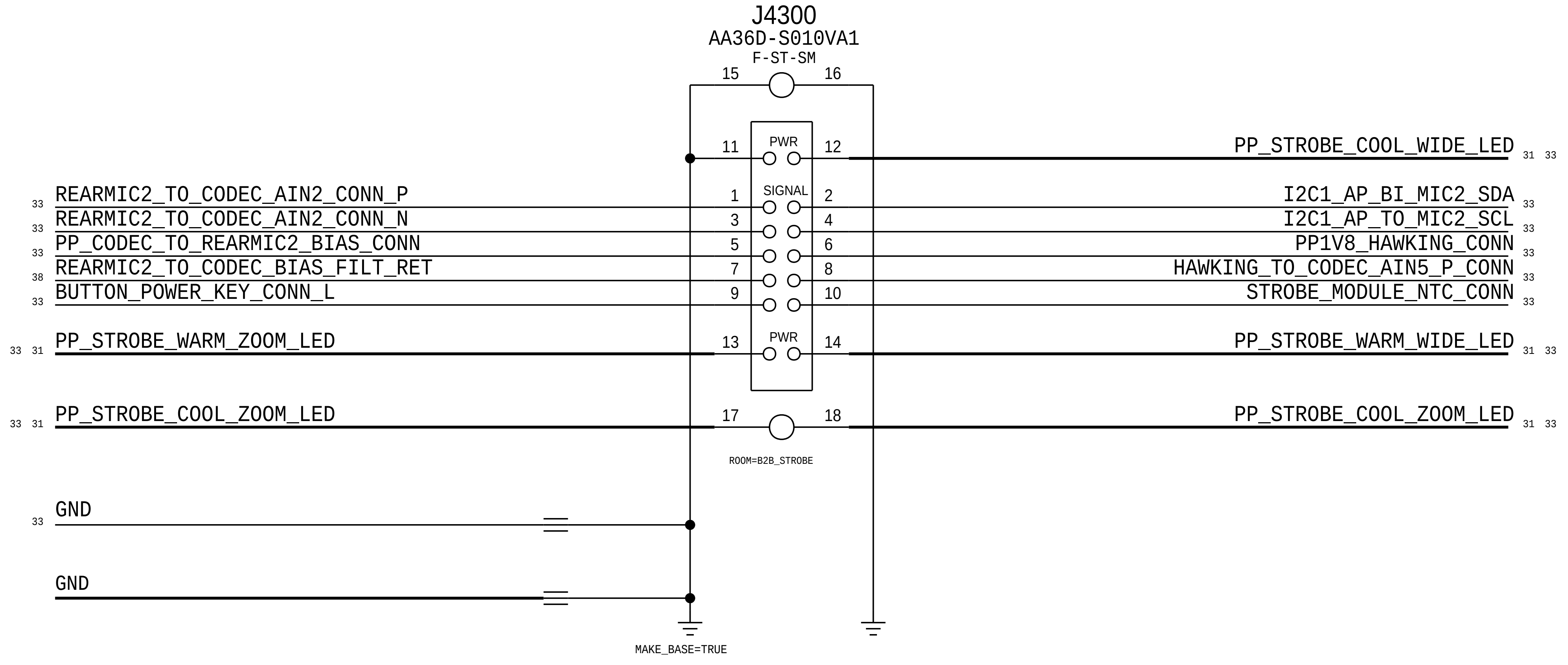

J4300
AA36D-S010VA1
F-ST-SM
PWR
SIGNAL
PWR
REARMIC2_TO_CODEC_AIN2_CONN_P
REARMIC2_TO_CODEC_AIN2_CONN_N
PP_CODEC_TO_REARMIC2_BIAS_CONN
REARMIC2_TO_CODEC_BIAS_FILT_RET
BUTTON_POWER_KEY_CONN_L
PP_STROBE_WARM_ZOOM_LED
PP_STROBE_COOL_ZOOM_LED
GND
GND
PP_STROBE_COOL_WIDE_LED
I2C1_AP_BI_MIC2_SDA
I2C1_AP_TO_MIC2_SCL
PP1V8_HAWKING_CONN
HAWKING_TO_CODEC_AIN5_P_CONN
STROBE_MODULE_NTC_CONN
PP_STROBE_WARM_WIDE_LED
PP_STROBE_COOL_ZOOM_LED
ROOM=B2B_STROBE
MAKE_BASE=TRUE

Strobe Filtering

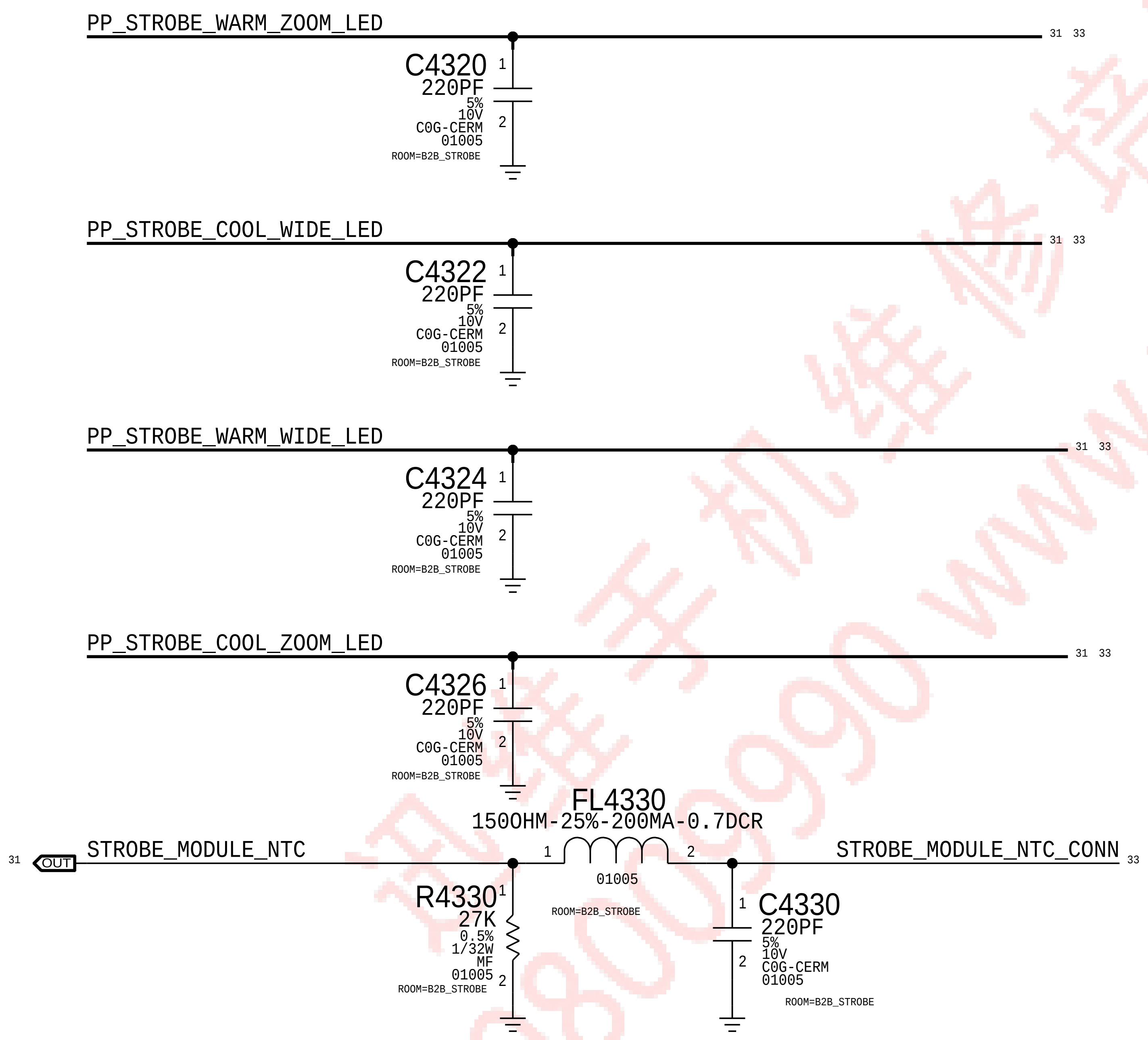

PP_STROBE_WARM_ZOOM_LED
C4320
220PF
5%
10V
C0G-CERM
01005
ROOM=B2B_STROBE
PP_STROBE_COOL_WIDE_LED
C4322
220PF
PP_STROBE_WARM_WIDE_LED
C4324
220PF
PP_STROBE_COOL_ZOOM_LED
C4326
220PF
STROBE_MODULE_NTC
OUT
FL4330
150OHM-25%-200MA-0.7DCR
01005
STROBE_MODULE_NTC_CONN
R4330
27K
0.5%
1/32W
MF
01005
C4330
220PF
5%
10V
C0G-CERM
01005

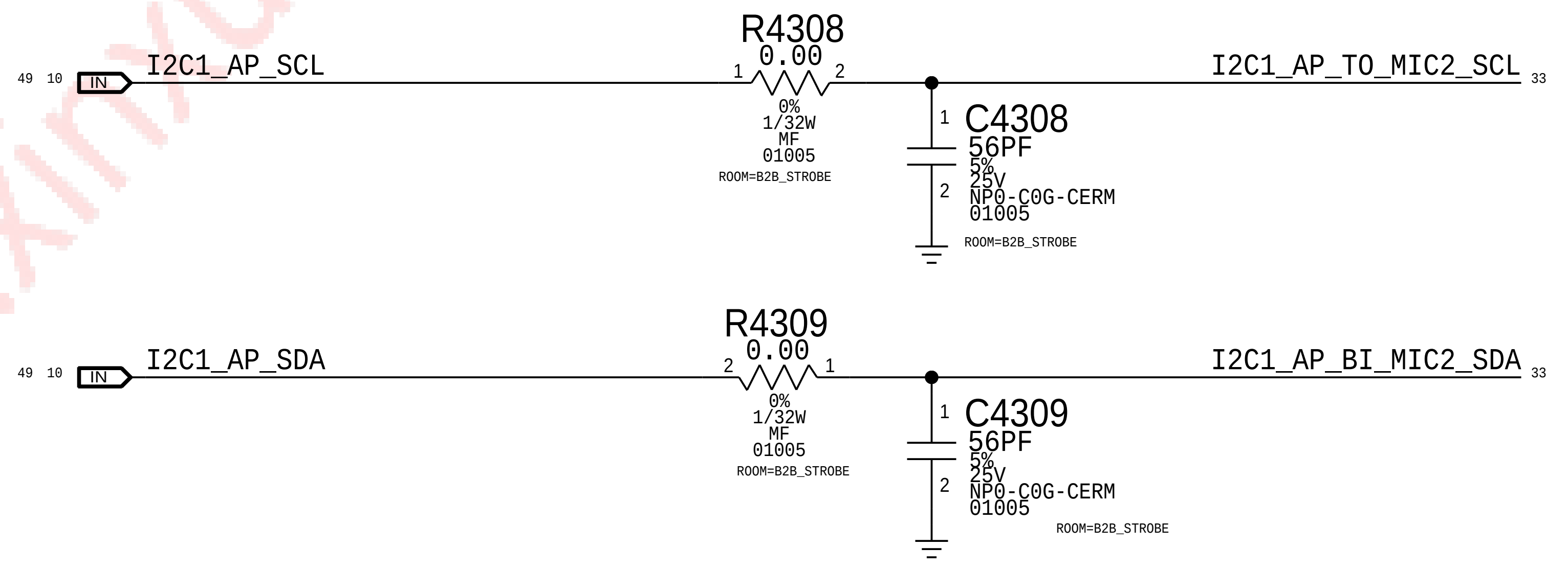

I2C1_AP_SCL
IN
R4308
0.00
0%
1/32W
MF
01005
ROOM=B2B_STROBE
I2C1_AP_TO_MIC2_SCL
C4308
56PF
5%
25V
NP0-C0G-CERM
01005
I2C1_AP_SDA
IN
R4309
0.00
I2C1_AP_BI_MIC2_SDA
C4309
56PF
5%
25V
NP0-C0G-CERM
01005

SYNC_MASTER=test_mlb SYNC_DATE=10/13/2016

PAGE TITLE
CAMERA: B2B Strobe + Hold Button

DRAWING NUMBER 051-02221
SIZE D

Apple Inc.

REVISION 9.0.0

BRANCH evt-1

PAGE 43 OF 80

SHEET 33 OF 51

NOTICE OF PROPRIETARY PROPERTY:

THE INFORMATION CONTAINED HEREIN IS THE PROPRIETARY PROPERTY OF APPLE INC.
THE POSESSOR AGREES TO THE FOLLOWING:
I TO MAINTAIN THIS DOCUMENT IN CONFIDENCE
II NOT TO REPRODUCE OR COPY IT
III NOT TO REVEAL OR PUBLISH IT IN WHOLE OR PART
IV ALL RIGHTS RESERVED

Rigel Driver

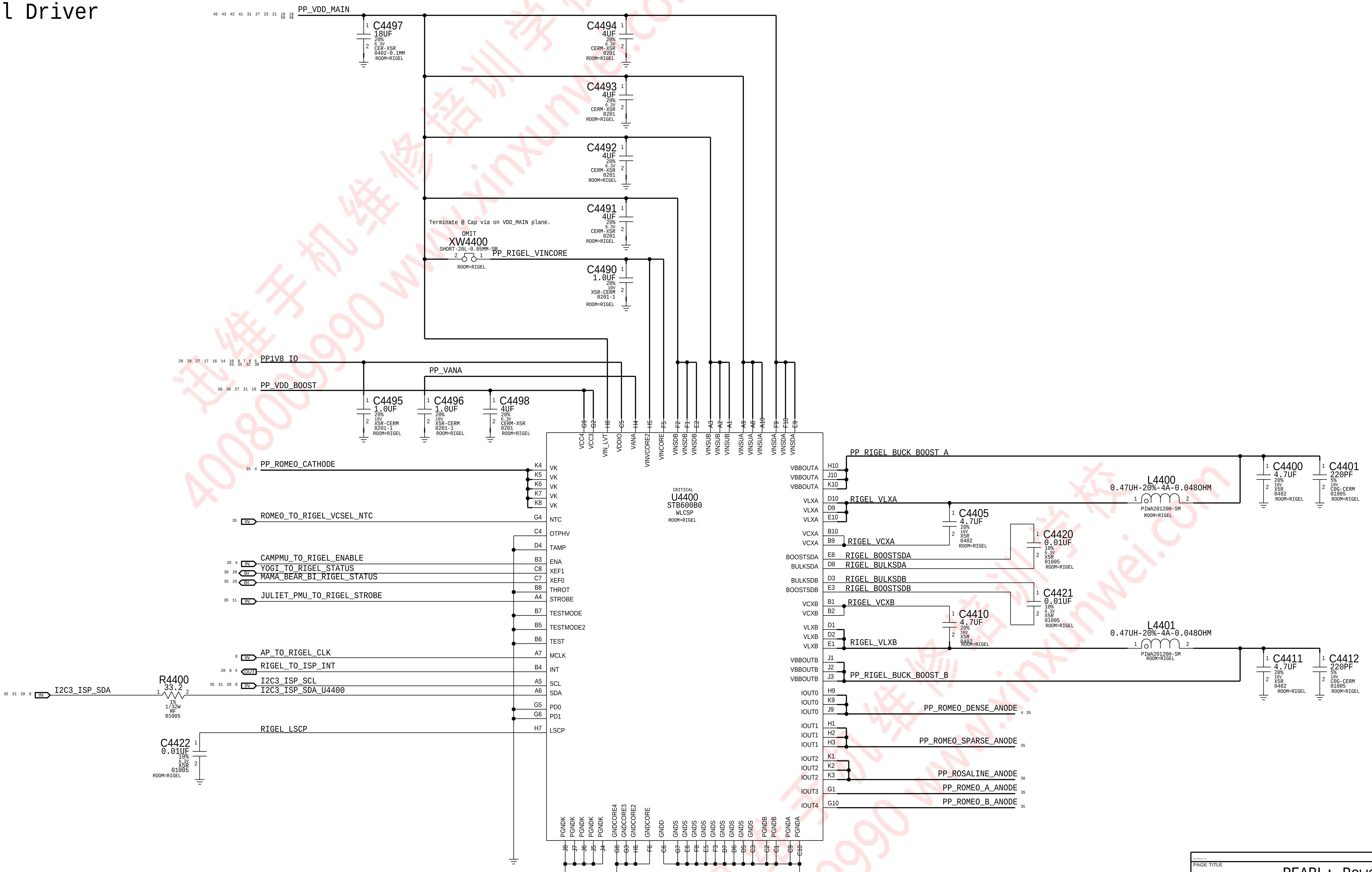
PP_VDD_MAIN
C4497 18UF 20% 6.3V CER-X5R 0402-0.1MM ROOM=RIGEL
C4494 4UF 20% 6.3V CERM-X5R 0201 ROOM=RIGEL
C4493 4UF 20% 6.3V CERM-X5R 0201 ROOM=RIGEL
C4492 4UF 20% 6.3V CERM-X5R 0201 ROOM=RIGEL
C4491 4UF 20% 6.3V CERM-X5R 0201 ROOM=RIGEL
Terminate @ Cap via on VDD_MAIN plane.
OMIT XW4400 SHORT-20L-0.05MM-SM ROOM=RIGEL
PP_RIGEL_VINCORE
C4490 1.0UF 20% 10V X5R-CERM 0201-1 ROOM=RIGEL
PP1V8_IO
PP_VANA
PP_VDD_BOOST
C4495 1.0UF 20% 10V X5R-CERM 0201-1 ROOM=RIGEL
C4496 1.0UF 20% 10V X5R-CERM 0201-1 ROOM=RIGEL
C4498 4UF 20% 6.3V CERM-X5R 0201 ROOM=RIGEL
CRITICAL U4400 STB600B0 WLCSP ROOM=RIGEL
VCC4 G9, VCC3 G2, VIN_LVT H8, VDDIO C5, VANA H4, VINVCORE2 H5, VINCORE F5
VINSDB F2 F1 E2, VINSUB A3 A2 A1, VINSUA A9 A8 A10, VINSDA F9 F10 E9
PP_ROMEO_CATHODE
VK K4 K5 K6 K7 K8
ROMEO_TO_RIGEL_VCSEL_NTC — G4 NTC
C4 OTPHV
D4 TAMP
CAMPMU_TO_RIGEL_ENABLE — B3 ENA
YOGI_TO_RIGEL_STATUS — C8 XEF1
MAMA_BEAR_BI_RIGEL_STATUS — C7 XEF0
B8 THROT
JULIET_PMU_TO_RIGEL_STROBE — A4 STROBE
B7 TESTMODE
B5 TESTMODE2
B6 TEST
AP_TO_RIGEL_CLK — A7 MCLK
RIGEL_TO_ISP_INT — B4 INT
I2C3_ISP_SCL — A5 SCL
I2C3_ISP_SDA_U4400 — A6 SDA
G5 PD0
G6 PD1
RIGEL_LSCP — H7 LSCP
I2C3_ISP_SDA
R4400 33.2 1% 1/32W MF 01005
C4422 0.01UF 10% 6.3V X5R 01005 ROOM=RIGEL
IN IN BI BI IN IN OUT IN IN
PP_RIGEL_BUCK_BOOST_A
VBBOUTA H10 J10 K10
VLXA D10 D9 E10
RIGEL_VLXA
VCXA B10 B9
RIGEL_VCXA
BOOSTSDA E8 RIGEL_BOOSTSDA
BULKSDA D8 RIGEL_BULKSDA
BULKSDB D3 RIGEL_BULKSDB
BOOSTSDB E3 RIGEL_BOOSTSDB
VCXB B1 B2
RIGEL_VCXB
VLXB D1 D2 E1
RIGEL_VLXB
VBBOUTB J1 J2 J3
PP_RIGEL_BUCK_BOOST_B
IOUT0 H9 K9 J9 — PP_ROMEO_DENSE_ANODE
IOUT1 H1 H2 H3 — PP_ROMEO_SPARSE_ANODE
IOUT2 K1 K2 K3 — PP_ROSALINE_ANODE
IOUT3 G1 — PP_ROMEO_A_ANODE
IOUT4 G10 — PP_ROMEO_B_ANODE
L4400 0.47UH-20%-4A-0.048OHM PIWA20120H-SM ROOM=RIGEL
L4401 0.47UH-20%-4A-0.048OHM PIWA20120H-SM ROOM=RIGEL
C4400 4.7UF 20% 16V X5R 0402 ROOM=RIGEL
C4401 220PF 5% 10V C0G-CERM 01005 ROOM=RIGEL
C4405 4.7UF 20% 16V X5R 0402 ROOM=RIGEL
C4420 0.01UF 10% 6.3V X5R 01005 ROOM=RIGEL
C4421 0.01UF 10% 6.3V X5R 01005 ROOM=RIGEL
C4410 4.7UF 20% 16V X5R 0402 ROOM=RIGEL
C4411 4.7UF 20% 16V X5R 0402 ROOM=RIGEL
C4412 220PF 5% 10V C0G-CERM 01005 ROOM=RIGEL
PGNDK J8 J7 J6 J5 J4
GNDCORE4 G8, GNDCORE3 G3, GNDCORE2 H6, GNDCORE F6
GNDD C6
GNDS G7 E6 F8 E5 F3 D7 D6 D5 G3
PGNDB C2 C1, PGNDA C9 C10

PAGE TITLE

PEARL: Power

DRAWING NUMBER 051-02221 SIZE D

Apple Inc.

REVISION 9.0.0

NOTICE OF PROPRIETARY PROPERTY:

THE INFORMATION CONTAINED HEREIN IS THE PROPRIETARY PROPERTY OF APPLE INC. THE POSESSOR AGREES TO THE FOLLOWING:

I TO MAINTAIN THIS DOCUMENT IN CONFIDENCE
II NOT TO REPRODUCE OR COPY IT
III NOT TO REVEAL OR PUBLISH IT IN WHOLE OR PART
IV ALL RIGHTS RESERVED

BRANCH evt-1

PAGE 44 OF 80

SHEET 34 OF 51

Romeo Power Filtering
PP_ROMEO_B_ANODE
PP_ROMEO_A_ANODE
PP_ROMEO_DENSE_ANODE
PP_ROMEO_SPARSE_ANODE
PP_ROMEO_CATHODE
PP3V3_SVDD
C4592 220PF 5% 10V C0G-CERM 01005 ROOM=B2B_PEARL
C4593 220PF 5% 10V C0G-CERM 01005 ROOM=B2B_PEARL
C4594 220PF 5% 10V C0G-CERM 01005 ROOM=B2B_PEARL
C4595 220PF 5% 10V C0G-CERM 01005 ROOM=B2B_PEARL
C4596 220PF 5% 10V C0G-CERM 01005 ROOM=B2B_PEARL
C4597 220PF 5% 10V C0G-CERM 01005 ROOM=B2B_PEARL
Romeo I/O
FL4554 150OHM-25%-200MA-0.7DCR 01005 ROOM=B2B_PEARL
OUT ROMEO_TO_AOP_B2B_DETECT
ROMEO_TO_AOP_B2B_DETECT_CONN
C4554 220PF 5% 10V C0G-CERM 01005 ROOM=B2B_PEARL
FL4555 150OHM-25%-200MA-0.7DCR 01005 ROOM=B2B_PEARL
OUT ROMEO_TO_RIGEL_VCSEL_NTC
ROMEO_TO_RIGEL_VCSEL_NTC_CONN
C4555 220PF 5% 10V C0G-CERM 01005 ROOM=B2B_PEARL
FL4556 150OHM-25%-200MA-0.7DCR 01005 ROOM=B2B_PEARL
IN MAMA_BEAR_BI_RIGEL_STATUS
MAMA_BEAR_BI_RIGEL_STATUS_CONN
C4556 220PF 5% 10V C0G-CERM 01005 ROOM=B2B_PEARL
ISP I2C3
IN I2C3_ISP_SCL
R4552 0.00 0% 1/32W MF 01005 ROOM=B2B_PEARL
I2C3_ISP_TO_MAMA_BEAR_SCL_CONN
CKPLUS_WAIVE=I2C_PULLUP
C4552 56PF 5% 25V NP0-C0G-CERM 01005 ROOM=B2B_PEARL
BI I2C3_ISP_SDA
R4553 0.00 0% 1/32W MF 01005 ROOM=B2B_PEARL
I2C3_ISP_BI_MAMA_BEAR_SDA_CONN
CKPLUS_WAIVE=I2C_PULLUP
C4553 56PF 5% 25V NP0-C0G-CERM 01005 ROOM=B2B_PEARL
Romeo Connector
Rcpt: 516S00267 <-- This one on MLB
Plug: 516S00268
J4500 AA36D-S010VA1 F-ST-SM
PWR SIGNAL PWR ROOM=B2B_PEARL
15 PP_ROMEO_DENSE_ANODE 16 PP_ROMEO_DENSE_ANODE
11 PP_ROMEO_CATHODE 12 PP_ROMEO_CATHODE
1 PP_ROMEO_B_ANODE 2
3 PP_ROMEO_A_ANODE 4 I2C3_ISP_TO_MAMA_BEAR_SCL_CONN
5 6 MAMA_BEAR_BI_RIGEL_STATUS_CONN
7 ROMEO_TO_AOP_B2B_DETECT_CONN 8 ROMEO_TO_RIGEL_VCSEL_NTC_CONN
9 I2C3_ISP_BI_MAMA_BEAR_SDA_CONN 10 PP3V3_SVDD
13 PP_ROMEO_CATHODE 14 PP_ROMEO_CATHODE
17 PP_ROMEO_SPARSE_ANODE 18 PP_ROMEO_SPARSE_ANODE
Juliet Power and I/O
PP1V1_CAM_TELE_JULIET_DVDD
XW4570 SHORT-01005 ROOM=B2B_PEARL
PP1V1_JULIET_DVDD_CONN
C4570 0.1UF 20% 6.3V X5R-CERM 01005 ROOM=B2B_PEARL
C4571 220PF 5% 10V C0G-CERM 01005 ROOM=B2B_PEARL
PP2V85_CAM_TELE_AVDD
FL4572 10-OHM-750MA 01005-1 ROOM=B2B_PEARL
PP2V85_JULIET_AVDD_CONN
C4572 0.1UF 20% 6.3V X5R-CERM 01005 ROOM=B2B_PEARL
C4573 220PF 5% 10V C0G-CERM 01005 ROOM=B2B_PEARL
PP1V8_IO
FL4574 10-OHM-750MA 01005-1 ROOM=B2B_PEARL
PP1V8_JULIET_VDDIO_CONN
C4574 0.1UF 20% 6.3V X5R-CERM 01005 ROOM=B2B_PEARL
C4575 220PF 5% 10V C0G-CERM 01005 ROOM=B2B_PEARL
IN AP_TO_JULIET_SHUTDOWN_L
R4560 0.00 0% 1/32W MF 01005 ROOM=B2B_PEARL
AP_TO_JULIET_SHUTDOWN_L_CONN
C4560 220PF 5% 10V C0G-CERM 01005 ROOM=B2B_PEARL
IN AP_TO_FCAM_JULIET_CLK
FL4561 150OHM-25%-200MA-0.7DCR 01005 ROOM=B2B_PEARL
AP_TO_JULIET_CLK_CONN
C4562 56PF 5% 25V NP0-C0G-CERM 01005 ROOM=B2B_PEARL
OUT JULIET_PMU_TO_RIGEL_STROBE
R4563 0.00 0% 1/32W MF 01005 ROOM=B2B_PEARL
JULIET_PMU_TO_RIGEL_STROBE_CONN
C4563 220PF 5% 10V C0G-CERM 01005 ROOM=B2B_PEARL
IN FCAM_TO_JULIET_SYNC_J4530
C4564 220PF 5% 10V C0G-CERM 01005 ROOM=B2B_PEARL
Juliet Connector
Rcpt: 516S00244 <-- This one on MLB
Plug: 516S00245
J4530 BB35K-RA18-3A F-ST-SM ROOM=B2B_PEARL
23
19 PP1V1_JULIET_DVDD_CONN 20
1 2 JULIET_PMU_TO_RIGEL_STROBE_CONN
3 90_MIPI_JULIET_TO_AP_DATA0_P 4 FCAM_TO_JULIET_SYNC_J4530
5 90_MIPI_JULIET_TO_AP_DATA0_N 6 PP2V85_JULIET_AVDD_CONN
7 8
9 90_MIPI_JULIET_TO_AP_CLK_P 10 PP1V8_JULIET_VDDIO_CONN
11 90_MIPI_JULIET_TO_AP_CLK_N 12 AP_TO_JULIET_SHUTDOWN_L_CONN
13 14 I2C2_ISP_BI_FCAM_SAVAGE_SDA_CONN BI
15 90_MIPI_JULIET_TO_AP_DATA1_P 16 I2C2_ISP_TO_FCAM_SAVAGE_SCL_CONN IN
17 90_MIPI_JULIET_TO_AP_DATA1_N 18 AP_TO_JULIET_CLK_CONN
21 22
24
8 7 6 5 4 3 2 1
D C B A

SYNC_MASTER=test_mlb
SYNC_DATE=10/13/2016

PAGE TITLE
PEARL: B2B Romeo + Juliet

DRAWING NUMBER
051-02221

SIZE
D

Apple Inc.

REVISION
9.0.0

BRANCH
evt-1

PAGE
45 OF 80

SHEET
35 OF 51

NOTICE OF PROPRIETARY PROPERTY:

THE INFORMATION CONTAINED HEREIN IS THE
PROPRIETARY PROPERTY OF APPLE INC.
THE POSESSOR AGREES TO THE FOLLOWING:
I TO MAINTAIN THIS DOCUMENT IN CONFIDENCE
II NOT TO REPRODUCE OR COPY IT
III NOT TO REVEAL OR PUBLISH IT IN WHOLE OR PART
IV ALL RIGHTS RESERVED

CHINAFIX
迅维职业技能培训中心
400-800-9990

AOP I2C
I2C0_AOP_SCL
R4600 0.00 1/32W MF 01005 ROOM=B2B_PEARL
I2C0_AOP_TO_PROX_ALS_YOGI_SCL_CONN
CKPLUS_WAIVE=I2C_PULLUP
C4600 56PF 5% 25V NP0-C0G-CERM 01005 ROOM=B2B_PEARL
I2C0_AOP_SDA
R4601 0.00 1/32W MF 01005 ROOM=B2B_PEARL
I2C0_AOP_BI_PROX_ALS_YOGI_SDA_CONN
C4601 56PF 5% 25V NP0-C0G-CERM 01005 ROOM=B2B_PEARL
Yogi Signals
YOGI_TO_RIGEL_STATUS
FL4650 150OHM-25%-200MA-0.7DCR 01005 ROOM=B2B_PEARL
YOGI_TO_RIGEL_STATUS_CONN
C4650 220PF 5% 10V C0G-CERM 01005 ROOM=B2B_PEARL
Rosaline + Misc Connector
Rcpt: 516S00325 <-- This one on MLB
Plug: 516S00326
J4600 AA26DK-S028VA1 F-ST-SM ROOM=B2B_PEARL
XW4600 SHORT-20L-0.05MM-SM ROOM=B2B_PEARL OMIT
FRONTMIC3_TO_CODEC_BIAS_FILT_RET
FRONTMIC3_TO_CODEC_AIN3_CONN_N
PP3V0_YOGI_PROX_ALS_CONN
PP_ROSALINE_ANODE
COIL_TO_SPKRAMP_TOP_VSENSE_POS_CONN
SPKRAMP_TOP_TO_COIL_OUT_NEG
CODEC_AOUT_TO_HAC_CONN_P
SPKRAMP_TOP_TO_COIL_OUT_POS
FRONTMIC3_TO_CODEC_AIN3_CONN_P
PP_CODEC_TO_FRONTMIC3_BIAS_CONN
YOGI_TO_RIGEL_STATUS_CONN
PROX_BI_AP_AOP_INT_CONN_L
I2C0_AOP_BI_PROX_ALS_YOGI_SDA_CONN
I2C0_AOP_TO_PROX_ALS_YOGI_SCL_CONN
ALS_TO_AOP_INT_CONN_L
PP_ROSALINE_ANODE
BB_TO_STROBE_DRIVER_GSM_BURST_IND_CONN
COIL_TO_SPKRAMP_TOP_VSENSE_NEG_CONN
SPKRAMP_TOP_TO_COIL_OUT_NEG
CODEC_AOUT_TO_HAC_CONN_N
SPKRAMP_TOP_TO_COIL_OUT_POS
SPEAKER2
SPKRAMP_TOP_TO_COIL_OUT_POS
SPKRAMP_TOP_TO_COIL_OUT_NEG
C4631 220PF 5% 10V C0G-CERM 01005 ROOM=B2B_PEARL
C4635 820PF 10% 10V X5R 01005 ROOM=B2B_PEARL
C4630 220PF 5% 10V C0G-CERM 01005 ROOM=B2B_PEARL
C4636 820PF 10% 10V X5R 01005 ROOM=B2B_PEARL
C4632 220PF 5% 10V C0G-CERM 01005 ROOM=B2B_PEARL
COIL_TO_SPKRAMP_TOP_VSENSE_POS
R4633 0.00 0% 1/32W MF 01005 ROOM=B2B_PEARL
COIL_TO_SPKRAMP_TOP_VSENSE_POS_CONN
C4633 NOSTUFF 220PF 5% 10V C0G-CERM 01005 ROOM=B2B_PEARL
PP_ROSALINE_ANODE
C4660 220PF 5% 10V C0G-CERM 01005 ROOM=B2B_PEARL
COIL_TO_SPKRAMP_TOP_VSENSE_NEG
R4634 0.00 0% 1/32W MF 01005 ROOM=B2B_PEARL
COIL_TO_SPKRAMP_TOP_VSENSE_NEG_CONN
C4634 NOSTUFF 220PF 5% 10V C0G-CERM 01005 ROOM=B2B_PEARL
PROX & ALS POWER
PP3V0_S2
R4611 0.00 0% 1/32W MF 01005 ROOM=B2B_PEARL
PP3V0_YOGI_PROX_ALS_CONN
C4613 OMIT_TABLE 2.2UF 20% 6.3V X5R-CERM 0201 ROOM=B2B_PEARL
C4614 220PF 5% 10V C0G-CERM 01005 ROOM=B2B_PEARL
MIC3
PP_CODEC_TO_FRONTMIC3_BIAS
FL4640 150OHM-25%-200MA-0.7DCR 01005 ROOM=B2B_PEARL
PP_CODEC_TO_FRONTMIC3_BIAS_CONN
DZ4640 6.8V-100PF 01005 ROOM=B2B_PEARL
FRONTMIC3_TO_CODEC_AIN3_N
FL4641 150OHM-25%-200MA-0.7DCR 01005 ROOM=B2B_PEARL
FRONTMIC3_TO_CODEC_AIN3_CONN_N
DZ4641 6.8V-100PF 01005 ROOM=B2B_PEARL
FRONTMIC3_TO_CODEC_AIN3_P
FL4642 150OHM-25%-200MA-0.7DCR 01005 ROOM=B2B_PEARL
FRONTMIC3_TO_CODEC_AIN3_CONN_P
DZ4642 6.8V-100PF 01005 ROOM=B2B_PEARL
CODEC_AOUT_TO_HAC_P
FL4643 150OHM-25%-200MA-0.7DCR 01005 ROOM=B2B_PEARL
CODEC_AOUT_TO_HAC_CONN_P
DZ4643 6.8V-100PF 01005 ROOM=B2B_PEARL
CODEC_AOUT_TO_HAC_N
FL4644 150OHM-25%-200MA-0.7DCR 01005 ROOM=B2B_PEARL
CODEC_AOUT_TO_HAC_CONN_N
DZ4644 6.8V-100PF 01005 ROOM=B2B_PEARL
PROX/ALS I/O
PROX_BI_AP_AOP_INT_L
R4617 240 1% 1/32W MF 01005 ROOM=B2B_PEARL
PROX_BI_AP_AOP_INT_CONN_L
C4617 220PF 5% 10V C0G-CERM 01005 ROOM=B2B_PEARL
ALS_TO_AOP_INT_L
FL4618 150OHM-25%-200MA-0.7DCR 01005 ROOM=B2B_PEARL
ALS_TO_AOP_INT_CONN_L
C4618 220PF 5% 10V C0G-CERM 01005 ROOM=B2B_PEARL
BB_TO_STROBE_DRIVER_GSM_BURST_IND
FL4619 NOSTUFF 150OHM-25%-200MA-0.7DCR 01005 ROOM=B2B_PEARL
BB_TO_STROBE_DRIVER_GSM_BURST_IND_CONN
R4619 0.00 0% 1/32W MF 01005 ROOM=B2B_PEARL
8 7 6 5 4 3 2 1
D C B A

SYNC_MASTER=test_mlb SYNC_DATE=10/13/2016

PAGE TITLE
PEARL: B2B Rosaline + Misc

Apple Inc.

DRAWING NUMBER 051-02221
SIZE D
REVISION [illegible]
BRANCH evt-1
PAGE 46 OF 80
SHEET 36 OF 51

NOTICE OF PROPRIETARY PROPERTY:

THE INFORMATION CONTAINED HEREIN IS THE PROPRIETARY PROPERTY OF APPLE INC. THE POSESSOR AGREES TO THE FOLLOWING:

I TO MAINTAIN THIS DOCUMENT IN CONFIDENCE
II NOT TO REPRODUCE OR COPY IT
III NOT TO REVEAL OR PUBLISH IT IN WHOLE OR PART
IV ALL RIGHTS RESERVED

CALLAN AUDIO CODEC (ANALOG INPUTS & OUTPUTS)

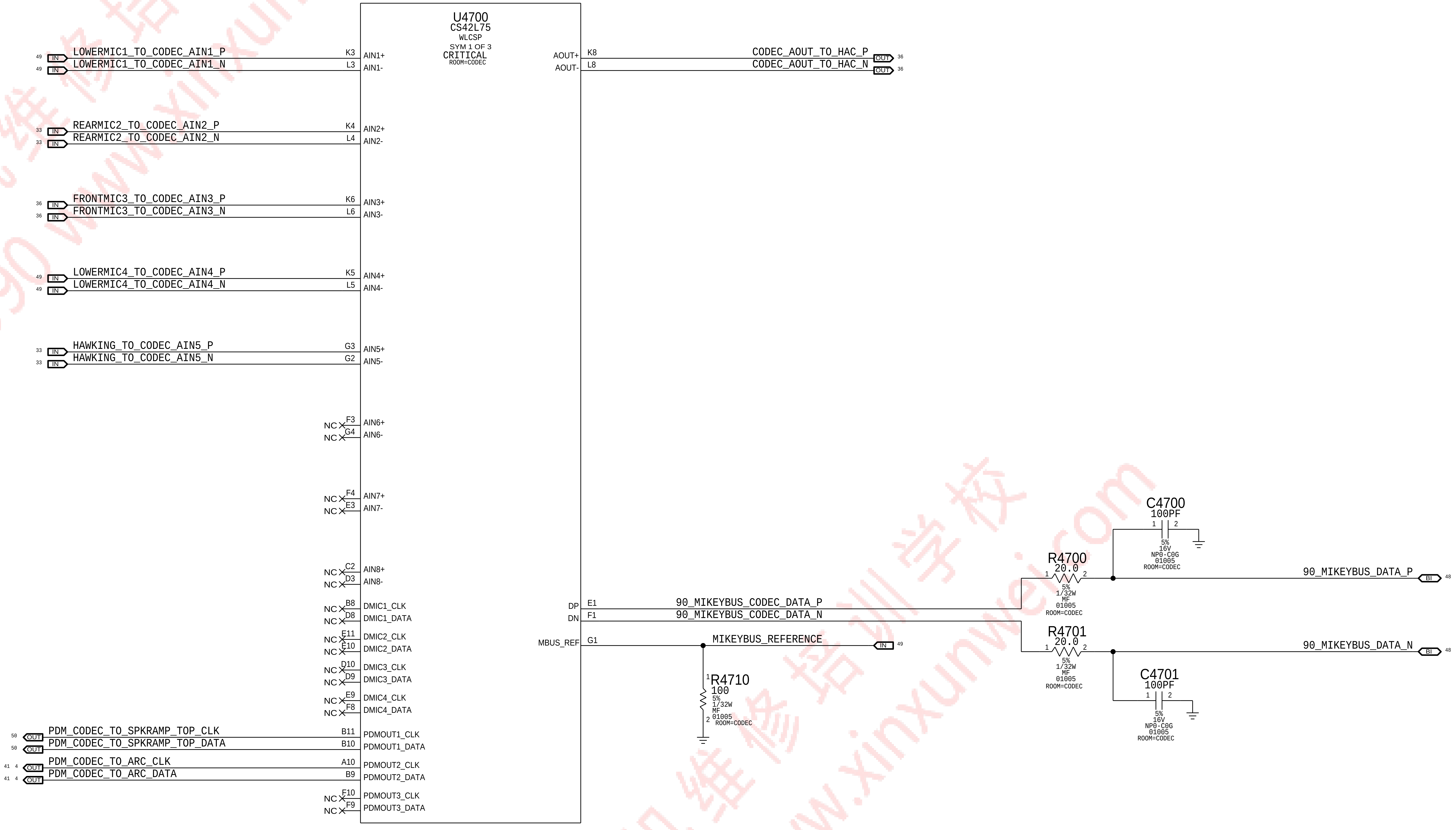
U4700
CS42L75
WLCSP
SYM 1 OF 3
CRITICAL
ROOM=CODEC
49 IN LOWERMIC1_TO_CODEC_AIN1_P K3 AIN1+
49 IN LOWERMIC1_TO_CODEC_AIN1_N L3 AIN1-
33 IN REARMIC2_TO_CODEC_AIN2_P K4 AIN2+
33 IN REARMIC2_TO_CODEC_AIN2_N L4 AIN2-
36 IN FRONTMIC3_TO_CODEC_AIN3_P K6 AIN3+
36 IN FRONTMIC3_TO_CODEC_AIN3_N L6 AIN3-
49 IN LOWERMIC4_TO_CODEC_AIN4_P K5 AIN4+
49 IN LOWERMIC4_TO_CODEC_AIN4_N L5 AIN4-
33 IN HAWKING_TO_CODEC_AIN5_P G3 AIN5+
33 IN HAWKING_TO_CODEC_AIN5_N G2 AIN5-
NC F3 AIN6+
NC G4 AIN6-
NC F4 AIN7+
NC E3 AIN7-
NC C2 AIN8+
NC D3 AIN8-
NC B8 DMIC1_CLK
NC D8 DMIC1_DATA
NC E11 DMIC2_CLK
NC E10 DMIC2_DATA
NC D10 DMIC3_CLK
NC D9 DMIC3_DATA
NC E9 DMIC4_CLK
NC F8 DMIC4_DATA
50 OUT PDM_CODEC_TO_SPKRAMP_TOP_CLK B11 PDMOUT1_CLK
50 OUT PDM_CODEC_TO_SPKRAMP_TOP_DATA B10 PDMOUT1_DATA
41 4 OUT PDM_CODEC_TO_ARC_CLK A10 PDMOUT2_CLK
41 4 OUT PDM_CODEC_TO_ARC_DATA B9 PDMOUT2_DATA
NC F10 PDMOUT3_CLK
NC F9 PDMOUT3_DATA
AOUT+ K8 CODEC_AOUT_TO_HAC_P OUT 36
AOUT- L8 CODEC_AOUT_TO_HAC_N OUT 36
DP E1 90_MIKEYBUS_CODEC_DATA_P
DN F1 90_MIKEYBUS_CODEC_DATA_N
MBUS_REF G1 MIKEYBUS_REFERENCE IN 49
R4710
100
5%
1/32W
MF
01005
ROOM=CODEC
R4700
20.0
5%
1/32W
MF
01005
ROOM=CODEC
R4701
20.0
5%
1/32W
MF
01005
ROOM=CODEC
C4700
100PF
5%
16V
NP0-C0G
01005
ROOM=CODEC
C4701
100PF
5%
16V
NP0-C0G
01005
ROOM=CODEC
90_MIKEYBUS_DATA_P BI 48
90_MIKEYBUS_DATA_N BI 48

SYNC_MASTER=test_mlb
SYNC_DATE=10/13/2016

PAGE TITLE
AUDIO: CODEC (1/2)

Apple Inc.

DRAWING NUMBER	SIZE
051-02221	D

REVISION
9.0.0

BRANCH
evt-1

PAGE
47 OF 80

SHEET
37 OF 51

NOTICE OF PROPRIETARY PROPERTY:

THE INFORMATION CONTAINED HEREIN IS THE PROPRIETARY PROPERTY OF APPLE INC.
THE POSESSOR AGREES TO THE FOLLOWING:

I TO MAINTAIN THIS DOCUMENT IN CONFIDENCE
II NOT TO REPRODUCE OR COPY IT
III NOT TO REVEAL OR PUBLISH IT IN WHOLE OR PART
IV ALL RIGHTS RESERVED

CALLAN AUDIO CODEC (POWER & I/O)

PP1V8_AUDIO_VA_S2
C4809 2.2UF 20% 6.3V X5R-CERM 0201 OMIT_TABLE ROOM=CODEC
CODEC_AGND
PP_VDD_BOOST
C4812 0.1UF 20% 6.3V X5R-CERM 01005 ROOM=CODEC
C4814 0.1UF 20% 6.3V X5R-CERM 01005 ROOM=CODEC
C4805 2.2UF 20% 6.3V X5R-CERM 0201 OMIT_TABLE ROOM=CODEC
PP1V8_S2
C4811 10UF 20% 10V X5R-CERM 0402-0.1MM OMIT_TABLE ROOM=CODEC
C4813 0.1UF 20% 6.3V X5R-CERM 01005 ROOM=CODEC
C4815 0.1UF 20% 6.3V X5R-CERM 01005 ROOM=CODEC
PP1V2_CODEC_S2
C4817 1.0UF 20% 6.3V X5R 0201-1 ROOM=CODEC
C4821 1.0UF 20% 6.3V X5R 0201-1 ROOM=CODEC
LOWERMIC1_TO_CODEC_BIAS_FILT_RET
C4803 4.7UF 20% 6.3V X5R-CERM1 402
PP_CODEC_TO_LOWERMIC1_BIAS
LOWERMIC1_BIAS_FILT_IN
REARMIC2_TO_CODEC_BIAS_FILT_RET
C4804 4.7UF 20% 6.3V X5R-CERM1 402
PP_CODEC_TO_REARMIC2_BIAS
REARMIC2_BIAS_FILT_IN
FRONTMIC3_TO_CODEC_BIAS_FILT_RET
C4801 4.7UF 20% 6.3V X5R-CERM1 402
PP_CODEC_TO_FRONTMIC3_BIAS
FRONTMIC3_BIAS_FILT_IN
LOWERMIC4_TO_CODEC_BIAS_FILT_RET
C4802 4.7UF 20% 6.3V X5R-CERM1 402
PP_CODEC_TO_LOWERMIC4_BIAS
LOWERMIC4_BIAS_FILT_IN
C4823 1.0UF 20% 6.3V X5R 0201-1 ROOM=CODEC
C4824 1.0UF 20% 6.3V X5R 0201-1 ROOM=CODEC
C4822 1.0UF 20% 6.3V X5R 0201-1 ROOM=CODEC
C4825 1.0UF 20% 6.3V X5R 0201-1 ROOM=CODEC
CRITICAL
U4700 CS42L75 WLCSP SYM 2 OF 3
VL_SW VD VD_FILT VD_FILT VL VP VA VA VA VP_MBUS
A2 C1 B1 G11 A9 L9 J1 J2 K2 F2
MIC1_BIAS MIC1_BIAS_FILT MIC2_BIAS MIC2_BIAS_FILT MIC3_BIAS MIC3_BIAS_FILT MIC4_BIAS MIC4_BIAS_FILT MIC5_BIAS MIC5_BIAS_FILT MIC6_BIAS MIC6_BIAS_FILT
K11 K10 J11 J10 K9 J9 H9 H8 H11 H10 G8 G9
NC
LP_FILT+ LP_FILT- FILT+ FILT-
D1 D2 K1 L2
CODEC_LP_FILTP
CODEC_LP_FILTN
C4820 0.1UF 20% 6.3V X5R-CERM 01005 ROOM=CODEC
CODEC_FILTP
C4808 10UF 20% 10V X5R-CERM 0402-0.1MM OMIT_TABLE ROOM=CODEC
GNDD GNDP
A1 A8 A11 E2 F11 K7 L1 L7 L10 L11
XW4802 SHORT-10L-0.1MM-SM ROOM=CODEC
CODEC_AGND
CODEC_TO_SPKRAMP_BOT_ARC_MCLK
R4830 33.2 1% 1/32W MF 01005 ROOM=CODEC
I2S_AOP_AMPS_TO_CODEC_ASP1_DOUT
R4831 49.9 1% 1/32W MF 01005 ROOM=CODEC
PP1V8_S2
R4800 100K 5% 1/32W MF 01005 ROOM=CODEC
U4700 CS42L75 WLCSP SYM 3 OF 3
ROOM=CODEC CRITICAL
AOP_TO_CODEC_RESET_L
CODEC_TO_PMU_WAKE
CODEC_TO_AP_INT_L
SPI_AP_TO_CODEC_CS_L
SPI_AP_TO_CODEC_SCLK
SPI_AP_TO_CODEC_MOSI
SPI_CODEC_TO_AP_MISO
I2S_AP_TO_CODEC_MCLK1
I2S_AOP_TO_CODEC_MCLK2
CODEC_TO_SPKRAMP_BOT_ARC_MCLK_R
I2S_CODEC_ASP1_TO_AOP_AMPS_BCLK
I2S_CODEC_ASP1_TO_AOP_AMPS_LRCLK
I2S_AOP_AMPS_TO_CODEC_ASP1_DOUT_R
I2S_CODEC_ASP1_TO_AOP_AMPS_DIN
I2S_AOP_TO_CODEC_ASP2_BCLK
I2S_AOP_TO_CODEC_ASP2_LRCLK
I2S_AOP_TO_CODEC_ASP2_DOUT
I2S_CODEC_ASP2_TO_AOP_DIN
I2S_AP_TO_CODEC_ASP3_BCLK
I2S_AP_TO_CODEC_ASP3_LRCLK
I2S_AP_TO_CODEC_ASP3_DOUT
I2S_CODEC_ASP3_TO_AP_DIN
CODEC_TO_AOP_GPIO1
CODEC_TO_AOP_GPIO2
AOP_TO_CODEC_CLP_EN
RESET* WAKE* INT* CS* CCLK MOSI MISO MCLK1_IN MCLK2_IN MCLK_OUT
ASP1_SCLK ASP1_LRCK/FSYNC ASP1_SDIN ASP1_SDOUT
ASP2_SCLK ASP2_LRCK/FSYNC ASP2_SDIN ASP2_SDOUT
ASP3_SCLK ASP3_LRCK/FSYNC ASP3_SDIN ASP3_SDOUT
DIGLDO_PULLDN DIGLDO_EN SW1_CLK SW1_SD SW2_CLK SW2_SD GPIO1 GPIO2 CLP_EN
J4 H3 D4 C7 A7 C8 B7 A4 B4 A5 A6 C6 B5 B6 C4 D5 D6 C5 C11 C9 C10 D11 H4 H5 A3 C3 B3 B2 E6 E5 F6
JTAG_TMS JTAG_TCK JTAG_TDI JTAG_TDO
E7 D7 E8 F7
TSTI TSTI TSTI
G10 J3 J5
GNDA
F5 G5 G6 G7 H1 H2 H6 H7 J6 J7 J8 E4
IN OUT
NC

PAGE TITLE

AUDIO: CODEC (2/2)

DRAWING NUMBER 051-02221

SIZE D

Apple Inc.

NOTICE OF PROPRIETARY PROPERTY:

THE INFORMATION CONTAINED HEREIN IS THE PROPRIETARY PROPERTY OF APPLE INC. THE POSESSOR AGREES TO THE FOLLOWING:

I TO MAINTAIN THIS DOCUMENT IN CONFIDENCE

II NOT TO REPRODUCE OR COPY IT

III NOT TO REVEAL OR PUBLISH IT IN WHOLE OR PART

IV ALL RIGHTS RESERVED

BRANCH evt-1

48 OF 80

SHEET 38 OF 51

D

C

South Speaker Amplifier on MLB Bottom

B

A

SYNC_DATE=08/25/2015

PAGE TITLE

AUDIO: Speaker Amp Bottom

Apple Inc.	DRAWING NUMBER 051-02221	SIZE D
	REVISION 9.0.0	
NOTICE OF PROPRIETARY PROPERTY: THE INFORMATION CONTAINED HEREIN IS THE PROPRIETARY PROPERTY OF APPLE INC. THE POSESSOR AGREES TO THE FOLLOWING: I TO MAINTAIN THIS DOCUMENT IN CONFIDENCE II NOT TO REPRODUCE OR COPY IT III NOT TO REVEAL OR PUBLISH IT IN WHOLE OR PART IV ALL RIGHTS RESERVED	BRANCH evt-1	
	PAGE 49 OF 80	
	SHEET 39 OF 51	

North Speaker Amplifier on MLB Bottom

SYNC_DATE=08/25/2015

PAGE TITLE
AUDIO: Speaker Amp Top

Apple Inc.

DRAWING NUMBER	SIZE
051-02221	D

REVISION
9.0.0

BRANCH
evt-1

PAGE
50 OF 80

SHEET
40 OF 51

NOTICE OF PROPRIETARY PROPERTY:

THE INFORMATION CONTAINED HEREIN IS THE PROPRIETARY PROPERTY OF APPLE INC.
THE POSESSOR AGREES TO THE FOLLOWING:
I TO MAINTAIN THIS DOCUMENT IN CONFIDENCE
II NOT TO REPRODUCE OR COPY IT
III NOT TO REVEAL OR PUBLISH IT IN WHOLE OR PART
IV ALL RIGHTS RESERVED

ARC DRIVER

APN: 338S00296

I2C ADDRESS: 1000 001x

0x82

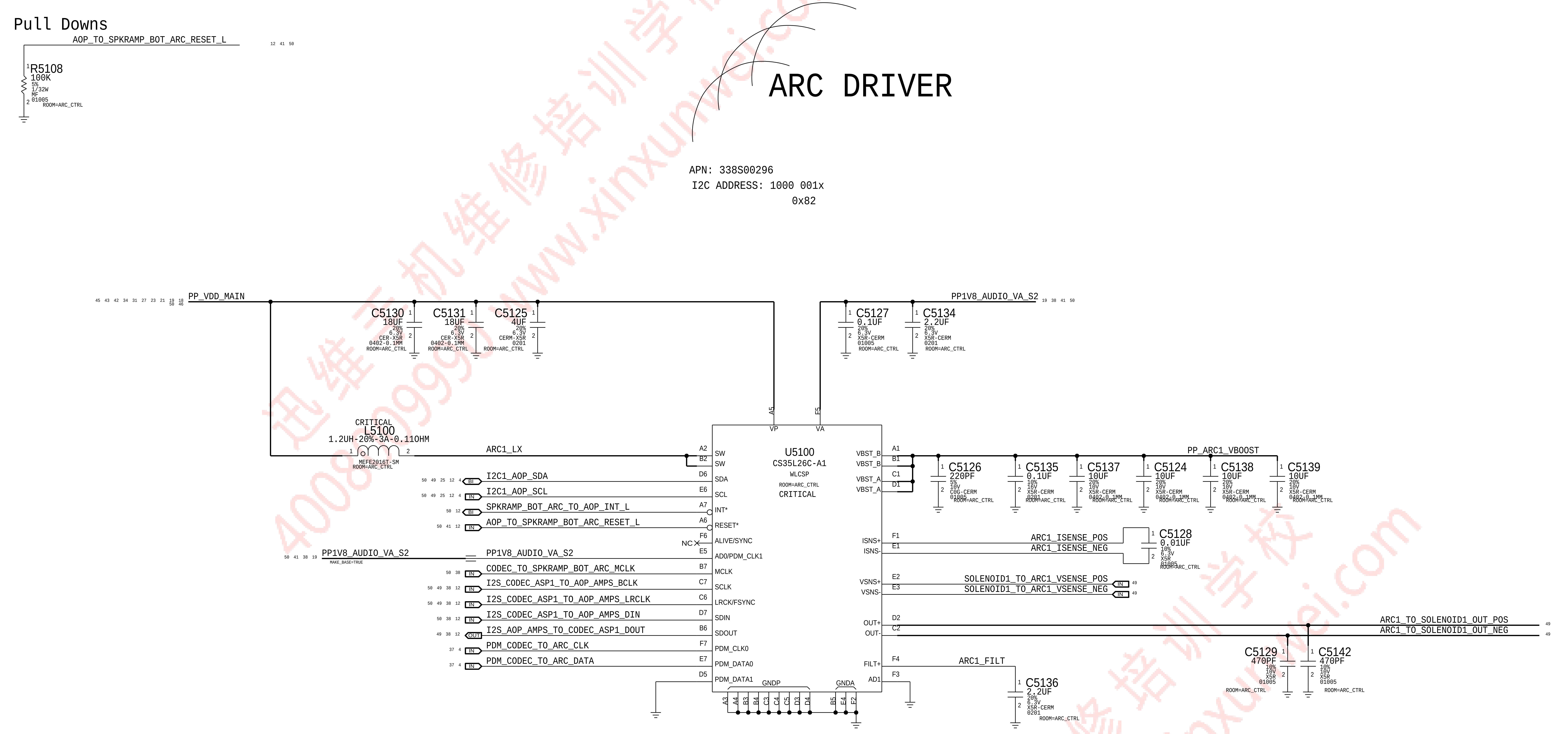

Pull Downs
AOP_TO_SPKRAMP_BOT_ARC_RESET_L
12 41 50
R5108
100K
5%
1/32W
MF
01005
ROOM=ARC_CTRL
45 43 42 34 31 27 23 21 19 18 50 46
PP_VDD_MAIN
C5130
18UF
20%
6.3V
CER-X5R
0402-0.1MM
ROOM=ARC_CTRL
C5131
18UF
20%
6.3V
CER-X5R
0402-0.1MM
ROOM=ARC_CTRL
C5125
4UF
20%
6.3V
CERM-X5R
0201
ROOM=ARC_CTRL
PP1V8_AUDIO_VA_S2
19 38 41 50
C5127
0.1UF
20%
6.3V
X5R-CERM
01005
ROOM=ARC_CTRL
C5134
2.2UF
20%
6.3V
X5R-CERM
0201
ROOM=ARC_CTRL
CRITICAL
L5100
1.2UH-20%-3A-0.11OHM
MEFE2016T-SM
ROOM=ARC_CTRL
ARC1_LX
50 49 25 12 4 BI I2C1_AOP_SDA
50 49 25 12 4 IN I2C1_AOP_SCL
50 12 BI SPKRAMP_BOT_ARC_TO_AOP_INT_L
50 41 12 IN AOP_TO_SPKRAMP_BOT_ARC_RESET_L
50 41 38 19 PP1V8_AUDIO_VA_S2
MAKE_BASE=TRUE
PP1V8_AUDIO_VA_S2
50 38 IN CODEC_TO_SPKRAMP_BOT_ARC_MCLK
50 49 38 12 IN I2S_CODEC_ASP1_TO_AOP_AMPS_BCLK
50 49 38 12 IN I2S_CODEC_ASP1_TO_AOP_AMPS_LRCLK
50 38 12 IN I2S_CODEC_ASP1_TO_AOP_AMPS_DIN
49 38 12 OUT I2S_AOP_AMPS_TO_CODEC_ASP1_DOUT
37 4 IN PDM_CODEC_TO_ARC_CLK
37 4 IN PDM_CODEC_TO_ARC_DATA
NC
U5100
CS35L26C-A1
WLCSP
ROOM=ARC_CTRL
CRITICAL
A5 VP
F5 VA
A2 SW
B2 SW
D6 SDA
E6 SCL
A7 INT*
A6 RESET*
F6 ALIVE/SYNC
E5 AD0/PDM_CLK1
B7 MCLK
C7 SCLK
C6 LRCK/FSYNC
D7 SDIN
B6 SDOUT
F7 PDM_CLK0
E7 PDM_DATA0
D5 PDM_DATA1
GNDP
A3 A4 B3 B4 C3 C4 C5 D3 D4
GNDA
B5 E4 F2
VBST_B A1
VBST_B B1
VBST_A C1
VBST_A D1
ISNS+ F1
ISNS- E1
VSNS+ E2
VSNS- E3
OUT+ D2
OUT- C2
FILT+ F4
AD1 F3
PP_ARC1_VBOOST
C5126
220PF
5%
10V
C0G-CERM
01005
ROOM=ARC_CTRL
C5135
0.1UF
10%
16V
X5R-CERM
0201
ROOM=ARC_CTRL
C5137
10UF
20%
10V
X5R-CERM
0402-0.1MM
ROOM=ARC_CTRL
C5124
10UF
20%
10V
X5R-CERM
0402-0.1MM
ROOM=ARC_CTRL
C5138
10UF
20%
10V
X5R-CERM
0402-0.1MM
ROOM=ARC_CTRL
C5139
10UF
20%
10V
X5R-CERM
0402-0.1MM
ROOM=ARC_CTRL
ARC1_ISENSE_POS
ARC1_ISENSE_NEG
C5128
0.01UF
10%
6.3V
X5R
01005
ROOM=ARC_CTRL
SOLENOID1_TO_ARC1_VSENSE_POS IN 49
SOLENOID1_TO_ARC1_VSENSE_NEG IN 49
ARC1_TO_SOLENOID1_OUT_POS 49
ARC1_TO_SOLENOID1_OUT_NEG 49
C5129
470PF
10%
10V
X5R
01005
ROOM=ARC_CTRL
C5142
470PF
10%
10V
X5R
01005
ROOM=ARC_CTRL
ARC1_FILT
C5136
2.2UF
20%
6.3V
X5R-CERM
0201
ROOM=ARC_CTRL

SYNC_MASTER=test_mlb

SYNC_DATE=10/13/2016

PAGE TITLE

ARC: Driver

Apple Inc.

DRAWING NUMBER	051-02221
SIZE	D
REVISION	9.0.0
BRANCH	evt-1
PAGE	51 OF 80
SHEET	41 OF 51

NOTICE OF PROPRIETARY PROPERTY:

THE INFORMATION CONTAINED HEREIN IS THE PROPRIETARY PROPERTY OF APPLE INC.
THE POSESSOR AGREES TO THE FOLLOWING:

I TO MAINTAIN THIS DOCUMENT IN CONFIDENCE

II NOT TO REPRODUCE OR COPY IT

III NOT TO REVEAL OR PUBLISH IT IN WHOLE OR PART

IV ALL RIGHTS RESERVED

迅维职业技能培训中心 400-800-9990 www.xinxunwei.com 迅维手机维修培训学校

Acorn PMU

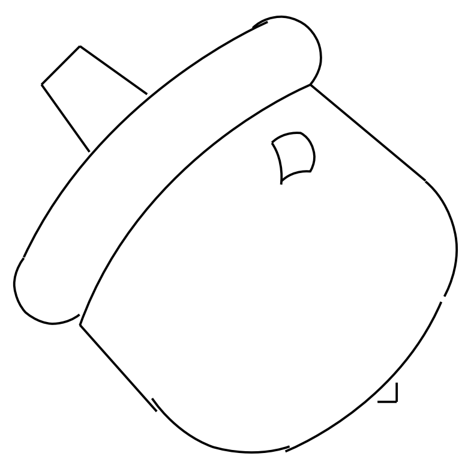

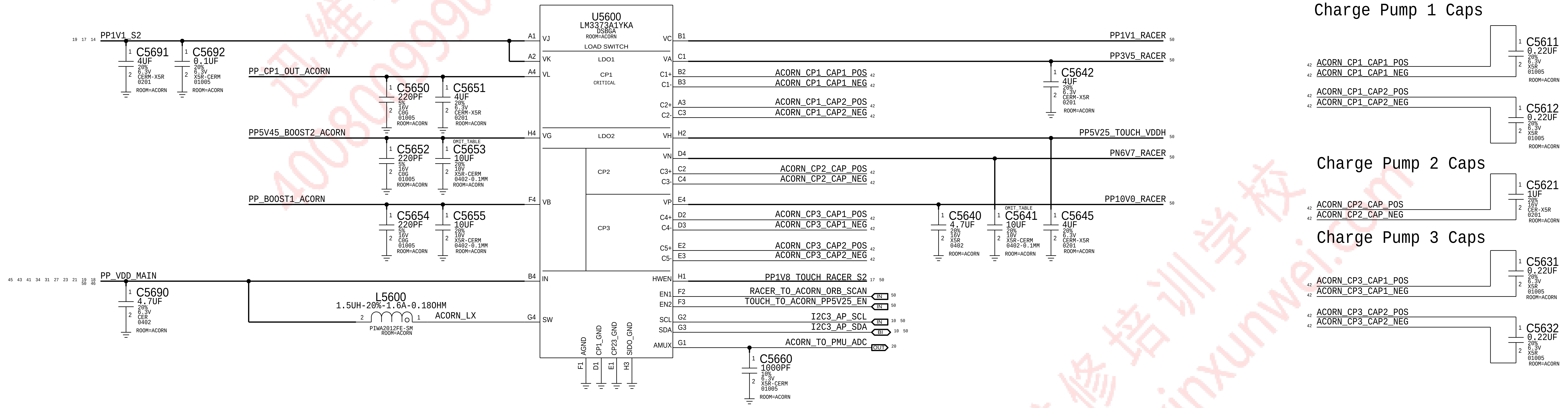
19 17 14
PP1V1_S2
C5691
4UF
20%
6.3V
CERM-X5R
0201
ROOM=ACORN
C5692
0.1UF
20%
6.3V
X5R-CERM
01005
ROOM=ACORN
PP_CP1_OUT_ACORN
C5650
220PF
5%
16V
C0G
01005
ROOM=ACORN
C5651
4UF
20%
6.3V
CERM-X5R
0201
ROOM=ACORN
PP5V45_BOOST2_ACORN
C5652
220PF
5%
16V
C0G
01005
ROOM=ACORN
OMIT_TABLE
C5653
10UF
20%
10V
X5R-CERM
0402-0.1MM
ROOM=ACORN
PP_BOOST1_ACORN
C5654
220PF
5%
16V
C0G
01005
ROOM=ACORN
C5655
10UF
20%
10V
X5R-CERM
0402-0.1MM
ROOM=ACORN
45 43 41 34 31 27 23 21 19 18 50 46
PP_VDD_MAIN
C5690
4.7UF
20%
6.3V
CER
0402
ROOM=ACORN
L5600
1.5UH-20%-1.6A-0.18OHM
PIWA2012FE-SM
ROOM=ACORN
ACORN_LX
U5600
LM3373A1YKA
DSBGA
ROOM=ACORN
LOAD SWITCH
LDO1
CP1
CRITICAL
LDO2
CP2
CP3
A1 VJ
A2 VK
A4 VL
H4 VG
F4 VB
B4 IN
G4 SW
AGND F1
CP1_GND D1
CP23_GND E1
SIDO_GND H3
VC B1
VA C1
C1+ B2
C1- B3
C2+ A3
C2- C3
VH H2
VN D4
C3+ C2
C3- C4
VP E4
C4+ D2
C4- D3
C5+ E2
C5- E3
HWEN H1
EN1 F2
EN2 F3
SCL G2
SDA G3
AMUX G1
PP1V1_RACER 50
PP3V5_RACER 50
ACORN_CP1_CAP1_POS 42
ACORN_CP1_CAP1_NEG 42
ACORN_CP1_CAP2_POS 42
ACORN_CP1_CAP2_NEG 42
PP5V25_TOUCH_VDDH 50
PN6V7_RACER 50
ACORN_CP2_CAP_POS 42
ACORN_CP2_CAP_NEG 42
PP10V0_RACER 50
ACORN_CP3_CAP1_POS 42
ACORN_CP3_CAP1_NEG 42
ACORN_CP3_CAP2_POS 42
ACORN_CP3_CAP2_NEG 42
PP1V8_TOUCH_RACER_S2 17 50
RACER_TO_ACORN_ORB_SCAN IN 50
TOUCH_TO_ACORN_PP5V25_EN IN 50
I2C3_AP_SCL IN 10 50
I2C3_AP_SDA BI 10 50
ACORN_TO_PMU_ADC OUT 20
C5660
1000PF
10%
6.3V
X5R-CERM
01005
ROOM=ACORN
C5642
4UF
20%
6.3V
CERM-X5R
0201
ROOM=ACORN
C5640
4.7UF
20%
16V
X5R
0402
ROOM=ACORN
OMIT_TABLE
C5641
10UF
20%
10V
X5R-CERM
0402-0.1MM
ROOM=ACORN
C5645
4UF
20%
6.3V
CERM-X5R
0201
ROOM=ACORN
Charge Pump 1 Caps
42 ACORN_CP1_CAP1_POS
42 ACORN_CP1_CAP1_NEG
C5611
0.22UF
20%
6.3V
X5R
01005
ROOM=ACORN
42 ACORN_CP1_CAP2_POS
42 ACORN_CP1_CAP2_NEG
C5612
0.22UF
20%
6.3V
X5R
01005
ROOM=ACORN
Charge Pump 2 Caps
42 ACORN_CP2_CAP_POS
42 ACORN_CP2_CAP_NEG
C5621
1UF
20%
16V
CER-X5R
0201
ROOM=ACORN
Charge Pump 3 Caps
42 ACORN_CP3_CAP1_POS
42 ACORN_CP3_CAP1_NEG
C5631
0.22UF
20%
6.3V
X5R
01005
ROOM=ACORN
42 ACORN_CP3_CAP2_POS
42 ACORN_CP3_CAP2_NEG
C5632
0.22UF
20%
6.3V
X5R
01005
ROOM=ACORN

SYNC_MASTER=test_mlb SYNC_DATE=10/13/2016

PAGE TITLE
CG: Power Supplies - Touch & Display

DRAWING NUMBER	051-02221
SIZE	D
REVISION	9.0.0
BRANCH	evt-1
PAGE	56 OF 80
SHEET	42 OF 51

Apple Inc.

NOTICE OF PROPRIETARY PROPERTY:

THE INFORMATION CONTAINED HEREIN IS THE PROPRIETARY PROPERTY OF APPLE INC.
THE POSESSOR AGREES TO THE FOLLOWING:

I TO MAINTAIN THIS DOCUMENT IN CONFIDENCE
II NOT TO REPRODUCE OR COPY IT
III NOT TO REVEAL OR PUBLISH IT IN WHOLE OR PART
IV ALL RIGHTS RESERVED

Display Control Signals

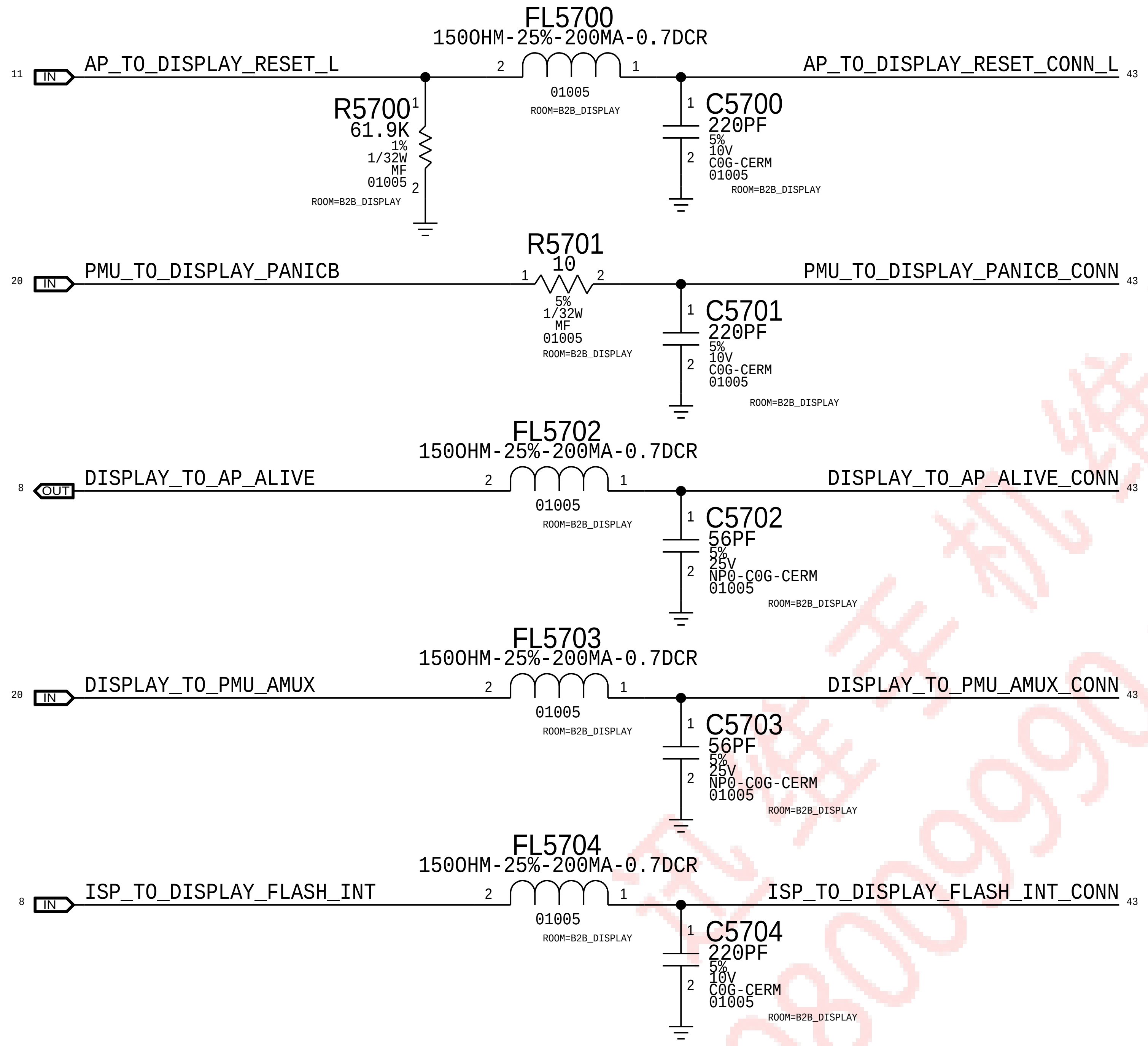
FL5700
150OHM-25%-200MA-0.7DCR
01005
ROOM=B2B_DISPLAY
11 IN AP_TO_DISPLAY_RESET_L
AP_TO_DISPLAY_RESET_CONN_L 43
R5700
61.9K
1%
1/32W
MF
01005
C5700
220PF
5%
10V
C0G-CERM
01005
R5701
10
5%
1/32W
MF
01005
20 IN PMU_TO_DISPLAY_PANICB
PMU_TO_DISPLAY_PANICB_CONN 43
C5701
220PF
FL5702
150OHM-25%-200MA-0.7DCR
8 OUT DISPLAY_TO_AP_ALIVE
DISPLAY_TO_AP_ALIVE_CONN 43
C5702
56PF
5%
25V
NP0-C0G-CERM
01005
FL5703
150OHM-25%-200MA-0.7DCR
20 IN DISPLAY_TO_PMU_AMUX
DISPLAY_TO_PMU_AMUX_CONN 43
C5703
56PF
5%
25V
NP0-C0G-CERM
01005
FL5704
150OHM-25%-200MA-0.7DCR
8 IN ISP_TO_DISPLAY_FLASH_INT
ISP_TO_DISPLAY_FLASH_INT_CONN 43
C5704
220PF
5%
10V
C0G-CERM
01005
ROOM=B2B_DISPLAY

Display Flex Connector

Rcpt: 516S00210 <-- This one on MLB
Plug: 516S00211

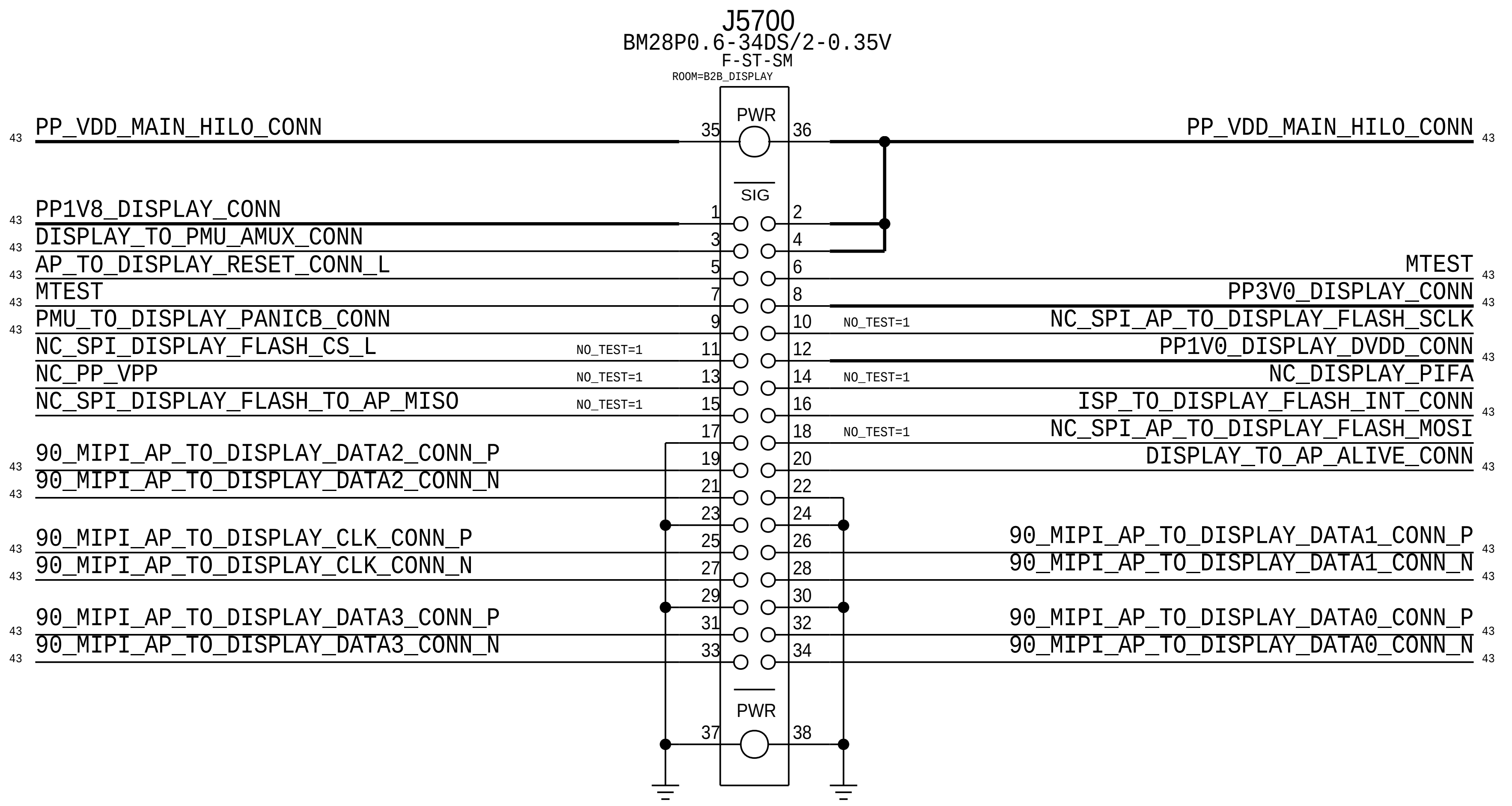
J5700
BM28P0.6-34DS/2-0.35V
F-ST-SM
ROOM=B2B_DISPLAY
PWR
SIG
PWR
35 PP_VDD_MAIN_HILO_CONN
36 PP_VDD_MAIN_HILO_CONN
1 PP1V8_DISPLAY_CONN
3 DISPLAY_TO_PMU_AMUX_CONN
5 AP_TO_DISPLAY_RESET_CONN_L
7 MTEST
9 PMU_TO_DISPLAY_PANICB_CONN
11 NC_SPI_DISPLAY_FLASH_CS_L NO_TEST=1
13 NC_PP_VPP NO_TEST=1
15 NC_SPI_DISPLAY_FLASH_TO_AP_MISO NO_TEST=1
19 90_MIPI_AP_TO_DISPLAY_DATA2_CONN_P
21 90_MIPI_AP_TO_DISPLAY_DATA2_CONN_N
25 90_MIPI_AP_TO_DISPLAY_CLK_CONN_P
27 90_MIPI_AP_TO_DISPLAY_CLK_CONN_N
31 90_MIPI_AP_TO_DISPLAY_DATA3_CONN_P
33 90_MIPI_AP_TO_DISPLAY_DATA3_CONN_N
6 MTEST
8 PP3V0_DISPLAY_CONN
10 NO_TEST=1 NC_SPI_AP_TO_DISPLAY_FLASH_SCLK
12 PP1V0_DISPLAY_DVDD_CONN
14 NO_TEST=1 NC_DISPLAY_PIFA
16 ISP_TO_DISPLAY_FLASH_INT_CONN
18 NO_TEST=1 NC_SPI_AP_TO_DISPLAY_FLASH_MOSI
20 DISPLAY_TO_AP_ALIVE_CONN
26 90_MIPI_AP_TO_DISPLAY_DATA1_CONN_P
28 90_MIPI_AP_TO_DISPLAY_DATA1_CONN_N
32 90_MIPI_AP_TO_DISPLAY_DATA0_CONN_P
34 90_MIPI_AP_TO_DISPLAY_DATA0_CONN_N
17 23 29 37 22 24 30 38

Display MIPI

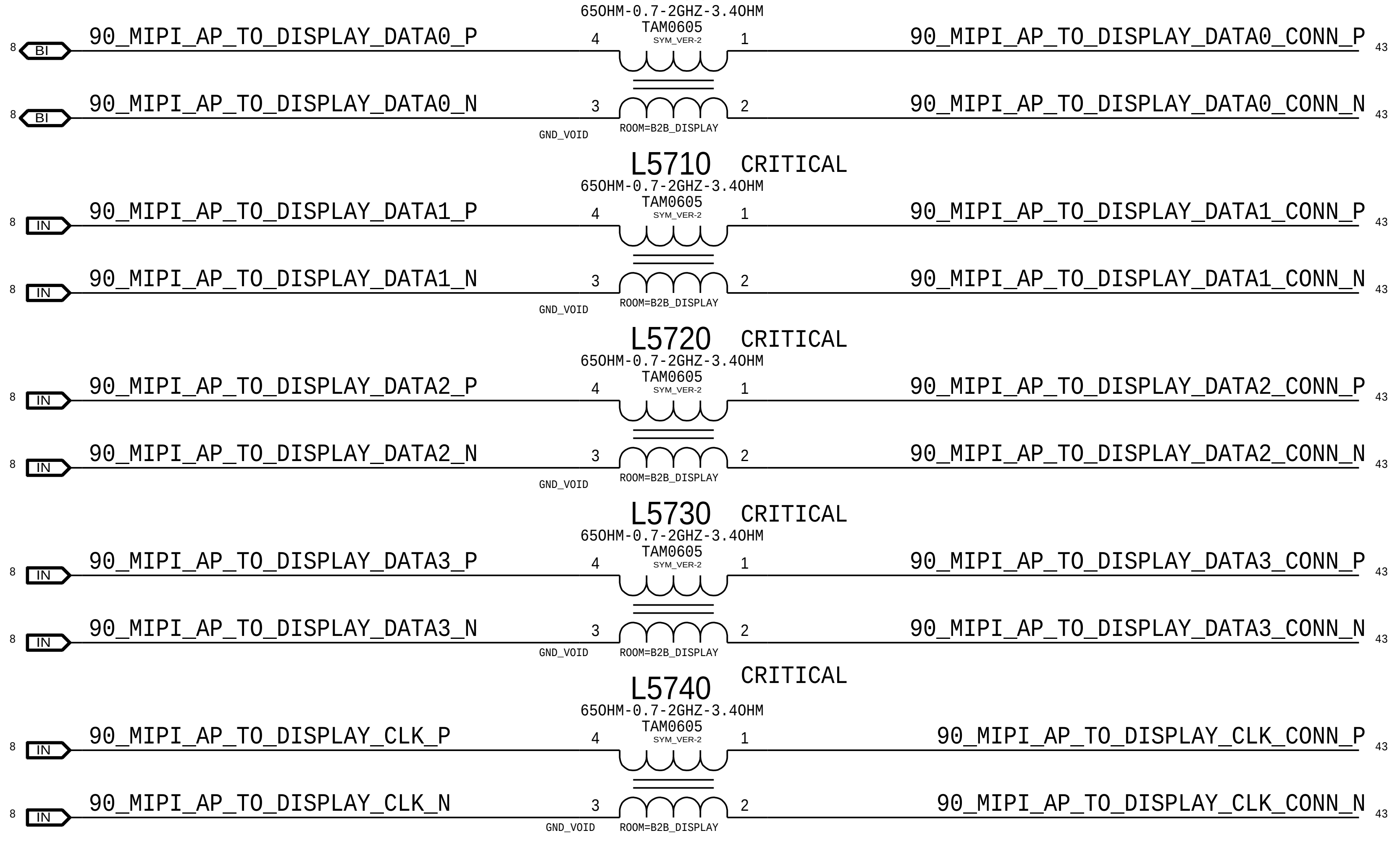
L5700 CRITICAL
65OHM-0.7-2GHZ-3.4OHM
TAM0605
SYM_VER-2
8 BI 90_MIPI_AP_TO_DISPLAY_DATA0_P
90_MIPI_AP_TO_DISPLAY_DATA0_CONN_P 43
8 BI 90_MIPI_AP_TO_DISPLAY_DATA0_N
90_MIPI_AP_TO_DISPLAY_DATA0_CONN_N 43
GND_VOID
ROOM=B2B_DISPLAY
L5710 CRITICAL
8 IN 90_MIPI_AP_TO_DISPLAY_DATA1_P
90_MIPI_AP_TO_DISPLAY_DATA1_CONN_P 43
8 IN 90_MIPI_AP_TO_DISPLAY_DATA1_N
90_MIPI_AP_TO_DISPLAY_DATA1_CONN_N 43
L5720 CRITICAL
8 IN 90_MIPI_AP_TO_DISPLAY_DATA2_P
90_MIPI_AP_TO_DISPLAY_DATA2_CONN_P 43
8 IN 90_MIPI_AP_TO_DISPLAY_DATA2_N
90_MIPI_AP_TO_DISPLAY_DATA2_CONN_N 43
L5730 CRITICAL
8 IN 90_MIPI_AP_TO_DISPLAY_DATA3_P
90_MIPI_AP_TO_DISPLAY_DATA3_CONN_P 43
8 IN 90_MIPI_AP_TO_DISPLAY_DATA3_N
90_MIPI_AP_TO_DISPLAY_DATA3_CONN_N 43
L5740 CRITICAL
8 IN 90_MIPI_AP_TO_DISPLAY_CLK_P
90_MIPI_AP_TO_DISPLAY_CLK_CONN_P 43
8 IN 90_MIPI_AP_TO_DISPLAY_CLK_N
90_MIPI_AP_TO_DISPLAY_CLK_CONN_N 43

Display Power

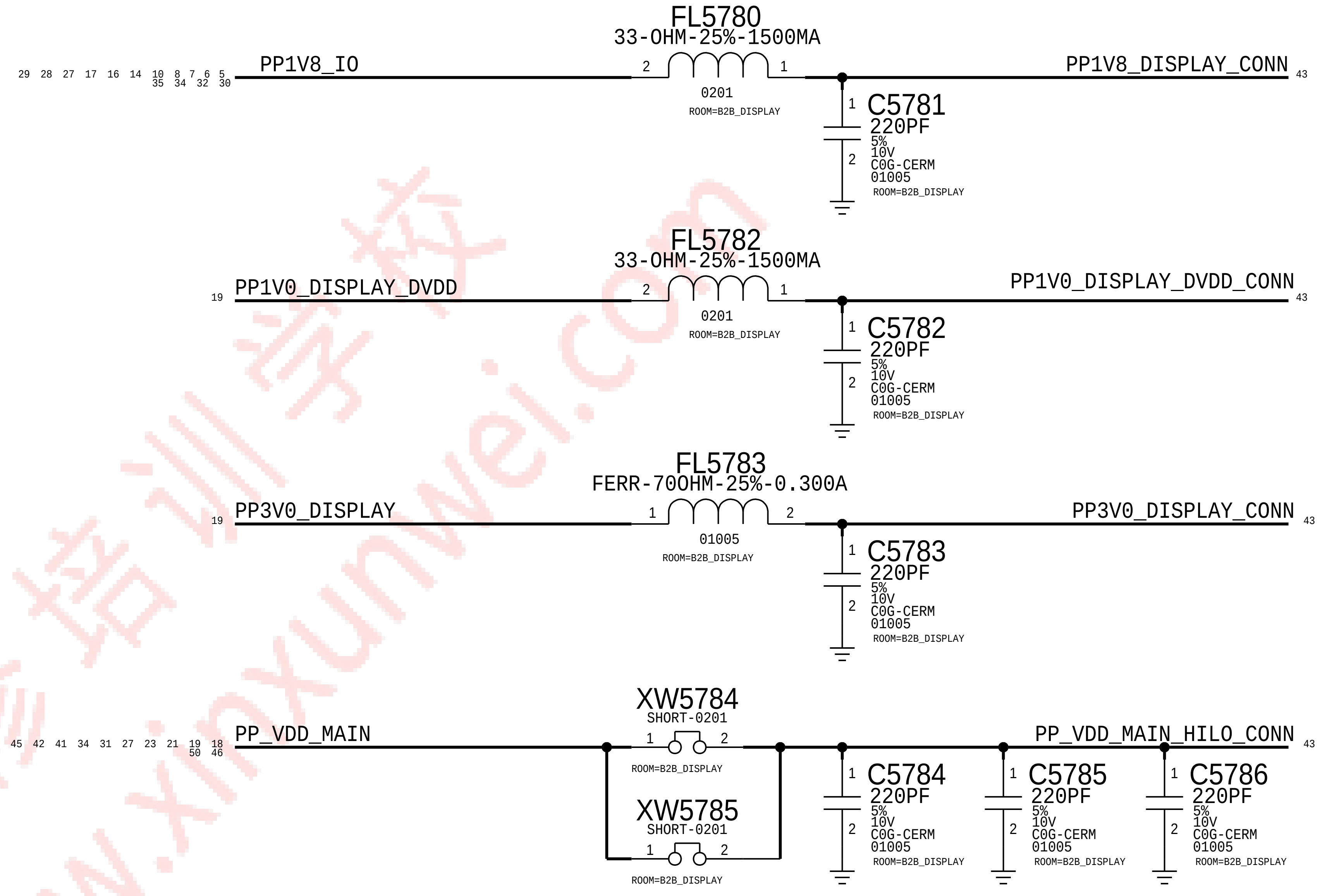
FL5780
33-OHM-25%-1500MA
0201
ROOM=B2B_DISPLAY
29 28 27 17 16 14 10 8 7 6 5 35 34 32 30 PP1V8_IO
PP1V8_DISPLAY_CONN 43
C5781
220PF
5%
10V
C0G-CERM
01005
FL5782
33-OHM-25%-1500MA
0201
19 PP1V0_DISPLAY_DVDD
PP1V0_DISPLAY_DVDD_CONN 43
C5782
220PF
FL5783
FERR-70OHM-25%-0.300A
01005
19 PP3V0_DISPLAY
PP3V0_DISPLAY_CONN 43
C5783
220PF
XW5784
SHORT-0201
XW5785
SHORT-0201
45 42 41 34 31 27 23 21 19 18 50 46 PP_VDD_MAIN
PP_VDD_MAIN_HILO_CONN 43
C5784
220PF
C5785
220PF
C5786
220PF
5%
10V
C0G-CERM
01005
ROOM=B2B_DISPLAY

SYNC_MASTER=test_mlb SYNC_DATE=10/13/2016

PAGE TITLE
CG: B2B Display

Apple Inc.

DRAWING NUMBER	SIZE
051-02221	D
REVISION 9.0.0	
BRANCH evt-1	
PAGE 57 OF 80	
SHEET 43 OF 51	

NOTICE OF PROPRIETARY PROPERTY:

THE INFORMATION CONTAINED HEREIN IS THE PROPRIETARY PROPERTY OF APPLE INC. THE POSESSOR AGREES TO THE FOLLOWING:

I TO MAINTAIN THIS DOCUMENT IN CONFIDENCE
II NOT TO REPRODUCE OR COPY IT
III NOT TO REVEAL OR PUBLISH IT IN WHOLE OR PART
IV ALL RIGHTS RESERVED

Orb + Touch Connector on MLB Bottom

SYNC_DATE=08/25/2015

PAGE TITLE
CG: B2B Orb & Touch

Apple Inc.

NOTICE OF PROPRIETARY PROPERTY:

THE INFORMATION CONTAINED HEREIN IS THE PROPRIETARY PROPERTY OF APPLE INC.
THE POSESSOR AGREES TO THE FOLLOWING:
I TO MAINTAIN THIS DOCUMENT IN CONFIDENCE
II NOT TO REPRODUCE OR COPY IT
III NOT TO REVEAL OR PUBLISH IT IN WHOLE OR PART
IV ALL RIGHTS RESERVED

DRAWING NUMBER: 051-02221
SIZE: D
REVISION: 9.0.0
BRANCH: evt-1
PAGE: 58 OF 80
SHEET: 44 OF 51

CHINAFIX
迅维职业技能培训中心
400-800-9990

VDD_MAIN OV CUT-OFF CIRCUIT

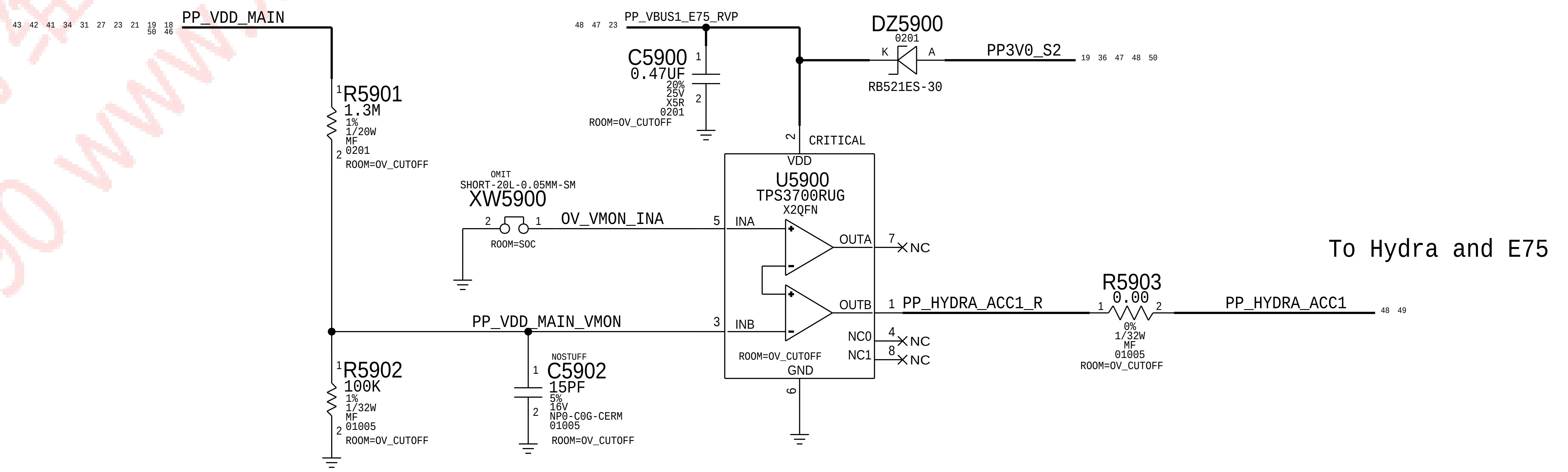
43 42 41 34 31 27 23 21 19 18 50 46
PP_VDD_MAIN
R5901
1.3M
1%
1/20W
MF
0201
ROOM=OV_CUTOFF
48 47 23
PP_VBUS1_E75_RVP
C5900
0.47UF
20%
25V
X5R
0201
ROOM=OV_CUTOFF
DZ5900
0201
K
A
RB521ES-30
PP3V0_S2
19 36 47 48 50
CRITICAL
VDD
U5900
TPS3700RUG
X2QFN
OMIT
SHORT-20L-0.05MM-SM
XW5900
ROOM=SOC
OV_VMON_INA
INA
OUTA
NC
OUTB
PP_HYDRA_ACC1_R
INB
NC0
NC1
NC
NC
ROOM=OV_CUTOFF
GND
PP_VDD_MAIN_VMON
R5902
100K
1%
1/32W
MF
01005
ROOM=OV_CUTOFF
NOSTUFF
C5902
15PF
5%
16V
NP0-C0G-CERM
01005
ROOM=OV_CUTOFF
R5903
0.00
0%
1/32W
MF
01005
ROOM=OV_CUTOFF
PP_HYDRA_ACC1
48 49
To Hydra and E75

PAGE TITLE
I/O: Overvoltage Cut-Off Circuit

Apple Inc.

DRAWING NUMBER	SIZE
051-02221	D

REVISION [illegible]

BRANCH
evt-1

PAGE
59 OF 80

SHEET
45 OF 51

NOTICE OF PROPRIETARY PROPERTY:

THE INFORMATION CONTAINED HEREIN IS THE PROPRIETARY PROPERTY OF APPLE INC.
THE POSESSOR AGREES TO THE FOLLOWING:
I TO MAINTAIN THIS DOCUMENT IN CONFIDENCE
II NOT TO REPRODUCE OR COPY IT
III NOT TO REVEAL OR PUBLISH IT IN WHOLE OR PART
IV ALL RIGHTS RESERVED

迅维职业技能培训中心
400-800-9990

ACCESSORY BUCK

I2C ADDRESS: 0x52

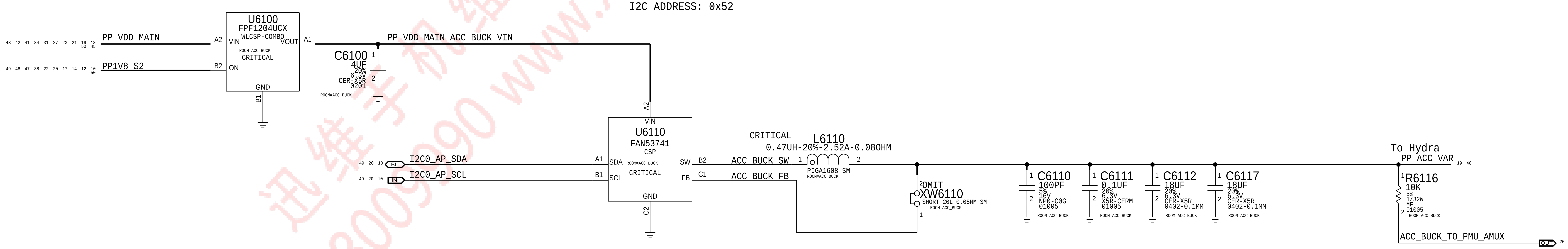
43 42 41 34 31 27 23 21 19 18 50 45
PP_VDD_MAIN
49 48 47 38 22 20 17 14 12 10 50
PP1V8_S2
U6100
FPF1204UCX
WLCSP-COMBO
A2
VIN
B2
ON
VOUT
A1
ROOM=ACC_BUCK
CRITICAL
GND
B1
PP_VDD_MAIN_ACC_BUCK_VIN
C6100
4UF
20%
6.3V
CER-X5R
0201
1
2
ROOM=ACC_BUCK
A2
VIN
U6110
FAN53741
CSP
49 20 10
BI
I2C0_AP_SDA
49 20 10
IN
I2C0_AP_SCL
A1
SDA
B1
SCL
ROOM=ACC_BUCK
CRITICAL
SW
B2
FB
C1
GND
C2
CRITICAL
L6110
0.47UH-20%-2.52A-0.08OHM
ACC_BUCK_SW
1
2
PIGA1608-SM
ROOM=ACC_BUCK
ACC_BUCK_FB
2
OMIT
XW6110
SHORT-20L-0.05MM-SM
ROOM=ACC_BUCK
1
C6110
100PF
5%
16V
NP0-C0G
01005
ROOM=ACC_BUCK
C6111
0.1UF
20%
6.3V
X5R-CERM
01005
ROOM=ACC_BUCK
C6112
18UF
20%
6.3V
CER-X5R
0402-0.1MM
ROOM=ACC_BUCK
C6117
18UF
20%
6.3V
CER-X5R
0402-0.1MM
ROOM=ACC_BUCK
To Hydra
PP_ACC_VAR
19 48
R6116
10K
5%
1/32W
MF
01005
ROOM=ACC_BUCK
1
2
ACC_BUCK_TO_PMU_AMUX
OUT
20

SYNC_MASTER=test_mlb SYNC_DATE=10/17/2016

PAGE TITLE
I/O: Accessory Buck

DRAWING NUMBER 051-02221
SIZE D

Apple Inc.

REVISION 9.0.0

BRANCH evt-1

PAGE 61 OF 80

SHEET 46 OF 51

NOTICE OF PROPRIETARY PROPERTY:

THE INFORMATION CONTAINED HEREIN IS THE PROPRIETARY PROPERTY OF APPLE INC.
THE POSESSOR AGREES TO THE FOLLOWING:
I TO MAINTAIN THIS DOCUMENT IN CONFIDENCE
II NOT TO REPRODUCE OR COPY IT
III NOT TO REVEAL OR PUBLISH IT IN WHOLE OR PART
IV ALL RIGHTS RESERVED

USB-PD

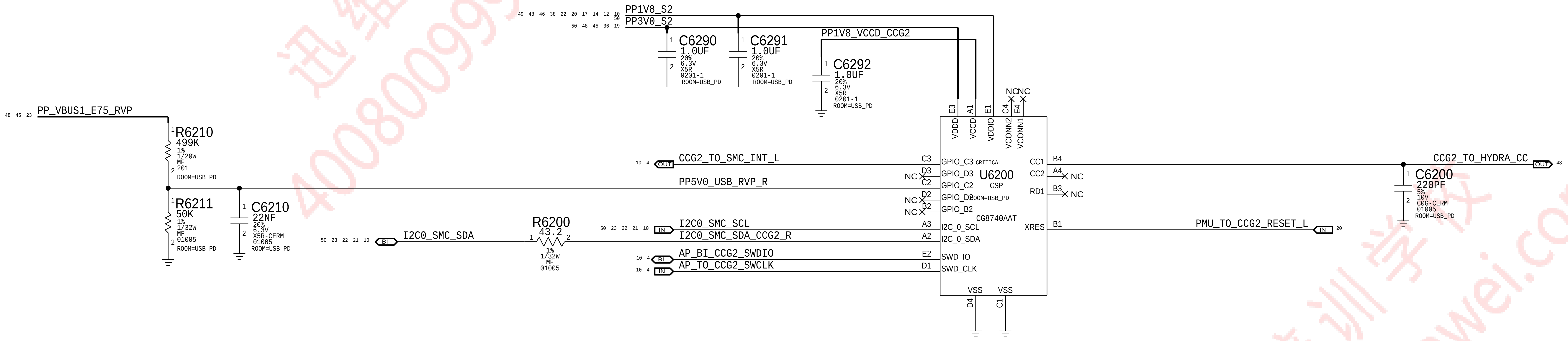
49 48 46 38 22 20 17 14 12 10 50
PP1V8_S2
50 48 45 36 19
PP3V0_S2
C6290
1.0UF
20%
6.3V
X5R
0201-1
ROOM=USB_PD
C6291
1.0UF
20%
6.3V
X5R
0201-1
ROOM=USB_PD
PP1V8_VCCD_CCG2
C6292
1.0UF
20%
6.3V
X5R
0201-1
ROOM=USB_PD
48 45 23
PP_VBUS1_E75_RVP
R6210
499K
1%
1/20W
MF
201
ROOM=USB_PD
R6211
50K
1%
1/32W
MF
01005
ROOM=USB_PD
C6210
22NF
20%
6.3V
X5R-CERM
01005
ROOM=USB_PD
50 23 22 21 10
BI
I2C0_SMC_SDA
R6200
43.2
1%
1/32W
MF
01005
10 4
OUT
CCG2_TO_SMC_INT_L
PP5V0_USB_RVP_R
50 23 22 21 10
IN
I2C0_SMC_SCL
I2C0_SMC_SDA_CCG2_R
10 4
BI
AP_BI_CCG2_SWDIO
10 4
IN
AP_TO_CCG2_SWCLK
NC
NC
NC
NC
NC
E3 A1 E1 C4 E4
VDDD VCCD VDDIO VCONN2 VCONN1
C3 GPIO_C3
D3 GPIO_D3
C2 GPIO_C2
D2 GPIO_D2
B2 GPIO_B2
A3 I2C_0_SCL
A2 I2C_0_SDA
E2 SWD_IO
D1 SWD_CLK
CRITICAL
U6200
CSP
ROOM=USB_PD
CG8740AAT
CC1 B4
CC2 A4
RD1 B3
XRES B1
NC
NC
VSS VSS
D4 C1
CCG2_TO_HYDRA_CC
OUT
48
C6200
220PF
5%
10V
C0G-CERM
01005
ROOM=USB_PD
PMU_TO_CCG2_RESET_L
IN
20

SYNC_MASTER=test_mlb

SYNC_DATE=10/13/2016

PAGE TITLE

I/O: USB PD

DRAWING NUMBER 051-02221

SIZE D

Apple Inc.

REVISION

BRANCH evt-1

PAGE 62 OF 80

SHEET 47 OF 51

NOTICE OF PROPRIETARY PROPERTY:

THE INFORMATION CONTAINED HEREIN IS THE PROPRIETARY PROPERTY OF APPLE INC.
THE POSESSOR AGREES TO THE FOLLOWING:

I TO MAINTAIN THIS DOCUMENT IN CONFIDENCE
II NOT TO REPRODUCE OR COPY IT
III NOT TO REVEAL OR PUBLISH IT IN WHOLE OR PART
IV ALL RIGHTS RESERVED

Hydra

I2C Address: 0011010X

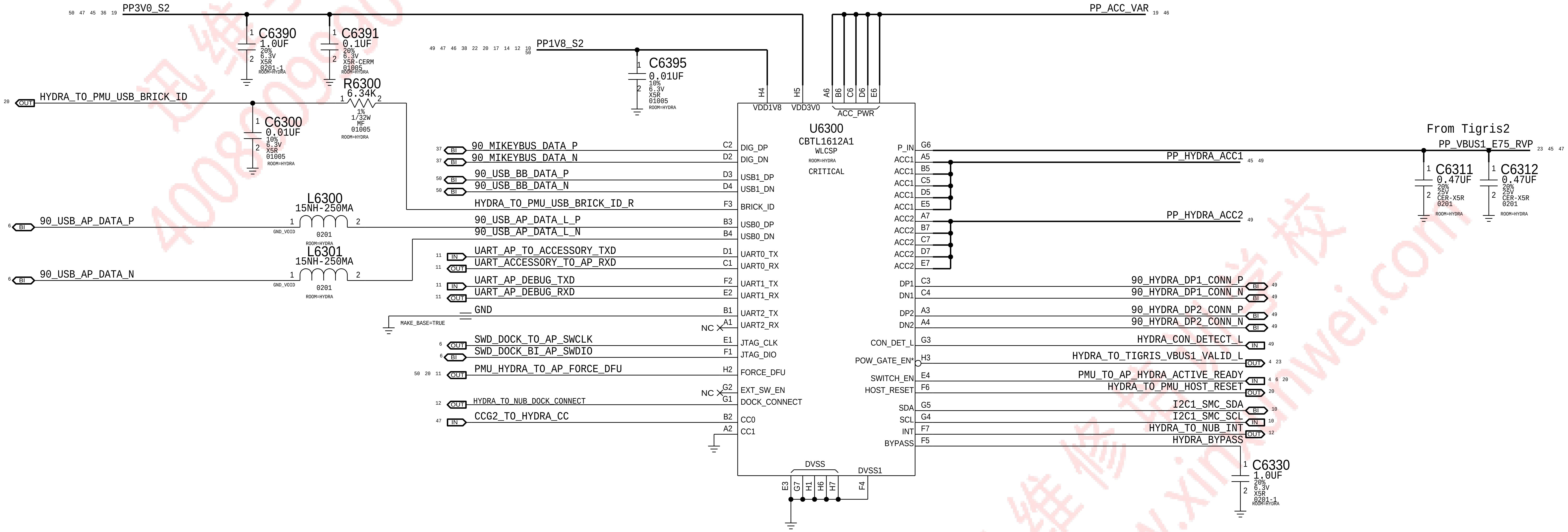

PP3V0_S2
C6390
1.0UF
20%
6.3V
X5R
0201-1
C6391
0.1UF
20%
6.3V
X5R-CERM
01005
PP1V8_S2
C6395
0.01UF
10%
6.3V
X5R
01005
PP_ACC_VAR
HYDRA_TO_PMU_USB_BRICK_ID
R6300
6.34K
1%
1/32W
MF
01005
C6300
0.01UF
10%
6.3V
X5R
01005
90_MIKEYBUS_DATA_P
90_MIKEYBUS_DATA_N
90_USB_BB_DATA_P
90_USB_BB_DATA_N
HYDRA_TO_PMU_USB_BRICK_ID_R
L6300
15NH-250MA
0201
90_USB_AP_DATA_P
90_USB_AP_DATA_L_P
90_USB_AP_DATA_L_N
L6301
15NH-250MA
0201
90_USB_AP_DATA_N
UART_AP_TO_ACCESSORY_TXD
UART_ACCESSORY_TO_AP_RXD
UART_AP_DEBUG_TXD
UART_AP_DEBUG_RXD
GND
MAKE_BASE=TRUE
SWD_DOCK_TO_AP_SWCLK
SWD_DOCK_BI_AP_SWDIO
PMU_HYDRA_TO_AP_FORCE_DFU
HYDRA_TO_NUB_DOCK_CONNECT
CCG2_TO_HYDRA_CC
NC
U6300
CBTL1612A1
WLCSP
CRITICAL
VDD1V8
VDD3V0
ACC_PWR
DIG_DP
DIG_DN
USB1_DP
USB1_DN
BRICK_ID
USB0_DP
USB0_DN
UART0_TX
UART0_RX
UART1_TX
UART1_RX
UART2_TX
UART2_RX
JTAG_CLK
JTAG_DIO
FORCE_DFU
EXT_SW_EN
DOCK_CONNECT
CC0
CC1
DVSS
DVSS1
P_IN
ACC1
ACC2
DP1
DN1
DP2
DN2
CON_DET_L
POW_GATE_EN*
SWITCH_EN
HOST_RESET
SDA
SCL
INT
BYPASS
From Tigris2
PP_VBUS1_E75_RVP
PP_HYDRA_ACC1
PP_HYDRA_ACC2
C6311
0.47UF
20%
25V
CER-X5R
0201
C6312
0.47UF
20%
25V
CER-X5R
0201
90_HYDRA_DP1_CONN_P
90_HYDRA_DP1_CONN_N
90_HYDRA_DP2_CONN_P
90_HYDRA_DP2_CONN_N
HYDRA_CON_DETECT_L
HYDRA_TO_TIGRIS_VBUS1_VALID_L
PMU_TO_AP_HYDRA_ACTIVE_READY
HYDRA_TO_PMU_HOST_RESET
I2C1_SMC_SDA
I2C1_SMC_SCL
HYDRA_TO_NUB_INT
HYDRA_BYPASS
C6330
1.0UF
20%
6.3V
X5R
0201-1

SYNC_MASTER=test_mlb

SYNC_DATE=10/13/2016

PAGE TITLE

I/O: Hydra

Apple Inc.

DRAWING NUMBER 051-02221

SIZE D

REVISION 9.0.0

BRANCH evt-1

PAGE 63 OF 80

SHEET 48 OF 51

NOTICE OF PROPRIETARY PROPERTY:

THE INFORMATION CONTAINED HEREIN IS THE PROPRIETARY PROPERTY OF APPLE INC.
THE POSESSOR AGREES TO THE FOLLOWING:
I TO MAINTAIN THIS DOCUMENT IN CONFIDENCE
II NOT TO REPRODUCE OR COPY IT
III NOT TO REVEAL OR PUBLISH IT IN WHOLE OR PART
IV ALL RIGHTS RESERVED

ARC
FL6400 150OHM-25%-200MA-0.7DCR
PP1V8_S2
PP1V8_SAKONNET_CONN
C6400 220PF
R6416 0.00
I2C0_AP_SCL
I2C0_AP_TO_SAKONNET_SCL_CONN
C6416 56PF
R6418 0.00
I2C0_AP_SDA
I2C0_AP_BI_SAKONNET_SDA_CONN
C6418 56PF
R6419 49.9
I2S_CODEC_ASP1_TO_AOP_AMPS_BCLK
I2S_CODEC_ASP1_TO_AOP_AMPS_BCLK_CONN
C6419 68PF
R6420 49.9
I2S_CODEC_ASP1_TO_AOP_AMPS_LRCLK
I2S_CODEC_ASP1_TO_AOP_AMPS_LRCLK_CONN
C6420 68PF
R6421 49.9
I2S_AOP_AMPS_TO_CODEC_ASP1_DOUT
I2S_AOP_AMPS_TO_CODEC_ASP1_DOUT_CONN
C6421 68PF
ARC1_TO_SOLENOID1_OUT_POS
ARC1_TO_SOLENOID1_OUT_NEG
C6472 820PF
C6471 220PF
C6470 220PF
C6473 820PF
DOCK FLEX CONNECTOR
Rcpt: 516S00038 <-- This one on MLB
Plug: 516S00037
J6400 BM28P0.6-44DS-0.35V F-ST-SM
SPKRAMP_BOT_TO_COIL_OUT_NEG
SPKRAMP_BOT_TO_COIL_OUT_POS
COIL_TO_SPKRAMP_BOT_VSENSE_POS_CONN
COIL_TO_SPKRAMP_BOT_VSENSE_NEG_CONN
PP_CODEC_TO_LOWERMIC4_BIAS_CONN
LOWERMIC4_TO_CODEC_BIAS_FILT_RET
LOWERMIC4_TO_CODEC_AIN4_CONN_N
LOWERMIC4_TO_CODEC_AIN4_CONN_P
PP1V8_IMU_COMPASS_DOCK_CONN
I2C1_AOP_BI_COMPASS_SDA_DOCK_CONN
I2C1_AOP_TO_COMPASS_SCL_DOCK_CONN
COMPASS_TO_AOP_INT_DOCK_CONN
LOWERMIC1_TO_CODEC_AIN1_CONN_P
LOWERMIC1_TO_CODEC_AIN1_CONN_N
LOWERMIC1_TO_CODEC_BIAS_FILT_RET
PP_CODEC_TO_LOWERMIC1_BIAS_CONN
I2C1_AP_BI_MIC1_SDA_CONN
I2C1_AP_TO_MIC1_SCL_CONN
SOLENOID1_TO_ARC1_VSENSE_NEG
SOLENOID1_TO_ARC1_VSENSE_POS
90_HYDRA_DP1_CONN_P
90_HYDRA_DP1_CONN_N
90_HYDRA_DP2_CONN_N
90_HYDRA_DP2_CONN_P
PP_HYDRA_ACC1_CONN
MIKEYBUS_REFERENCE
HYDRA_CON_DETECT_CONN_L
PP1V8_SAKONNET_CONN
I2S_CODEC_ASP1_TO_AOP_AMPS_LRCLK_CONN
I2C0_AP_BI_SAKONNET_SDA_CONN
I2C0_AP_TO_SAKONNET_SCL_CONN
I2S_CODEC_ASP1_TO_AOP_AMPS_BCLK_CONN
I2S_AOP_AMPS_TO_CODEC_ASP1_DOUT_CONN
PP_HYDRA_ACC2_CONN
ARC1_TO_SOLENOID1_OUT_NEG
ARC1_TO_SOLENOID1_OUT_POS
PP_VBUS1_E75
C6490 0.1UF
C6491 0.1UF
C6492 0.1UF
C6493 220PF
C6494 220PF
C6495 0.1UF
C6496 0.1UF
C6497 0.1UF
Compass (Dock Flex Location)
FL6430 150OHM-25%-200MA-0.7DCR
PP1V8_IMU_S2
PP1V8_IMU_COMPASS_DOCK_CONN
C6430 220PF
R6431 0.00
I2C1_AOP_SCL
I2C1_AOP_TO_COMPASS_SCL_DOCK_CONN
C6431 56PF
R6432 0.00
I2C1_AOP_SDA
I2C1_AOP_BI_COMPASS_SDA_DOCK_CONN
C6432 56PF
FL6433 150OHM-25%-200MA-0.7DCR
COMPASS_TO_AOP_INT
COMPASS_TO_AOP_INT_DOCK_CONN
C6433 220PF
Hydra
R6410 100
HYDRA_CON_DETECT_L
HYDRA_CON_DETECT_CONN_L
C6410 27PF
FL6411 10-OHM-1.1A
PP_HYDRA_ACC1
PP_HYDRA_ACC1_CONN
C6411 220PF
FL6413 22-OHM-25%-1800MA
PP_HYDRA_ACC2
PP_HYDRA_ACC2_CONN
C6413 220PF
SOUTH SPEAKER
FL6480 150OHM-25%-200MA-0.7DCR
COIL_TO_SPKRAMP_BOT_VSENSE_POS
COIL_TO_SPKRAMP_BOT_VSENSE_POS_CONN
C6480 220PF
FL6482 150OHM-25%-200MA-0.7DCR
COIL_TO_SPKRAMP_BOT_VSENSE_NEG
COIL_TO_SPKRAMP_BOT_VSENSE_NEG_CONN
C6482 220PF
SPKRAMP_BOT_TO_COIL_OUT_POS
C6484 820PF
C6483 220PF
SPKRAMP_BOT_TO_COIL_OUT_NEG
C6486 820PF
C6485 220PF
LOWER MIC1 + LOWER MIC4
FL6450 150OHM-25%-200MA-0.7DCR
LOWERMIC1_TO_CODEC_AIN1_P
LOWERMIC1_TO_CODEC_AIN1_CONN_P
C6450 56PF
FL6452 150OHM-25%-200MA-0.7DCR
LOWERMIC1_TO_CODEC_AIN1_N
LOWERMIC1_TO_CODEC_AIN1_CONN_N
C6452 56PF
FL6454 150OHM-25%-200MA-0.7DCR
PP_CODEC_TO_LOWERMIC1_BIAS
PP_CODEC_TO_LOWERMIC1_BIAS_CONN
C6454 220PF
FL6460 150OHM-25%-200MA-0.7DCR
LOWERMIC4_TO_CODEC_AIN4_P
LOWERMIC4_TO_CODEC_AIN4_CONN_P
C6460 56PF
FL6462 150OHM-25%-200MA-0.7DCR
LOWERMIC4_TO_CODEC_AIN4_N
LOWERMIC4_TO_CODEC_AIN4_CONN_N
C6462 56PF
FL6464 150OHM-25%-200MA-0.7DCR
PP_CODEC_TO_LOWERMIC4_BIAS
PP_CODEC_TO_LOWERMIC4_BIAS_CONN
C6464 220PF
R6465 0.00
I2C1_AP_SCL
I2C1_AP_TO_MIC1_SCL_CONN
C6465 56PF
R6466 0.00
I2C1_AP_SDA
I2C1_AP_BI_MIC1_SDA_CONN
C6466 56PF

SYNC_MASTER=test_mlb
SYNC_DATE=10/13/2016

PAGE TITLE
I/O: B2B Dock

Apple Inc.

DRAWING NUMBER 051-02221
SIZE D

NOTICE OF PROPRIETARY PROPERTY:

THE INFORMATION CONTAINED HEREIN IS THE PROPRIETARY PROPERTY OF APPLE INC. THE POSESSOR AGREES TO THE FOLLOWING:

I TO MAINTAIN THIS DOCUMENT IN CONFIDENCE
II NOT TO REPRODUCE OR COPY IT
III NOT TO REVEAL OR PUBLISH IT IN WHOLE OR PART
IV ALL RIGHTS RESERVED

BRANCH evt-1

PAGE 64 OF 80

SHEET 49 OF 51

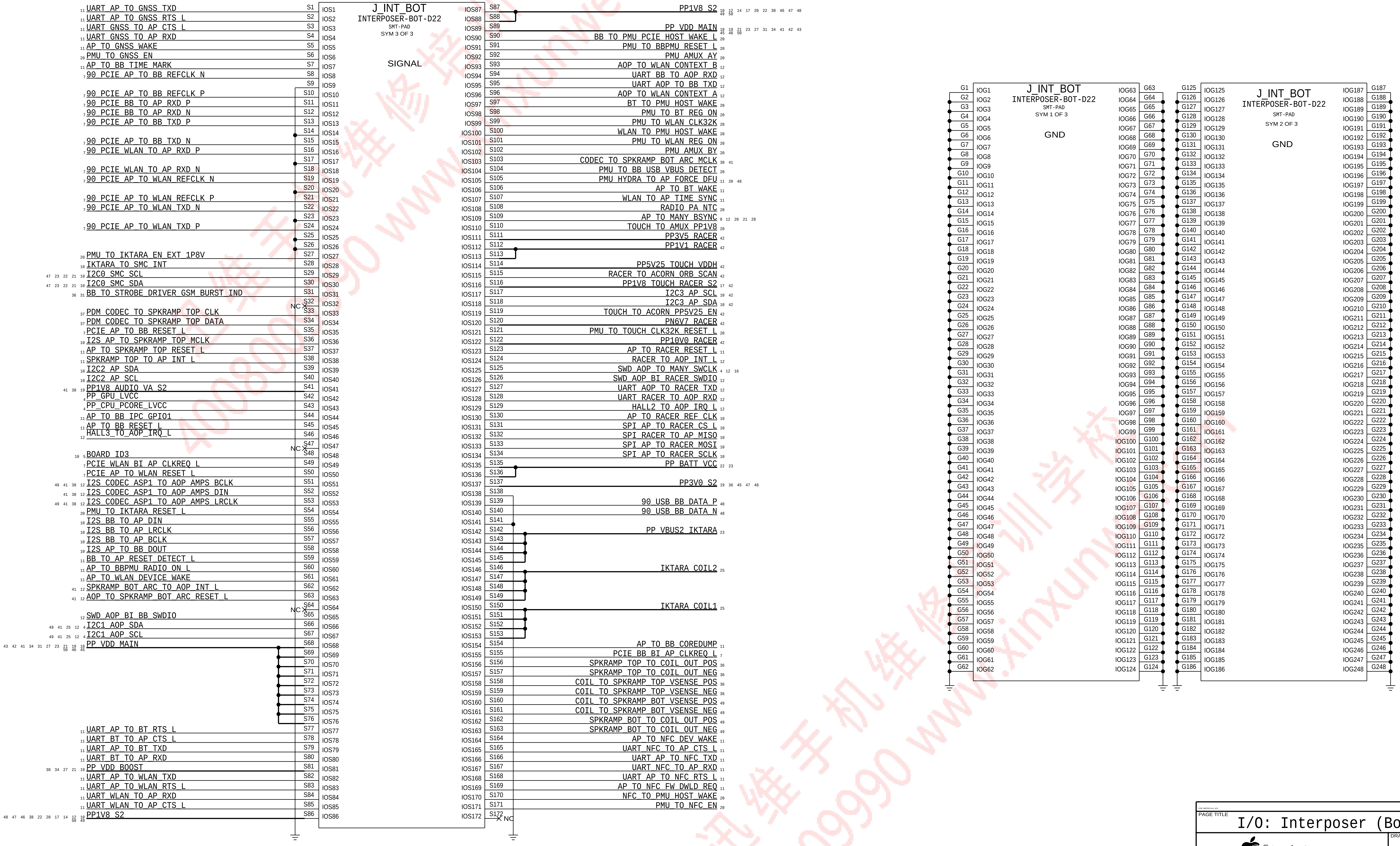
J_INT_BOT
INTERPOSER-BOT-D22
SMT-PAD
SYM 3 OF 3
SIGNAL
UART_AP_TO_GNSS_TXD
UART_AP_TO_GNSS_RTS_L
UART_GNSS_TO_AP_CTS_L
UART_GNSS_TO_AP_RXD
AP_TO_GNSS_WAKE
PMU_TO_GNSS_EN
AP_TO_BB_TIME_MARK
90_PCIE_AP_TO_BB_REFCLK_N
90_PCIE_AP_TO_BB_REFCLK_P
90_PCIE_BB_TO_AP_RXD_P
90_PCIE_BB_TO_AP_RXD_N
90_PCIE_AP_TO_BB_TXD_P
90_PCIE_AP_TO_BB_TXD_N
90_PCIE_WLAN_TO_AP_RXD_P
90_PCIE_WLAN_TO_AP_RXD_N
90_PCIE_AP_TO_WLAN_REFCLK_N
90_PCIE_AP_TO_WLAN_REFCLK_P
90_PCIE_AP_TO_WLAN_TXD_N
90_PCIE_AP_TO_WLAN_TXD_P
PMU_TO_IKTARA_EN_EXT_1P8V
IKTARA_TO_SMC_INT
I2C0_SMC_SCL
I2C0_SMC_SDA
BB_TO_STROBE_DRIVER_GSM_BURST_IND
NC
PDM_CODEC_TO_SPKRAMP_TOP_CLK
PDM_CODEC_TO_SPKRAMP_TOP_DATA
PCIE_AP_TO_BB_RESET_L
I2S_AP_TO_SPKRAMP_TOP_MCLK
AP_TO_SPKRAMP_TOP_RESET_L
SPKRAMP_TOP_TO_AP_INT_L
I2C2_AP_SDA
I2C2_AP_SCL
PP1V8_AUDIO_VA_S2
PP_GPU_LVCC
PP_CPU_PCORE_LVCC
AP_TO_BB_IPC_GPIO1
AP_TO_BB_RESET_L
HALL3_TO_AOP_IRQ_L
NC
BOARD_ID3
PCIE_WLAN_BI_AP_CLKREQ_L
PCIE_AP_TO_WLAN_RESET_L
I2S_CODEC_ASP1_TO_AOP_AMPS_BCLK
I2S_CODEC_ASP1_TO_AOP_AMPS_DIN
I2S_CODEC_ASP1_TO_AOP_AMPS_LRCLK
PMU_TO_IKTARA_RESET_L
I2S_BB_TO_AP_DIN
I2S_BB_TO_AP_LRCLK
I2S_BB_TO_AP_BCLK
I2S_AP_TO_BB_DOUT
BB_TO_AP_RESET_DETECT_L
AP_TO_BBPMU_RADIO_ON_L
AP_TO_WLAN_DEVICE_WAKE
SPKRAMP_BOT_ARC_TO_AOP_INT_L
AOP_TO_SPKRAMP_BOT_ARC_RESET_L
NC
SWD_AOP_BI_BB_SWDIO
I2C1_AOP_SDA
I2C1_AOP_SCL
PP_VDD_MAIN
UART_AP_TO_BT_RTS_L
UART_BT_TO_AP_CTS_L
UART_AP_TO_BT_TXD
UART_BT_TO_AP_RXD
PP_VDD_BOOST
UART_AP_TO_WLAN_TXD
UART_AP_TO_WLAN_RTS_L
UART_WLAN_TO_AP_RXD
UART_WLAN_TO_AP_CTS_L
PP1V8_S2
PP1V8_S2
PP_VDD_MAIN
BB_TO_PMU_PCIE_HOST_WAKE_L
PMU_TO_BBPMU_RESET_L
PMU_AMUX_AY
AOP_TO_WLAN_CONTEXT_B
UART_BB_TO_AOP_RXD
UART_AOP_TO_BB_TXD
AOP_TO_WLAN_CONTEXT_A
BT_TO_PMU_HOST_WAKE
PMU_TO_BT_REG_ON
PMU_TO_WLAN_CLK32K
WLAN_TO_PMU_HOST_WAKE
PMU_TO_WLAN_REG_ON
PMU_AMUX_BY
CODEC_TO_SPKRAMP_BOT_ARC_MCLK
PMU_TO_BB_USB_VBUS_DETECT
PMU_HYDRA_TO_AP_FORCE_DFU
AP_TO_BT_WAKE
WLAN_TO_AP_TIME_SYNC
RADIO_PA_NTC
AP_TO_MANY_BSYNC
TOUCH_TO_AMUX_PP1V8
PP3V5_RACER
PP1V1_RACER
PP5V25_TOUCH_VDDH
RACER_TO_ACORN_ORB_SCAN
PP1V8_TOUCH_RACER_S2
I2C3_AP_SCL
I2C3_AP_SDA
TOUCH_TO_ACORN_PP5V25_EN
PN6V7_RACER
PMU_TO_TOUCH_CLK32K_RESET_L
PP10V0_RACER
AP_TO_RACER_RESET_L
RACER_TO_AOP_INT_L
SWD_AOP_TO_MANY_SWCLK
SWD_AOP_BI_RACER_SWDIO
UART_AOP_TO_RACER_TXD
UART_RACER_TO_AOP_RXD
HALL2_TO_AOP_IRQ_L
AP_TO_RACER_REF_CLK
SPI_AP_TO_RACER_CS_L
SPI_RACER_TO_AP_MISO
SPI_AP_TO_RACER_MOSI
SPI_AP_TO_RACER_SCLK
PP_BATT_VCC
PP3V0_S2
90_USB_BB_DATA_P
90_USB_BB_DATA_N
PP_VBUS2_IKTARA
IKTARA_COIL2
IKTARA_COIL1
AP_TO_BB_COREDUMP
PCIE_BB_BI_AP_CLKREQ_L
SPKRAMP_TOP_TO_COIL_OUT_POS
SPKRAMP_TOP_TO_COIL_OUT_NEG
COIL_TO_SPKRAMP_TOP_VSENSE_POS
COIL_TO_SPKRAMP_TOP_VSENSE_NEG
COIL_TO_SPKRAMP_BOT_VSENSE_POS
COIL_TO_SPKRAMP_BOT_VSENSE_NEG
SPKRAMP_BOT_TO_COIL_OUT_POS
SPKRAMP_BOT_TO_COIL_OUT_NEG
AP_TO_NFC_DEV_WAKE
UART_NFC_TO_AP_CTS_L
UART_AP_TO_NFC_TXD
UART_NFC_TO_AP_RXD
UART_AP_TO_NFC_RTS_L
AP_TO_NFC_FW_DWLD_REQ
NFC_TO_PMU_HOST_WAKE
PMU_TO_NFC_EN
NC
J_INT_BOT
INTERPOSER-BOT-D22
SMT-PAD
SYM 1 OF 3
GND
J_INT_BOT
INTERPOSER-BOT-D22
SMT-PAD
SYM 2 OF 3
GND

PAGE TITLE
I/O: Interposer (Bottom)

DRAWING NUMBER 051-02221

SIZE D

Apple Inc.

NOTICE OF PROPRIETARY PROPERTY:

THE INFORMATION CONTAINED HEREIN IS THE PROPRIETARY PROPERTY OF APPLE INC. THE POSESSOR AGREES TO THE FOLLOWING:

I TO MAINTAIN THIS DOCUMENT IN CONFIDENCE

II NOT TO REPRODUCE OR COPY IT

III NOT TO REVEAL OR PUBLISH IT IN WHOLE OR PART

IV ALL RIGHTS RESERVED

BRANCH evt-1

PAGE 65 OF 80

SHEET 50 OF 51

Radios on MLB Bottom

SYNC_DATE=06/04/2015

PAGE TITLE RADIOS		
Apple Inc.	DRAWING NUMBER 051-02221	SIZE D
	REVISION 9.0.0	
NOTICE OF PROPRIETARY PROPERTY: THE INFORMATION CONTAINED HEREIN IS THE PROPRIETARY PROPERTY OF APPLE INC. THE POSESSOR AGREES TO THE FOLLOWING: I TO MAINTAIN THIS DOCUMENT IN CONFIDENCE II NOT TO REPRODUCE OR COPY IT III NOT TO REVEAL OR PUBLISH IT IN WHOLE OR PART IV ALL RIGHTS RESERVED	BRANCH evt-1	
	PAGE 80 OF 80	
	SHEET 51 OF 51	

迅维职业技能培训中心
400-800-9990

1. ALL RESISTANCE VALUES ARE IN OHMS, 0.1 WATT +/- 5%.
2. ALL CAPACITANCE VALUES ARE IN MICROFARADS.
3. ALL CRYSTALS & OSCILLATOR VALUES ARE IN HERTZ.

REV	ECN	DESCRIPTION OF REVISION	CK APPD DATE
7	0008448938	ENGINEERING RELEASED	2017-04-11

X893 MLB Bottom: EVT

LAST_MODIFICATION=Tue Apr 11 16:10:11 2017

PAGE	CSA	CONTENTS	SYNC	DATE
1	1	TABLE OF CONTENTS		07/29/2016
2	2	SYSTEM:BOM Tables		03/08/2017
3	4	SYSTEM: Mechanical Components		12/01/2016
4	6	BOOTSTRAPPING		11/03/2016
5	7	SYSTEM: Testpoints (Bottom)	test_mlb	01/17/2017
6	34	SYSTEM POWER: Iktara	mlb_bot	04/04/2017
7	49	AUDIO: Speaker Amp Bottom	mlb_bot	04/04/2017
8	50	AUDIO: Speaker Amp Top	mlb_bot	04/04/2017
9	55	HALL EFFECT	mlb_bot	04/04/2017
10	58	CG: B2B Luna & Touch	mlb_bot	04/04/2017
11	66	I/O: Interposer (Top)	mlb_bot	04/04/2017
12	80	RADIOS		07/29/2016
13	1	RADIO_MLB		
14	2	BASEBAND		
15	3	BASEBAND MEMORY/DEBUG		
16	4	BASEBAND POWER		
17	5	BASEBAND PMIC		
18	6	TRANSCEIVERS		
19	7	ET MODULATOR		
20	8	TDD TRANSMIT		
21	9	FDD TRANSMIT		
22	10	PRIMARY RECEIVE		
23	11	LOWER ANTENNA & COUPLERS		
24	12	DIVERSITY RECEIVE ASM'S		
25	13	DIVERSITY RECEIVE LNA'S		
26	14	UPPER ANTENNA FEEDS		
27	15	GNSS		
28	16	TEST POINTS & SIM		
29	17	RF CONNECTORS AND MC		
30	1	SymbolPorts		
31	4	Guinness	WIFI	01/30/2014
32	5	WiFiANTFeeds		
33	1	page1		
34	75	NFC		

PAGE	CSA	CONTENTS	SYNC	DATE

Sub Designs

SOURCE PROJECT	SUB-DESIGN NAME	VERSION	HARD/ SOFT	SYNC_DATE/TIME
D221	RADIO_MLB	0.115.0	S	2017_04_05_18:48:43
D22	NFC_MLB	0.22.0	S	2017_03_22_22:11:23
D22	WIFI_MLB	0.20.0	S	2017_04_04_09:54:33

BOM:639-03229
MCO:056-04080

PART#	QTY	DESCRIPTION	REFERENCE DESIGNATOR(S)	CRITICAL	BOM OPTION
051-02247	1	SCH,MLB_BOT,X893	SCH	NO	COMMON
820-00869	1	PCB,MLB_BOT,X893	PCB	NO	COMMON

TABLE OF CONTENTS
SYNC_DATE=07/29/2016

DRAWING TITLE
SCH,MLB,BOT,X893

Apple Inc.

DRAWING NUMBER 051-02247
SIZE D
REVISION 7.0.0
BRANCH evt-1
PAGE 1 OF 80
SHEET 1 OF 34

NOTICE OF PROPRIETARY PROPERTY:

THE INFORMATION CONTAINED HEREIN IS THE PROPRIETARY PROPERTY OF APPLE INC.
THE POSESSOR AGREES TO THE FOLLOWING:
I TO MAINTAIN THIS DOCUMENT IN CONFIDENCE
II NOT TO REPRODUCE OR COPY IT
III NOT TO REVEAL OR PUBLISH IT IN WHOLE OR PART
IV ALL RIGHTS RESERVED

EEEE Codes

PART#	QTY	DESCRIPTION	REFERENCE DESIGNATOR(S)	CRITICAL	BOM OPTION
825-7691	1	EEEE FOR (MLB_BOT, 639-03229)	EEEE_HM07	NO	COMMON

Global Capacitors

PART NUMBER	ALTERNATE FOR PART NUMBER	BOM OPTION	REF DES	COMMENTS:
138S00148	138S00149	BOM_TABLE_ALTS	ALL	0402-3T,10.5uF@1V, Kyocera
138S00150	138S00149	BOM_TABLE_ALTS	ALL	0402-3T,10.5uF@1V, SEMCO
138S00151	138S00149	BOM_TABLE_ALTS	ALL	0402-3T,10.5uF@1V, TY

CRITICAL PART#	COMMENT
138S00149	0402-3T,10.5uF@1V

PART NUMBER	ALTERNATE FOR PART NUMBER	BOM OPTION	REF DES	COMMENTS:
138S00143	138S00144	BOM_TABLE_ALTS	ALL	0402,16uF@1V, Kyocera
138S00163	138S00144	BOM_TABLE_ALTS	ALL	0402,16uF@1V, Taiyo

CRITICAL PART#	COMMENT
138S00144	0402,16uF@1V

PART NUMBER	ALTERNATE FOR PART NUMBER	BOM OPTION	REF DES	COMMENTS:
138S00138	138S00139	BOM_TABLE_ALTS	ALL	0201,3uF@1V, Kyocera
138S00164	138S00139	BOM_TABLE_ALTS	ALL	0201,3uF@1V, Taiyo

CRITICAL PART#	COMMENT
138S00139	0201,3uF@1V

PART NUMBER	ALTERNATE FOR PART NUMBER	BOM OPTION	REF DES	COMMENTS:
138S00145	138S00146	BOM_TABLE_ALTS	ALL	0402,5.1uF@3V, Kyocera
138S00165	138S00146	BOM_TABLE_ALTS	ALL	0402,5.1uF@3V, Taiyo

CRITICAL PART#	COMMENT
138S00146	0402,5.1uF@3V

PART NUMBER	ALTERNATE FOR PART NUMBER	BOM OPTION	REF DES	COMMENTS:
138S00140	138S00141	BOM_TABLE_ALTS	ALL	0201,1.1uF@3V, Kyocera
138S00142	138S00141	BOM_TABLE_ALTS	ALL	0201,1.1uF@3V, SEMCO
138S00166	138S00141	BOM_TABLE_ALTS	ALL	0201,1.1uF@3V, Taiyo

CRITICAL PART#	COMMENT
138S00141	0201,1.1uF@3V

Global Ferrites

PART NUMBER	ALTERNATE FOR PART NUMBER	BOM OPTION	REF DES	COMMENTS:
152S00558	152S00557	BOM_TABLE_ALTS	ALL	IND,MLD,0.47UH,20%,2.5A,80MO,1608
155S00194	155S0610	BOM_TABLE_ALTS	ALL	FERR BD,150 OHM,25%,200MA,0.7 DCR,01005
155S00200	155S0610	BOM_TABLE_ALTS	ALL	FERR BD,150 OHM,25%,200MA,0.7 DCR,01005

CRITICAL PART#	COMMENT
152S00557	IND,MLD,0.47UH,20%,2.5A,80MO,1608
155S0610	FERR BD,150 OHM,25%,200MA,0.7 DCR,01005

Global R/C Alternates

PART NUMBER	ALTERNATE FOR PART NUMBER	BOM OPTION	REF DES	COMMENTS:
138S0648	138S0652	BOM_TABLE_ALTS	ALL	CAP,X5R,4.7UF,6.3V,0.65MM,0402,TAIYO
138S00024	138S0986	BOM_TABLE_ALTS	ALL	CAP,CER,3-TERM,7.5UF,20%,4V,0402,TAIYO/TDK
138S0706	138S0739	BOM_TABLE_ALTS	ALL	CAP,CER,1UF,20%,10V,X5R,0201,MURATA
138S0945	138S0739	BOM_TABLE_ALTS	ALL	CAP,CER,1UF,20%,10V,X5R,0201,KYOCERA
138S0739	138S0706	BOM_TABLE_ALTS	ALL	CAP,CER,X5R,0.22UF,20%,6.3V,20%
132S0436	132S0400	BOM_TABLE_ALTS	ALL	CAP,CER,X5R,0.22UF,20%,6.3V,01005
138S00049	138S0831	BOM_TABLE_ALTS	ALL	CAP,CER,X5R,2.2UF,20%,6.3V,0201

CRITICAL PART#	COMMENT
138S0652	CAP,X5R,4.7UF,6.3V,0.65MM,0402,TAIYO
138S0986	CAP,CER,3-TERM,7.5UF,20%,4V,0402,TAIYO/TDK
138S0739	CAP,CER,1UF,20%,10V,X5R,0201,MURATA

138S0706	CAP,CER,X5R,0.22UF,20%,6.3V,20%
132S0400	CAP,CER,X5R,0.22UF,20%,6.3V,01005
138S0831	CAP,CER,X5R,2.2UF,20%,6.3V,0201

Global Inductors

PART NUMBER	ALTERNATE FOR PART NUMBER	BOM OPTION	REF DES	COMMENTS:
152S00653	152S00651	BOM_TABLE_ALTS	ALL	IND,1.2UH,3A,2016,0.65Z
152S00654	152S00652	BOM_TABLE_ALTS	ALL	IND,1.2UH,3A,2016,0.8Z

CRITICAL PART#	COMMENT
152S00651	IND,1.2UH,3A,2016,0.65Z
152S00652	IND,1.2UH,3A,2016,0.8Z

Multi-Vendor Criticals

CRITICAL PART#	COMMENT
138S0979	CAP,CER,X5R,10UF,20%,10V,0402,H=0.65MM
138S0683	CAP,CER,X5R,1UF,10%,25V,0402
132S0663	CAP,CER,X5R,1UF,10%,25V,0402
132S0288	CAP,CER,X5R,0.1UF,10%,16V,0201
132S0275	CAP,CER,X5R,470PF,10%,10V,01005
132S0245	CAP,CER,X5R,0.01UF,10%,6.3V,01005

CRITICAL PART#	COMMENT
132S00008	CAP,CER,0.1UF,10%,50V,X7R,0402
131S0804	CAP,CER,27PF,5%,C0G,25V,0201
131S0307	CAP,CER,NP0/C0G,100PF,5%,16V,01005
131S00053	CAP,CER,C0G,220PF,5%,10V,01005
117S0055	RES,MF,1/20W,2M OHM,5,0201,SMD
107S0257	THERMISTOR,NTC,10K OHM,1%,B=3435,01005

Iktara

PART#	QTY	DESCRIPTION	REFERENCE DESIGNATOR(S)	CRITICAL	BOM OPTION
132S00021	8	CAP,CER,0.082UF,10%,50V,X7R,0402	C3452,C3453,C3454,C3456,C3461,C3462,C3463,C3464	NO	COMMON
132S0423	2	CAP,CER,0.022UF,50V,X7R,10%,0402	C3451,C3465	CRITICAL	COMMON
132S0423	2	CAP,CER,0.022UF,50V,X7R,10%,0402	C3455,C3466	CRITICAL	NOSTUFF

PART NUMBER	ALTERNATE FOR PART NUMBER	BOM OPTION	REF DES	COMMENTS:
685-00185	685-00184	BOM_TABLE_ALTS	SUBBOM_DS	SUBBOM,MLB,BOT,DIODES,ONSEMI,X893

PART#	QTY	DESCRIPTION	REFERENCE DESIGNATOR(S)	CRITICAL	BOM OPTION
685-00184	1	SUBBOM,MLB,BOT,DIODES,DIODES,X893	SUBBOM_DS	CRITICAL	COMMON
371S00133	4	DIODES,SHOTTKY DIODE,30V,2A,0603	D3400,D3401,D3402,D3403	CRITICAL	DIODES_DS
371S00132	4	ONSEMI,SHOTTKY DIODE,30V,2A,0603	D3400,D3401,D3402,D3403	CRITICAL	ONSEMI_DS

Soft-Term Cap Sub BOMs

PART#	QTY	DESCRIPTION	REFERENCE DESIGNATOR(S)	CRITICAL	BOM OPTION
685-00159	1	SUBBOM,MLB,BOT,CAP,TYPICAL,X893	SUBBOM_CAP	CRITICAL	COMMON

Touch/Luna B2B

PART#	QTY	DESCRIPTION	REFERENCE DESIGNATOR(S)	CRITICAL	BOM OPTION
138S00159	1	CAP,SOFT-TERM,2.2UF,6.3V,0201,KYOCERA	C5890	CRITICAL	SOFT_CAP
138S0831	1	CAP,TYPICAL,2.2UF,6.3V,0201,MURATA	C5890	CRITICAL	TYPICAL_CAP

PART NUMBER	ALTERNATE FOR PART NUMBER	BOM OPTION	REF DES	COMMENTS:
685-00160	685-00159	BOM_TABLE_ALTS	SUBBOM_CAP	SUBBOM,MLB,BOT,CAP,SOFT,X893

SYNC_MASTER= SYNC_DATE=03/08/2017

PAGE TITLE

SYSTEM:BOM Tables

Apple Inc.

DRAWING NUMBER	SIZE
051-02247	D

REVISION 7.0.0

BRANCH evt-1

PAGE 2 OF 80

SHEET 2 OF 34

NOTICE OF PROPRIETARY PROPERTY:

THE INFORMATION CONTAINED HEREIN IS THE PROPRIETARY PROPERTY OF APPLE INC.
THE POSESSOR AGREES TO THE FOLLOWING:

I TO MAINTAIN THIS DOCUMENT IN CONFIDENCE

II NOT TO REPRODUCE OR COPY IT

III NOT TO REVEAL OR PUBLISH IT IN WHOLE OR PART

IV ALL RIGHTS RESERVED

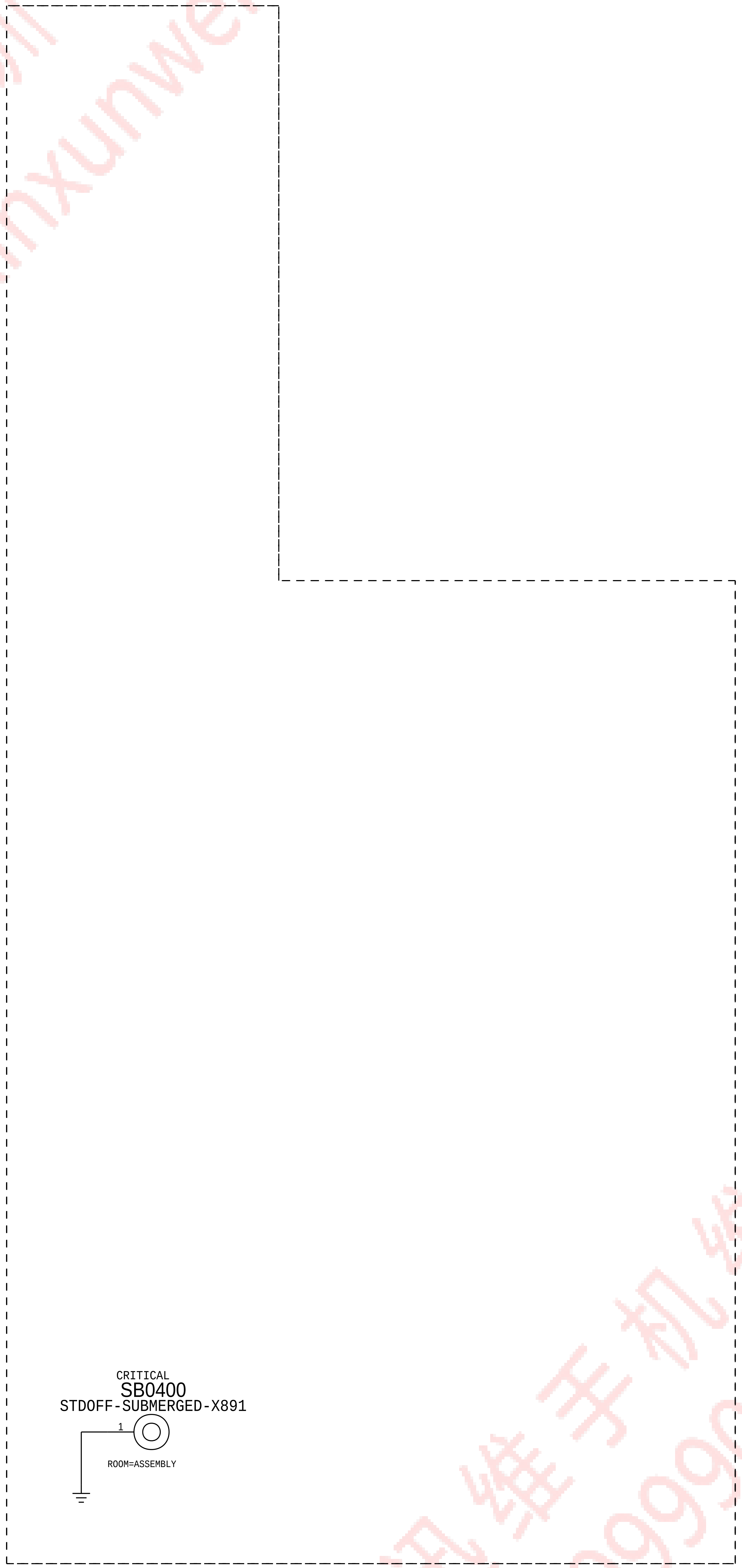
CRITICAL
SB0400
STDOFF-SUBMERGED-X891
1
ROOM=ASSEMBLY

FIDUCIALS

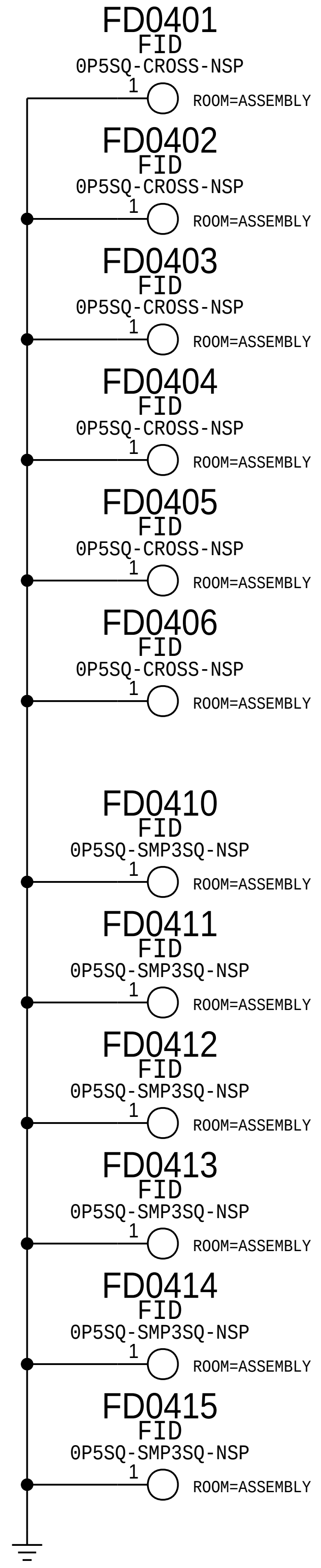
FD0401
FID
0P5SQ-CROSS-NSP
1
ROOM=ASSEMBLY
FD0402
FID
0P5SQ-CROSS-NSP
1
ROOM=ASSEMBLY
FD0403
FID
0P5SQ-CROSS-NSP
1
ROOM=ASSEMBLY
FD0404
FID
0P5SQ-CROSS-NSP
1
ROOM=ASSEMBLY
FD0405
FID
0P5SQ-CROSS-NSP
1
ROOM=ASSEMBLY
FD0406
FID
0P5SQ-CROSS-NSP
1
ROOM=ASSEMBLY
FD0410
FID
0P5SQ-SMP3SQ-NSP
1
ROOM=ASSEMBLY
FD0411
FID
0P5SQ-SMP3SQ-NSP
1
ROOM=ASSEMBLY
FD0412
FID
0P5SQ-SMP3SQ-NSP
1
ROOM=ASSEMBLY
FD0413
FID
0P5SQ-SMP3SQ-NSP
1
ROOM=ASSEMBLY
FD0414
FID
0P5SQ-SMP3SQ-NSP
1
ROOM=ASSEMBLY
FD0415
FID
0P5SQ-SMP3SQ-NSP
1
ROOM=ASSEMBLY

SYNC_DATE=12/01/2016

PAGE TITLE
SYSTEM: Mechanical Components

Apple Inc.

DRAWING NUMBER 051-02247
SIZE D
REVISION 7.0.0
BRANCH evt-1
PAGE 4 OF 80
SHEET 3 OF 34

NOTICE OF PROPRIETARY PROPERTY:

THE INFORMATION CONTAINED HEREIN IS THE PROPRIETARY PROPERTY OF APPLE INC.
THE POSESSOR AGREES TO THE FOLLOWING:
I TO MAINTAIN THIS DOCUMENT IN CONFIDENCE
II NOT TO REPRODUCE OR COPY IT
III NOT TO REVEAL OR PUBLISH IT IN WHOLE OR PART
IV ALL RIGHTS RESERVED

BOOTSTRAPPING:BOARD ID[3]

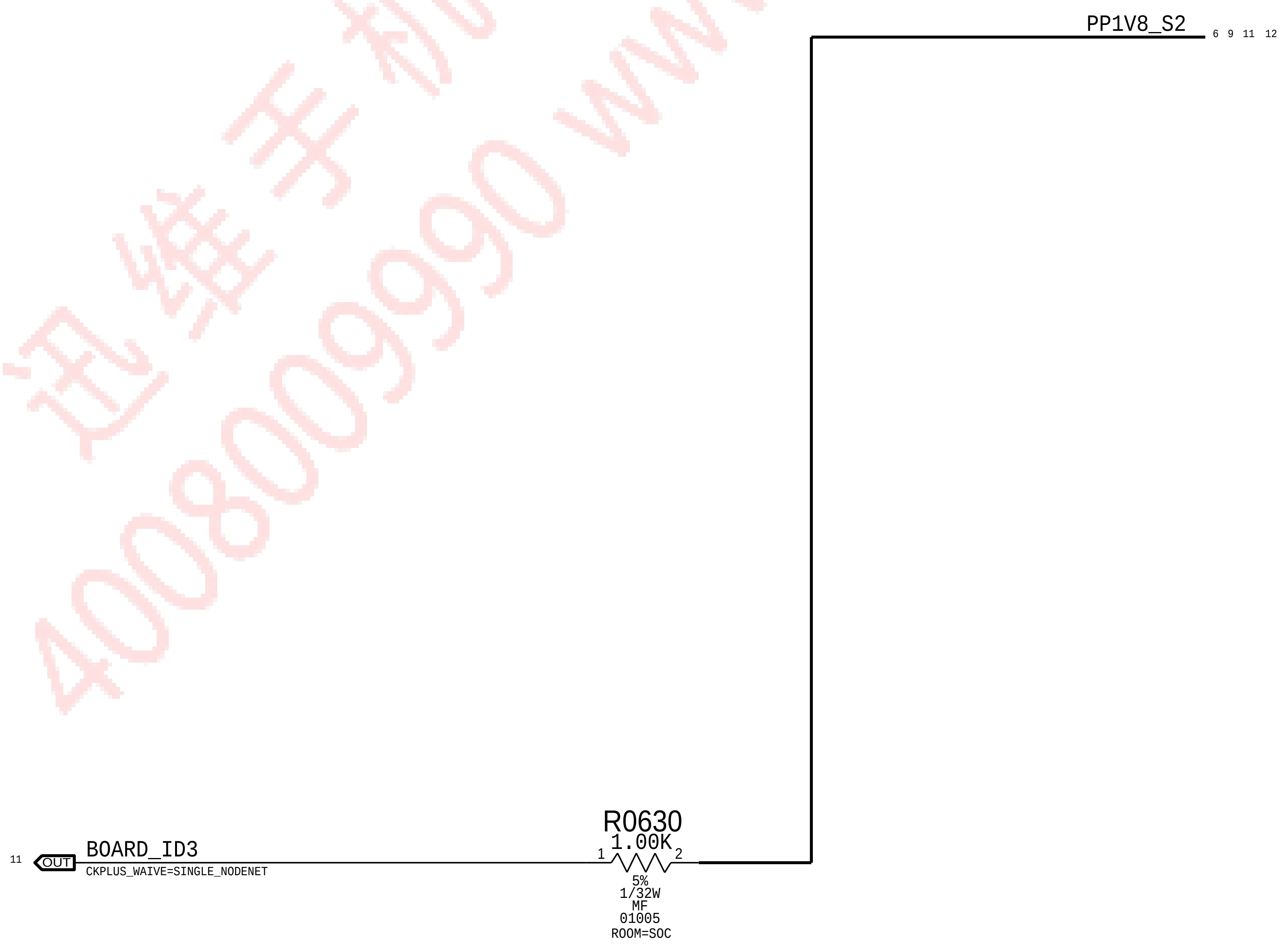

Board Rev[3:0] Float=Low I PU=High	3	2	1	0
	Build Major		Build Minor	
Proto 1	1	1	1	1
Proto 2	1	1	1	0
Proto 3	1	1	0	1
(Spare)	1	1	0	0
EVT	1	0	1	1
(Spare)	1	0	1	0
Carrier	0	1	1	1
(Spare)	0	1	1	0
DVT	0	0	1	1
(Spare)	0	0	1	0
(Spare)	0	0	0	1
PVT	0	0	0	0

Board ID[4:0] Float=Low I PU=High	4	3	2	1	0
	X	Baseband	Form Factor		MLB/Dev
D20 MLB	0	0	0	1	0
D20 Dev	0	0	0	1	1
D21 MLB	0	0	1	0	0
D21 Dev	0	0	1	0	1
D22 MLB	0	0	1	1	0
D22 Dev	0	0	1	1	1
D201 MLB	0	1	0	1	0
D201 Dev	0	1	0	1	1
D211 MLB	0	1	1	0	0
D211 Dev	0	1	1	0	1
D221 MLB	0	1	1	1	0
D221 Dev	0	1	1	1	1

D221 Selected (BOARD_ID3) ->

Boot Config[2:0] Float=Low I PU=High	2	1	0
SPI0	0	0	0
SPI0 Test Mode	0	0	1
SPI0 NAND	0	1	0
SPI0 NAND Test	0	1	1
Slow SPI0 Test	1	1	0

SYNC_MASTER
SYNC_DATE=11/03/2016

PAGE TITLE
BOOTSTRAPPING

Apple Inc.

DRAWING NUMBER 051-02247
SIZE D
REVISION 7.0[illegible]
BRANCH evt-1
PAGE 6 OF 80
SHEET 4 OF 34

NOTICE OF PROPRIETARY PROPERTY:

THE INFORMATION CONTAINED HEREIN IS THE PROPRIETARY PROPERTY OF APPLE INC.
THE POSESSOR AGREES TO THE FOLLOWING:
I TO MAINTAIN THIS DOCUMENT IN CONFIDENCE
II NOT TO REPRODUCE OR COPY IT
III NOT TO REVEAL OR PUBLISH IT IN WHOLE OR PART
IV ALL RIGHTS RESERVED

Test Points

Probe Points

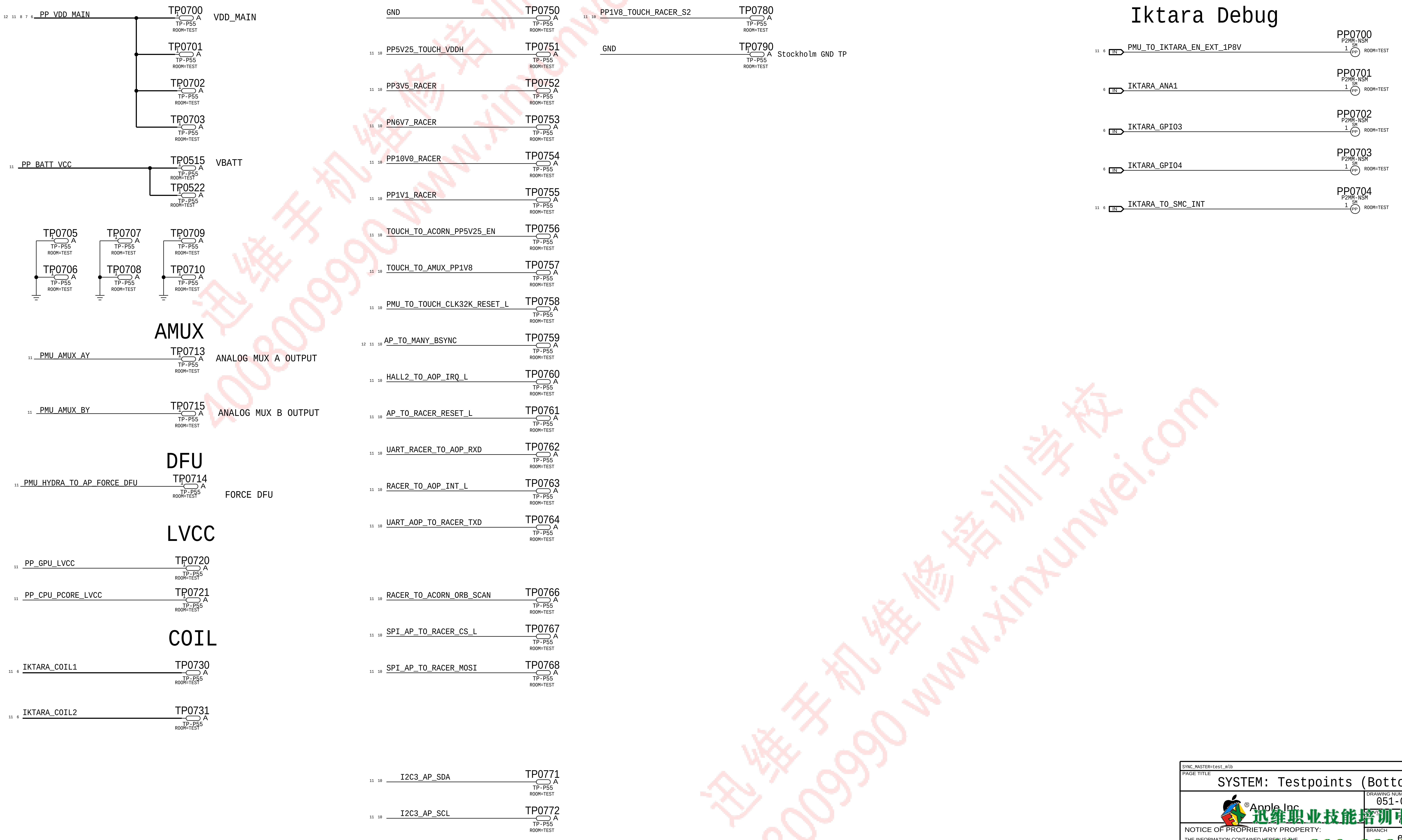

12 11 8 7 6 PP_VDD_MAIN
TP0700 A TP-P55 ROOM=TEST
VDD_MAIN
TP0701 A TP-P55 ROOM=TEST
TP0702 A TP-P55 ROOM=TEST
TP0703 A TP-P55 ROOM=TEST
11 PP_BATT_VCC
TP0515 A TP-P55 ROOM=TEST
VBATT
TP0522 A TP-P55 ROOM=TEST
TP0705 A TP-P55 ROOM=TEST
TP0707 A TP-P55 ROOM=TEST
TP0709 A TP-P55 ROOM=TEST
TP0706 A TP-P55 ROOM=TEST
TP0708 A TP-P55 ROOM=TEST
TP0710 A TP-P55 ROOM=TEST
AMUX
11 PMU_AMUX_AY
TP0713 A TP-P55 ROOM=TEST
ANALOG MUX A OUTPUT
11 PMU_AMUX_BY
TP0715 A TP-P55 ROOM=TEST
ANALOG MUX B OUTPUT
DFU
11 PMU_HYDRA_TO_AP_FORCE_DFU
TP0714 A TP-P55 ROOM=TEST
FORCE DFU
LVCC
11 PP_GPU_LVCC
TP0720 A TP-P55 ROOM=TEST
11 PP_CPU_PCORE_LVCC
TP0721 A TP-P55 ROOM=TEST
COIL
11 6 IKTARA_COIL1
TP0730 A TP-P55 ROOM=TEST
11 6 IKTARA_COIL2
TP0731 A TP-P55 ROOM=TEST
GND
TP0750 A TP-P55 ROOM=TEST
11 10 PP5V25_TOUCH_VDDH
TP0751 A TP-P55 ROOM=TEST
11 10 PP3V5_RACER
TP0752 A TP-P55 ROOM=TEST
11 10 PN6V7_RACER
TP0753 A TP-P55 ROOM=TEST
11 10 PP10V0_RACER
TP0754 A TP-P55 ROOM=TEST
11 10 PP1V1_RACER
TP0755 A TP-P55 ROOM=TEST
11 10 TOUCH_TO_ACORN_PP5V25_EN
TP0756 A TP-P55 ROOM=TEST
11 10 TOUCH_TO_AMUX_PP1V8
TP0757 A TP-P55 ROOM=TEST
11 10 PMU_TO_TOUCH_CLK32K_RESET_L
TP0758 A TP-P55 ROOM=TEST
12 11 10 AP_TO_MANY_BSYNC
TP0759 A TP-P55 ROOM=TEST
11 10 HALL2_TO_AOP_IRQ_L
TP0760 A TP-P55 ROOM=TEST
11 10 AP_TO_RACER_RESET_L
TP0761 A TP-P55 ROOM=TEST
11 10 UART_RACER_TO_AOP_RXD
TP0762 A TP-P55 ROOM=TEST
11 10 RACER_TO_AOP_INT_L
TP0763 A TP-P55 ROOM=TEST
11 10 UART_AOP_TO_RACER_TXD
TP0764 A TP-P55 ROOM=TEST
11 10 RACER_TO_ACORN_ORB_SCAN
TP0766 A TP-P55 ROOM=TEST
11 10 SPI_AP_TO_RACER_CS_L
TP0767 A TP-P55 ROOM=TEST
11 10 SPI_AP_TO_RACER_MOSI
TP0768 A TP-P55 ROOM=TEST
11 10 I2C3_AP_SDA
TP0771 A TP-P55 ROOM=TEST
11 10 I2C3_AP_SCL
TP0772 A TP-P55 ROOM=TEST
11 10 PP1V8_TOUCH_RACER_S2
TP0780 A TP-P55 ROOM=TEST
GND
TP0790 A TP-P55 ROOM=TEST
Stockholm GND TP
Iktara Debug
11 6 IN PMU_TO_IKTARA_EN_EXT_1P8V
PP0700 P2MM-NSM SM 1 PP ROOM=TEST
6 IN IKTARA_ANA1
PP0701 P2MM-NSM SM 1 PP ROOM=TEST
6 IN IKTARA_GPIO3
PP0702 P2MM-NSM SM 1 PP ROOM=TEST
6 IN IKTARA_GPIO4
PP0703 P2MM-NSM SM 1 PP ROOM=TEST
11 6 IN IKTARA_TO_SMC_INT
PP0704 P2MM-NSM SM 1 PP ROOM=TEST

SYNC_MASTER=test_mlb SYNC_DATE=01/17/2017

PAGE TITLE
SYSTEM: Testpoints (Bottom)

Apple Inc.

DRAWING NUMBER 051-02247
SIZE D
REVISION 7.0.0
BRANCH evt-1
PAGE 7 OF 80
SHEET 5 OF 34

NOTICE OF PROPRIETARY PROPERTY:

THE INFORMATION CONTAINED HEREIN IS THE PROPRIETARY PROPERTY OF APPLE INC.
THE POSESSOR AGREES TO THE FOLLOWING:
I TO MAINTAIN THIS DOCUMENT IN CONFIDENCE
II NOT TO REPRODUCE OR COPY IT
III NOT TO REVEAL OR PUBLISH IT IN WHOLE OR PART
IV ALL RIGHTS RESERVED

Iktara

PP_IKTARA_VRECT
C3445 220PF 5% 25V C0G 01005
C3411 2.2UF 20% 25V X5R 0402-4
C3412 2.2UF 20% 25V X5R 0402-4
C3440 2.2UF 20% 25V X5R 0402-4
C3441 2.2UF 20% 25V X5R 0402-4
R3401 0.020 1% 1/6W MF 0402
XW3401
XW3400
PP_IKTARA_VMID
C3413 2.2UF 20% 25V X5R 0402-4
C3442 2.2UF 20% 25V X5R 0402-4
C3443 220PF 5% 25V C0G 01005
D3400 DSN2 NSR20F30NX
D3401 DSN2 NSR20F30NX
D3402 DSN2 NSR20F30NX
D3403 DSN2 NSR20F30NX
OMIT_TABLE
ROOM=IKTARA
CRITICAL
U3400
BC59355A2
WLCSP
VRECT_VDD
VRECT_S
VMID_S
VMID_R_VDD
VMID_VDD
CLAMP1
COMM1
BOOT1_VDD
AC1
AC2
BOOT2_VDD
COMM2
CLAMP2
ANA1
ANA2
ANA3
ANA4
REFBP
DIGTEST
RGND
PGND
AVSS
HV_GPO1
HV_GPO2
BOOTB_VDD
SW
VOUT
VMID_AUX_SW_VDD
VMID_AUX_VDD
VDD5V
VDIG_CORE_VDD
VDDO
VAUX_1P8_VDD
SDA
SCL
INT
RESET*
GPIO1
GPIO2
GPIO3/SWDIO
GPIO4/SWCLK
GPIO5
GPIO6
GPIO7
EN_EXT_1P8
VSYS_ANA_VDD
VSYS_1P8_VDD
OTP_WREN
NC
To Coil
IKTARA_COIL1
R3450 100K 1% 1/20W MF 201
C3451 0.1UF 10% 50V CER-X7R 0402
C3452 0.1UF
C3453 0.1UF
C3454 0.1UF
C3455 0.1UF
C3456 0.1UF
To Coil
IKTARA_COIL2
R3460 100K 1% 1/20W MF 201
C3461 0.1UF
C3462 0.1UF
C3463 0.1UF
C3464 0.1UF
C3465 0.1UF
C3466 0.1UF
C3406 0.033UF 10% 50V X7R 0402
C3404 0.1UF 10% 16V X5R-CERM 0201
NOSTUFF
C3402 2200PF 10% 50V X5R 0201
C3403 2200PF 10% 50V X5R 0201
C3405 0.1UF 10% 16V X5R-CERM 0201
C3407 0.033UF 10% 50V X7R 0402
IKTARA_COMM1
IKTARA_BOOT1
IKTARA_AC1
IKTARA_AC2
IKTARA_BOOT2
IKTARA_COMM2
IKTARA_ANA1
PP_VDD_MAIN
R3422 0.00 0% 1/32W MF 01005
PP_VDD_MAIN_IKTARA
PP_VBUS2_IKTARA
C3415 1UF 10% 25V X5R 402
C3444 220PF 5% 25V C0G 01005
Pull-Ups
PP_VDD_MAIN
R3406 2M 5% 1/20W MF 201
OMIT
XW3402
SHORT-20L-0.05MM-SM
IKTARA_VOUT_SNS
PP5V0_VMID_AUX_IKTARA
PP5V0_VDD_IKTARA
PP1V5_VDIG_CORE_IKTARA
PP1V8_IKTARA
PP1V8_IKTARA
R3407 10K 5% 1/32W MF 01005
C3419 1UF 20% 6.3V X5R 0201
C3418 1UF 20% 6.3V X5R 0201
C3417 4UF 20% 6.3V CERM-X5R 0201
C3416 2.2UF 20% 6.3V X5R-CERM 0201-2
I2C0_SMC_SDA
I2C0_SMC_SCL
IKTARA_TO_SMC_INT
PMU_TO_IKTARA_RESET_R_L
R3420 100 5% 1/32W MF 01005
PMU_TO_IKTARA_RESET_L
IKTARA_GPIO3
IKTARA_GPIO4
IKTARA_GPIO7
PMU_TO_IKTARA_EN_EXT_1P8V_R
R3421 100 5% 1/32W MF 01005
PMU_TO_IKTARA_EN_EXT_1P8V
PP_VDD_MAIN
PP1V8_S2
R3408 1.00K 5% 1/32W MF 01005
IN
OUT
BI

SYNC_MASTER=mlb_bot
SYNC_DATE=04/04/2017

PAGE TITLE
SYSTEM POWER: Iktara

Apple Inc.

DRAWING NUMBER	051-02247
SIZE	D
REVISION	7.0.0
BRANCH	evt-1
PAGE	34 OF 80
SHEET	6 OF 34

NOTICE OF PROPRIETARY PROPERTY:

THE INFORMATION CONTAINED HEREIN IS THE PROPRIETARY PROPERTY OF APPLE INC. THE POSESSOR AGREES TO THE FOLLOWING:

I TO MAINTAIN THIS DOCUMENT IN CONFIDENCE
II NOT TO REPRODUCE OR COPY IT
III NOT TO REVEAL OR PUBLISH IT IN WHOLE OR PART
IV ALL RIGHTS RESERVED

South Speaker Amplifier

APN: 338S00295

I2C ADDRESS: 1000 000x
0x80

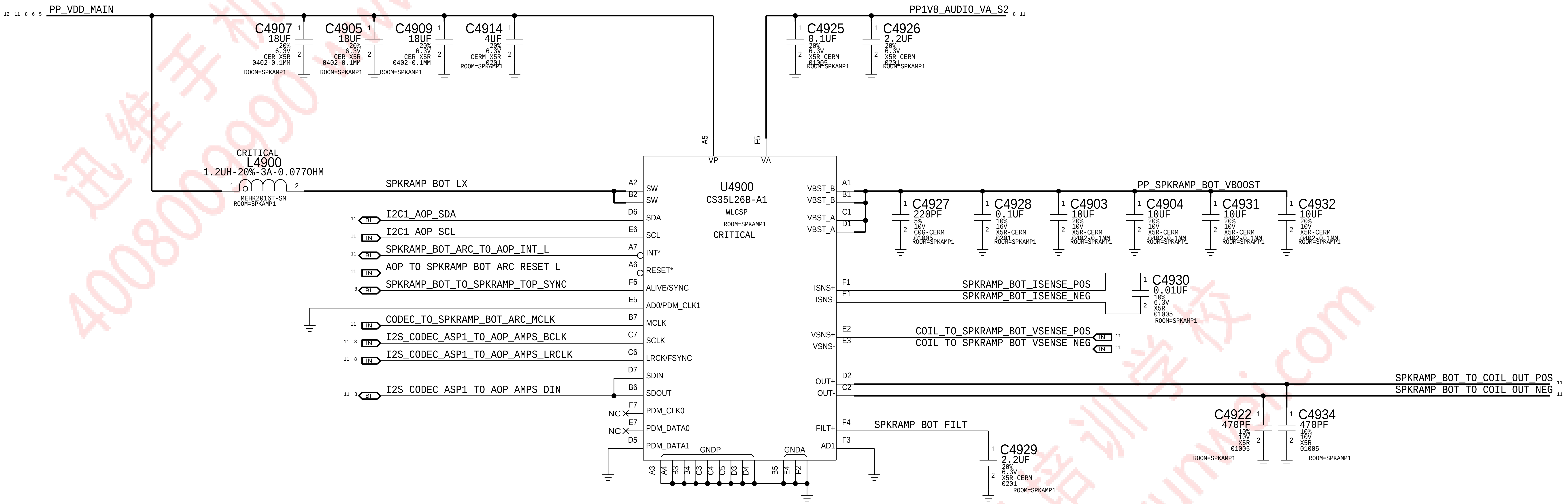
12 11 8 6 5 PP_VDD_MAIN
C4907 18UF 20% 6.3V CER-X5R 0402-0.1MM ROOM=SPKAMP1
C4905 18UF 20% 6.3V CER-X5R 0402-0.1MM ROOM=SPKAMP1
C4909 18UF 20% 6.3V CER-X5R 0402-0.1MM ROOM=SPKAMP1
C4914 4UF 20% 6.3V CERM-X5R 0201 ROOM=SPKAMP1
PP1V8_AUDIO_VA_S2 8 11
C4925 0.1UF 20% 6.3V X5R-CERM 01005 ROOM=SPKAMP1
C4926 2.2UF 20% 6.3V X5R-CERM 0201 ROOM=SPKAMP1
CRITICAL
L4900
1.2UH-20%-3A-0.077OHM
MEHK2016T-SM
ROOM=SPKAMP1
SPKRAMP_BOT_LX
11 BI I2C1_AOP_SDA
11 IN I2C1_AOP_SCL
11 BI SPKRAMP_BOT_ARC_TO_AOP_INT_L
11 IN AOP_TO_SPKRAMP_BOT_ARC_RESET_L
8 BI SPKRAMP_BOT_TO_SPKRAMP_TOP_SYNC
11 IN CODEC_TO_SPKRAMP_BOT_ARC_MCLK
11 8 IN I2S_CODEC_ASP1_TO_AOP_AMPS_BCLK
11 8 IN I2S_CODEC_ASP1_TO_AOP_AMPS_LRCLK
11 8 BI I2S_CODEC_ASP1_TO_AOP_AMPS_DIN
NC
NC
A5 F5
VP VA
U4900
CS35L26B-A1
WLCSP
ROOM=SPKAMP1
CRITICAL
A2 SW
B2 SW
D6 SDA
E6 SCL
A7 INT*
A6 RESET*
F6 ALIVE/SYNC
E5 AD0/PDM_CLK1
B7 MCLK
C7 SCLK
C6 LRCK/FSYNC
D7 SDIN
B6 SDOUT
F7 PDM_CLK0
E7 PDM_DATA0
D5 PDM_DATA1
GNDP GNDA
A3 A4 B3 B4 C3 C4 C5 D3 D4 B5 E4 F2
VBST_B A1
VBST_B B1
VBST_A C1
VBST_A D1
ISNS+ F1
ISNS- E1
VSNS+ E2
VSNS- E3
OUT+ D2
OUT- C2
FILT+ F4
AD1 F3
PP_SPKRAMP_BOT_VBOOST
C4927 220PF 5% 10V C0G-CERM 01005 ROOM=SPKAMP1
C4928 0.1UF 10% 16V X5R-CERM 0201 ROOM=SPKAMP1
C4903 10UF 20% 10V X5R-CERM 0402-0.1MM ROOM=SPKAMP1
C4904 10UF 20% 10V X5R-CERM 0402-0.1MM ROOM=SPKAMP1
C4931 10UF 20% 10V X5R-CERM 0402-0.1MM ROOM=SPKAMP1
C4932 10UF 20% 10V X5R-CERM 0402-0.1MM ROOM=SPKAMP1
SPKRAMP_BOT_ISENSE_POS
SPKRAMP_BOT_ISENSE_NEG
C4930 0.01UF 10% 6.3V X5R 01005 ROOM=SPKAMP1
COIL_TO_SPKRAMP_BOT_VSENSE_POS IN 11
COIL_TO_SPKRAMP_BOT_VSENSE_NEG IN 11
SPKRAMP_BOT_TO_COIL_OUT_POS 11
SPKRAMP_BOT_TO_COIL_OUT_NEG 11
SPKRAMP_BOT_FILT
C4929 2.2UF 20% 6.3V X5R-CERM 0201 ROOM=SPKAMP1
C4922 470PF 10% 10V X5R 01005 ROOM=SPKAMP1
C4934 470PF 10% 10V X5R 01005 ROOM=SPKAMP1

SYNC_MASTER=mlb_bot SYNC_DATE=04/04/2017

PAGE TITLE
AUDIO: Speaker Amp Bottom

Apple Inc.

DRAWING NUMBER 051-02247
SIZE D
REVISION 7.0.0
BRANCH evt-1
PAGE 49 OF 80
SHEET 7 OF 34

NOTICE OF PROPRIETARY PROPERTY:

THE INFORMATION CONTAINED HEREIN IS THE PROPRIETARY PROPERTY OF APPLE INC.
THE POSESSOR AGREES TO THE FOLLOWING:

I TO MAINTAIN THIS DOCUMENT IN CONFIDENCE
II NOT TO REPRODUCE OR COPY IT
III NOT TO REVEAL OR PUBLISH IT IN WHOLE OR PART
IV ALL RIGHTS RESERVED

Pull Downs

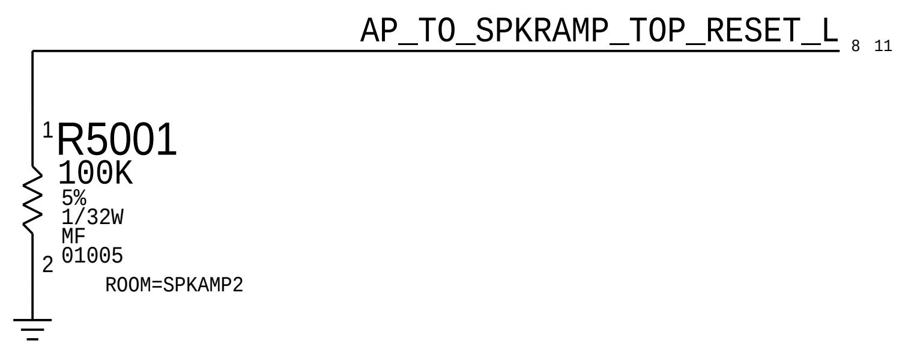
AP_TO_SPKRAMP_TOP_RESET_L 8 11
1 R5001
100K
5%
1/32W
MF
2 01005
ROOM=SPKAMP2

North Speaker Amplifier

APN: 338S00295

I2C ADDRESS: 1000 000x

0x80

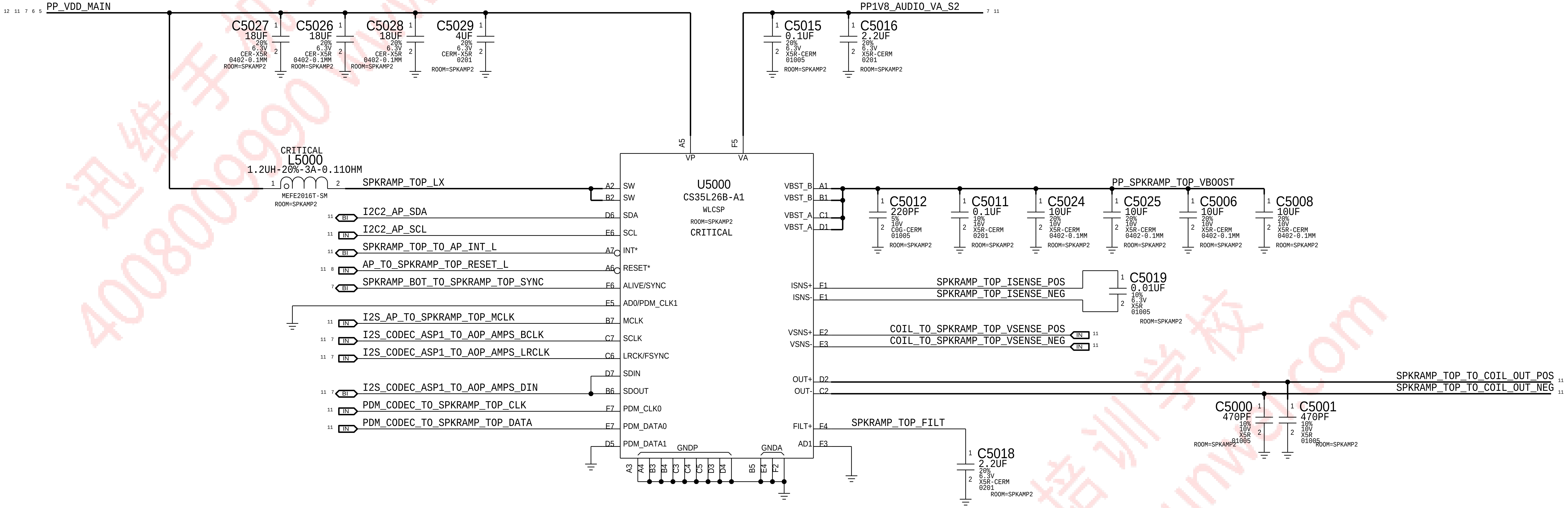
12 11 7 6 5 PP_VDD_MAIN
C5027 18UF 20% 6.3V CER-X5R 0402-0.1MM ROOM=SPKAMP2
C5026 18UF 20% 6.3V CER-X5R 0402-0.1MM ROOM=SPKAMP2
C5028 18UF 20% 6.3V CER-X5R 0402-0.1MM ROOM=SPKAMP2
C5029 4UF 20% 6.3V CERM-X5R 0201 ROOM=SPKAMP2
PP1V8_AUDIO_VA_S2 7 11
C5015 0.1UF 20% 6.3V X5R-CERM 01005 ROOM=SPKAMP2
C5016 2.2UF 20% 6.3V X5R-CERM 0201 ROOM=SPKAMP2
CRITICAL
L5000
1.2UH-20%-3A-0.11OHM
MEFE2016T-SM
ROOM=SPKAMP2
SPKRAMP_TOP_LX
U5000
CS35L26B-A1
WLCSP
ROOM=SPKAMP2
CRITICAL
A5 VP
F5 VA
A2 SW
B2 SW
D6 SDA
E6 SCL
A7 INT*
A6 RESET*
F6 ALIVE/SYNC
E5 AD0/PDM_CLK1
B7 MCLK
C7 SCLK
C6 LRCK/FSYNC
D7 SDIN
B6 SDOUT
F7 PDM_CLK0
E7 PDM_DATA0
D5 PDM_DATA1
GNDP
GNDA
A3 A4 B3 B4 C3 C4 C5 D3 D4 B5 E4 F2
VBST_B A1
VBST_B B1
VBST_A C1
VBST_A D1
ISNS+ F1
ISNS- E1
VSNS+ E2
VSNS- E3
OUT+ D2
OUT- C2
FILT+ F4
AD1 F3
11 BI I2C2_AP_SDA
11 IN I2C2_AP_SCL
11 BI SPKRAMP_TOP_TO_AP_INT_L
11 8 IN AP_TO_SPKRAMP_TOP_RESET_L
7 BI SPKRAMP_BOT_TO_SPKRAMP_TOP_SYNC
11 IN I2S_AP_TO_SPKRAMP_TOP_MCLK
11 7 IN I2S_CODEC_ASP1_TO_AOP_AMPS_BCLK
11 7 IN I2S_CODEC_ASP1_TO_AOP_AMPS_LRCLK
11 7 BI I2S_CODEC_ASP1_TO_AOP_AMPS_DIN
11 IN PDM_CODEC_TO_SPKRAMP_TOP_CLK
11 IN PDM_CODEC_TO_SPKRAMP_TOP_DATA
PP_SPKRAMP_TOP_VBOOST
C5012 220PF 5% 10V C0G-CERM 01005 ROOM=SPKAMP2
C5011 0.1UF 10% 16V X5R-CERM 0201 ROOM=SPKAMP2
C5024 10UF 20% 10V X5R-CERM 0402-0.1MM ROOM=SPKAMP2
C5025 10UF 20% 10V X5R-CERM 0402-0.1MM ROOM=SPKAMP2
C5006 10UF 20% 10V X5R-CERM 0402-0.1MM ROOM=SPKAMP2
C5008 10UF 20% 10V X5R-CERM 0402-0.1MM ROOM=SPKAMP2
SPKRAMP_TOP_ISENSE_POS
SPKRAMP_TOP_ISENSE_NEG
C5019 0.01UF 10% 6.3V X5R 01005 ROOM=SPKAMP2
COIL_TO_SPKRAMP_TOP_VSENSE_POS IN 11
COIL_TO_SPKRAMP_TOP_VSENSE_NEG IN 11
SPKRAMP_TOP_TO_COIL_OUT_POS 11
SPKRAMP_TOP_TO_COIL_OUT_NEG 11
C5000 470PF 10% 10V X5R 01005 ROOM=SPKAMP2
C5001 470PF 10% 10V X5R 01005 ROOM=SPKAMP2
SPKRAMP_TOP_FILT
C5018 2.2UF 20% 6.3V X5R-CERM 0201 ROOM=SPKAMP2

SYNC_MASTER=mlb_bot SYNC_DATE=04/04/2017

PAGE TITLE

AUDIO: Speaker Amp Top

Apple Inc.

DRAWING NUMBER 051-02247

SIZE D

REVISION 7.0.0

BRANCH evt-1

PAGE 50 OF 80

SHEET 8 OF 34

NOTICE OF PROPRIETARY PROPERTY:

THE INFORMATION CONTAINED HEREIN IS THE PROPRIETARY PROPERTY OF APPLE INC.
THE POSESSOR AGREES TO THE FOLLOWING:

I TO MAINTAIN THIS DOCUMENT IN CONFIDENCE
II NOT TO REPRODUCE OR COPY IT
III NOT TO REVEAL OR PUBLISH IT IN WHOLE OR PART
IV ALL RIGHTS RESERVED

Hall Effect

APN:353S3697

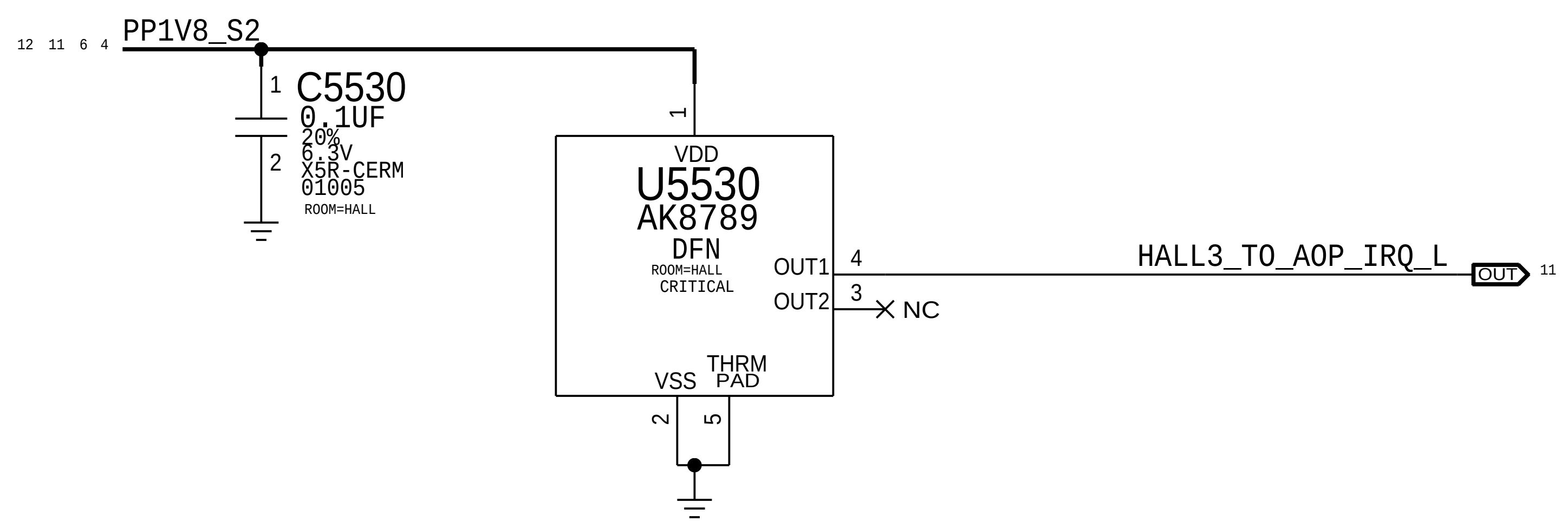
12 11 6 4
PP1V8_S2
C5530
1
0.1UF
20%
6.3V
X5R-CERM
01005
2
ROOM=HALL
1
VDD
U5530
AK8789
DFN
ROOM=HALL
CRITICAL
OUT1
4
OUT2
3
NC
HALL3_TO_AOP_IRQ_L
OUT
11
VSS
THRM PAD
2
5

PAGE TITLE
HALL EFFECT

Apple Inc.

DRAWING NUMBER 051-02247
SIZE D
REVISION 7.0
BRANCH evt-1
PAGE 55 OF 80
SHEET 9 OF 34

NOTICE OF PROPRIETARY PROPERTY:

THE INFORMATION CONTAINED HEREIN IS THE PROPRIETARY PROPERTY OF APPLE INC.
THE POSESSOR AGREES TO THE FOLLOWING:
I TO MAINTAIN THIS DOCUMENT IN CONFIDENCE
II NOT TO REPRODUCE OR COPY IT
III NOT TO REVEAL OR PUBLISH IT IN WHOLE OR PART
IV ALL RIGHTS RESERVED

迅维职业技能培训中心
400-800-9990
CHINAFIX

Racer I/O
AP_TO_RACER_RESET_L
FL5800 150OHM-25%-200MA-0.7DCR 01005
AP_TO_RACER_RESET_CONN_L
C5800 220PF 5% 10V C0G-CERM 01005
AP_TO_RACER_REF_CLK
R5801 0.00 0% 1/32W MF 01005
AP_TO_RACER_REF_CLK_C
C5860 27PF 5% 25V C0G 0201
AP_TO_RACER_REF_CLK_CONN
RACER_TO_AOP_INT_L
FL5802 150OHM-25%-200MA-0.7DCR 01005
RACER_TO_AOP_INT_CONN_L
C5802 220PF 5% 10V C0G-CERM 01005
UART_AOP_TO_RACER_TXD
FL5803 150OHM-25%-200MA-0.7DCR 01005
UART_AOP_TO_RACER_TXD_CONN
C5803 56PF 5% 25V NP0-C0G-CERM 01005
UART_RACER_TO_AOP_RXD
FL5804 150OHM-25%-200MA-0.7DCR 01005
UART_RACER_TO_AOP_RXD_CONN
C5804 56PF 5% 25V NP0-C0G-CERM 01005
RACER_TO_ACORN_ORB_SCAN
FL5805 150OHM-25%-200MA-0.7DCR 01005
RACER_TO_ACORN_ORB_SCAN_CONN
C5805 56PF 5% 25V NP0-C0G-CERM 01005
SPI_AP_TO_RACER_CS_L
FL5806 150OHM-25%-200MA-0.7DCR 01005
SPI_AP_TO_RACER_CS_CONN_L
C5806 56PF 5% 25V NP0-C0G-CERM 01005
SPI_AP_TO_RACER_SCLK
R5807 0.00 0% 1/32W MF 01005
SPI_AP_TO_RACER_SCLK_CONN
NOSTUFF C5807 56PF 5% 25V NP0-C0G-CERM 01005
SPI_AP_TO_RACER_MOSI
FL5809 0.00 0% 1/32W MF 01005
SPI_AP_TO_RACER_MOSI_CONN
NOSTUFF C5809 56PF 5% 25V NP0-C0G-CERM 01005
SPI_RACER_TO_AP_MISO
FL5810 150OHM-25%-200MA-0.7DCR 01005
SPI_RACER_TO_AP_MISO_CONN
C5810 56PF 5% 25V NP0-C0G-CERM 01005
AP I2C Filters
I2C3_AP_SDA
R5820 0.00 0% 1/32W MF 01005
I2C3_AP_BI_TOUCH_EEPROM_SDA_CONN
C5820 56PF 5% 25V NP0-C0G-CERM 01005
I2C3_AP_SCL
R5821 0.00 0% 1/32W MF 01005
I2C3_AP_TO_TOUCH_EEPROM_SCL_CONN
C5821 56PF 5% 25V NP0-C0G-CERM 01005
Touch and Misc I/O
TOUCH_TO_ACORN_PP5V25_EN
FL5840 150OHM-25%-200MA-0.7DCR 01005
TOUCH_TO_ACORN_PP5V25_EN_CONN
C5840 220PF 5% 10V C0G-CERM 01005
TOUCH_TO_AMUX_PP1V8
FL5841 150OHM-25%-200MA-0.7DCR 01005
TOUCH_TO_AMUX_PP1V8_CONN
C5841 220PF 5% 10V C0G-CERM 01005
PMU_TO_TOUCH_CLK32K_RESET_L
R5842 33.2 1% 1/32W MF 01005
PMU_TO_TOUCH_CLK32K_RESET_CONN_L
C5842 100PF 5% 16V NP0-C0G 01005
SWD_AOP_TO_MANY_SWCLK
R5844 49.9 1% 1/32W MF 01005
SWD_AOP_TO_RACER_CONN
C5844 100PF 5% 16V NP0-C0G 01005
SWD_AOP_BI_RACER_SWDIO
FL5845 150OHM-25%-200MA-0.7DCR 01005
SWD_AOP_BI_RACER_SWDIO_CONN
NOSTUFF R5845 10K 1% 1/32W MF 01005
C5845 56PF 5% 25V NP0-C0G-CERM 01005
AP_TO_MANY_BSYNC
FL5847 150OHM-25%-200MA-0.7DCR 01005
AP_TO_TOUCH_BSYNC_CONN
C5847 100PF 5% 16V NP0-C0G 01005
Hall Effect
HALL2_TO_AOP_IRQ_L
FL5850 150OHM-25%-200MA-0.7DCR 01005
HALL2_TO_AOP_IRQ_CONN_L
C5850 220PF 5% 10V C0G-CERM 01005
Luna + Touch Connector
Rcpt: 516S00325 <-- This one on MLB
Plug: 516S00326
J5800 AA26DK-S028VA1 F-ST-SM
SPI_AP_TO_RACER_SCLK_CONN
SPI_AP_TO_RACER_CS_CONN_L
AP_TO_RACER_RESET_CONN_L
RACER_TO_ACORN_ORB_SCAN_CONN
SWD_AOP_TO_RACER_CONN
SWD_AOP_BI_RACER_SWDIO_CONN
HALL2_TO_AOP_IRQ_CONN_L
AP_TO_RACER_REF_CLK_CONN
PMU_TO_TOUCH_CLK32K_RESET_CONN_L
I2C3_AP_BI_TOUCH_EEPROM_SDA_CONN
I2C3_AP_TO_TOUCH_EEPROM_SCL_CONN
TOUCH_TO_AMUX_PP1V8_CONN
SPI_AP_TO_RACER_MOSI_CONN
SPI_RACER_TO_AP_MISO_CONN
RACER_TO_AOP_INT_CONN_L
PP10V0_RACER_CONN
UART_RACER_TO_AOP_RXD_CONN
UART_AOP_TO_RACER_TXD_CONN
PP1V8_TOUCH_RACER_CONN
PP1V1_RACER_CONN
PN6V7_RACER_CONN
PP3V5_RACER_CONN
AP_TO_TOUCH_BSYNC_CONN
TOUCH_TO_ACORN_PP5V25_EN_CONN
PP5V25_TOUCH_VDDH_CONN
ROOM=B2B_TOUCH_ORB
Touch And Racer Power
PP1V8_TOUCH_RACER_S2
FL5890 33-OHM-25%-1500MA 0201
PP1V8_TOUCH_RACER_CONN
OMIT_TABLE C5890 2.2UF 20% 6.3V X5R-CERM 0201
C5891 220PF 5% 10V C0G-CERM 01005
PP5V25_TOUCH_VDDH
FL5891 150OHM-25%-0.28A-0.69OHM 01005
PP5V25_TOUCH_VDDH_CONN
C5892 220PF 5% 10V C0G-CERM 01005
PP3V5_RACER
FL5893 33-OHM-25%-1500MA 0201
PP3V5_RACER_CONN
C5893 220PF 5% 10V C0G-CERM 01005
PN6V7_RACER
FL5894 33-OHM-25%-1500MA 0201
PN6V7_RACER_CONN
C5894 220PF 5% 10V C0G-CERM 01005
PP10V0_RACER
FL5895 150OHM-25%-200MA-0.7DCR 01005
PP10V0_RACER_CONN
C5895 220PF 5% 10V C0G-CERM 01005
PP1V1_RACER
FL5896 33-OHM-25%-1500MA 0201
PP1V1_RACER_CONN
C5896 220PF 5% 10V C0G-CERM 01005
ROOM=B2B_TOUCH_ORB

SYNC_MASTER=mlb_bot
SYNC_DATE=04/04/2017

PAGE TITLE
CG: B2B Luna & Touch

Apple Inc.

DRAWING NUMBER 051-02247
SIZE D
REVISION 7.0.0
BRANCH evt-1
PAGE 58 OF 80
SHEET 10 OF 34

NOTICE OF PROPRIETARY PROPERTY:

THE INFORMATION CONTAINED HEREIN IS THE PROPRIETARY PROPERTY OF APPLE INC.
THE POSESSOR AGREES TO THE FOLLOWING:

I TO MAINTAIN THIS DOCUMENT IN CONFIDENCE
II NOT TO REPRODUCE OR COPY IT
III NOT TO REVEAL OR PUBLISH IT IN WHOLE OR PART
IV ALL RIGHTS RESERVED

迅维职业技能培训中心 400-800-9990 www.xinxunwei.com

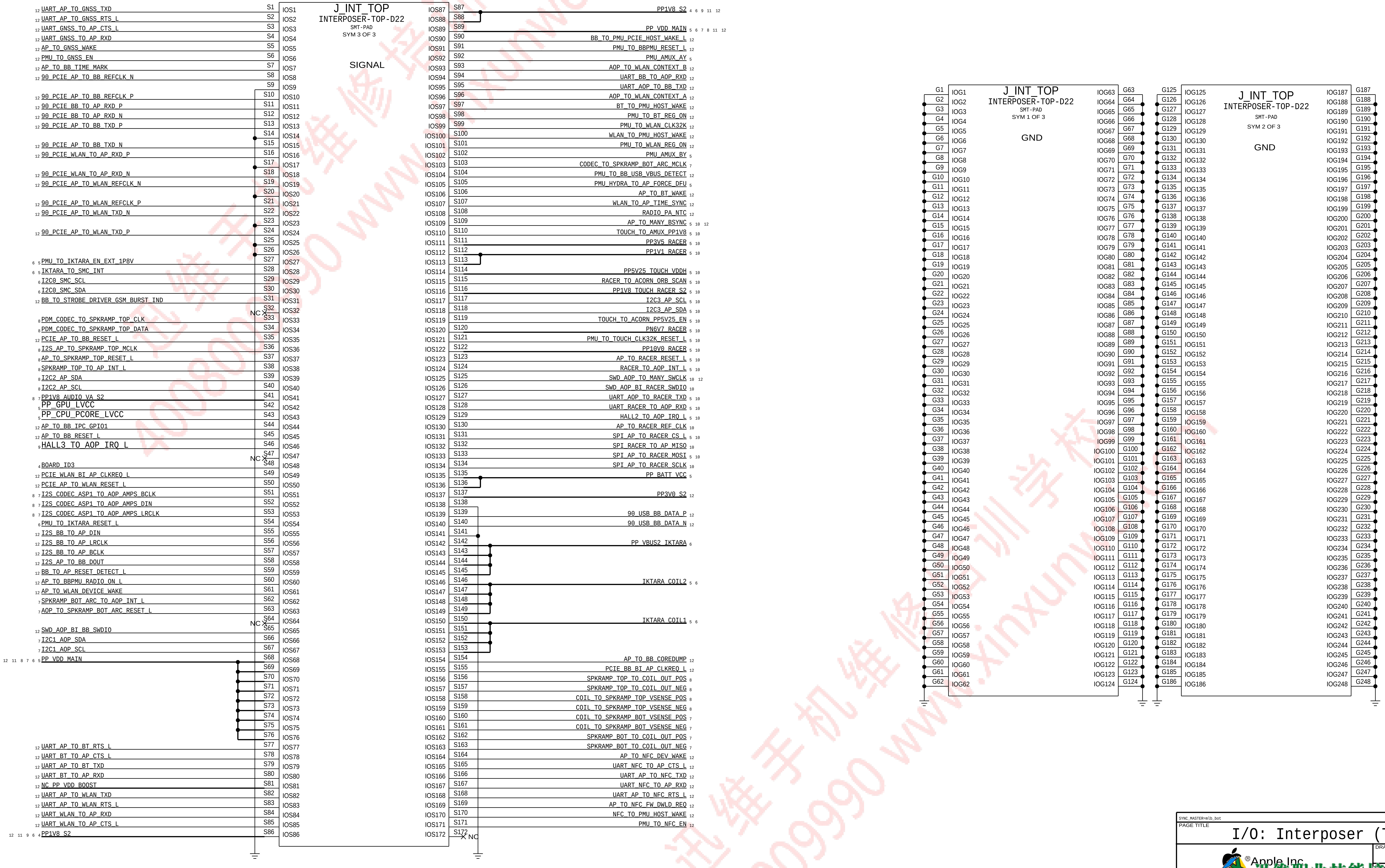
J_INT_TOP
INTERPOSER-TOP-D22
SMT-PAD
SYM 3 OF 3
SIGNAL
S1–S172 / IOS1–IOS172
12 UART_AP_TO_GNSS_TXD
12 UART_AP_TO_GNSS_RTS_L
12 UART_GNSS_TO_AP_CTS_L
12 UART_GNSS_TO_AP_RXD
12 AP_TO_GNSS_WAKE
12 PMU_TO_GNSS_EN
12 AP_TO_BB_TIME_MARK
12 90_PCIE_AP_TO_BB_REFCLK_N
12 90_PCIE_AP_TO_BB_REFCLK_P
12 90_PCIE_BB_TO_AP_RXD_P
12 90_PCIE_BB_TO_AP_RXD_N
12 90_PCIE_AP_TO_BB_TXD_P
12 90_PCIE_AP_TO_BB_TXD_N
12 90_PCIE_WLAN_TO_AP_RXD_P
12 90_PCIE_WLAN_TO_AP_RXD_N
12 90_PCIE_AP_TO_WLAN_REFCLK_N
12 90_PCIE_AP_TO_WLAN_REFCLK_P
12 90_PCIE_AP_TO_WLAN_TXD_N
12 90_PCIE_AP_TO_WLAN_TXD_P
6 5 PMU_TO_IKTARA_EN_EXT_1P8V
6 5 IKTARA_TO_SMC_INT
6 I2C0_SMC_SCL
6 I2C0_SMC_SDA
12 BB_TO_STROBE_DRIVER_GSM_BURST_IND
NC
8 PDM_CODEC_TO_SPKRAMP_TOP_CLK
8 PDM_CODEC_TO_SPKRAMP_TOP_DATA
12 PCIE_AP_TO_BB_RESET_L
8 I2S_AP_TO_SPKRAMP_TOP_MCLK
8 AP_TO_SPKRAMP_TOP_RESET_L
8 SPKRAMP_TOP_TO_AP_INT_L
8 I2C2_AP_SDA
8 I2C2_AP_SCL
8 7 PP1V8_AUDIO_VA_S2
5 PP_GPU_LVCC
5 PP_CPU_PCORE_LVCC
12 AP_TO_BB_IPC_GPIO1
12 AP_TO_BB_RESET_L
9 HALL3_TO_AOP_IRQ_L
NC
4 BOARD_ID3
12 PCIE_WLAN_BI_AP_CLKREQ_L
12 PCIE_AP_TO_WLAN_RESET_L
8 7 I2S_CODEC_ASP1_TO_AOP_AMPS_BCLK
8 7 I2S_CODEC_ASP1_TO_AOP_AMPS_DIN
8 7 I2S_CODEC_ASP1_TO_AOP_AMPS_LRCLK
6 PMU_TO_IKTARA_RESET_L
12 I2S_BB_TO_AP_DIN
12 I2S_BB_TO_AP_LRCLK
12 I2S_BB_TO_AP_BCLK
12 I2S_AP_TO_BB_DOUT
12 BB_TO_AP_RESET_DETECT_L
12 AP_TO_BBPMU_RADIO_ON_L
12 AP_TO_WLAN_DEVICE_WAKE
7 SPKRAMP_BOT_ARC_TO_AOP_INT_L
7 AOP_TO_SPKRAMP_BOT_ARC_RESET_L
NC
12 SWD_AOP_BI_BB_SWDIO
7 I2C1_AOP_SDA
7 I2C1_AOP_SCL
12 11 8 7 6 5 PP_VDD_MAIN
12 UART_AP_TO_BT_RTS_L
12 UART_BT_TO_AP_CTS_L
12 UART_AP_TO_BT_TXD
12 UART_BT_TO_AP_RXD
12 NC_PP_VDD_BOOST
12 UART_AP_TO_WLAN_TXD
12 UART_AP_TO_WLAN_RTS_L
12 UART_WLAN_TO_AP_RXD
12 UART_WLAN_TO_AP_CTS_L
12 11 9 6 4 PP1V8_S2
PP1V8_S2 4 6 9 11 12
PP_VDD_MAIN 5 6 7 8 11 12
BB_TO_PMU_PCIE_HOST_WAKE_L 12
PMU_TO_BBPMU_RESET_L 12
PMU_AMUX_AY 5
AOP_TO_WLAN_CONTEXT_B 12
UART_BB_TO_AOP_RXD 12
UART_AOP_TO_BB_TXD 12
AOP_TO_WLAN_CONTEXT_A 12
BT_TO_PMU_HOST_WAKE 12
PMU_TO_BT_REG_ON 12
PMU_TO_WLAN_CLK32K 12
WLAN_TO_PMU_HOST_WAKE 12
PMU_TO_WLAN_REG_ON 12
PMU_AMUX_BY 5
CODEC_TO_SPKRAMP_BOT_ARC_MCLK 7
PMU_TO_BB_USB_VBUS_DETECT 12
PMU_HYDRA_TO_AP_FORCE_DFU 5
AP_TO_BT_WAKE 12
WLAN_TO_AP_TIME_SYNC 12
RADIO_PA_NTC 12
AP_TO_MANY_BSYNC 5 10 12
TOUCH_TO_AMUX_PP1V8 5 10
PP3V5_RACER 5 10
PP1V1_RACER 5 10
PP5V25_TOUCH_VDDH 5 10
RACER_TO_ACORN_ORB_SCAN 5 10
PP1V8_TOUCH_RACER_S2 5 10
I2C3_AP_SCL 5 10
I2C3_AP_SDA 5 10
TOUCH_TO_ACORN_PP5V25_EN 5 10
PN6V7_RACER 5 10
PMU_TO_TOUCH_CLK32K_RESET_L 5 10
PP10V0_RACER 5 10
AP_TO_RACER_RESET_L 5 10
RACER_TO_AOP_INT_L 5 10
SWD_AOP_TO_MANY_SWCLK 10 12
SWD_AOP_BI_RACER_SWDIO 10
UART_AOP_TO_RACER_TXD 5 10
UART_RACER_TO_AOP_RXD 5 10
HALL2_TO_AOP_IRQ_L 5 10
AP_TO_RACER_REF_CLK 10
SPI_AP_TO_RACER_CS_L 5 10
SPI_RACER_TO_AP_MISO 10
SPI_AP_TO_RACER_MOSI 5 10
SPI_AP_TO_RACER_SCLK 10
PP_BATT_VCC 5
PP3V0_S2 12
90_USB_BB_DATA_P 12
90_USB_BB_DATA_N 12
PP_VBUS2_IKTARA 6
IKTARA_COIL2 5 6
IKTARA_COIL1 5 6
AP_TO_BB_COREDUMP 12
PCIE_BB_BI_AP_CLKREQ_L 12
SPKRAMP_TOP_TO_COIL_OUT_POS 8
SPKRAMP_TOP_TO_COIL_OUT_NEG 8
COIL_TO_SPKRAMP_TOP_VSENSE_POS 8
COIL_TO_SPKRAMP_TOP_VSENSE_NEG 8
COIL_TO_SPKRAMP_BOT_VSENSE_POS 7
COIL_TO_SPKRAMP_BOT_VSENSE_NEG 7
SPKRAMP_BOT_TO_COIL_OUT_POS 7
SPKRAMP_BOT_TO_COIL_OUT_NEG 7
AP_TO_NFC_DEV_WAKE 12
UART_NFC_TO_AP_CTS_L 12
UART_AP_TO_NFC_TXD 12
UART_NFC_TO_AP_RXD 12
UART_AP_TO_NFC_RTS_L 12
AP_TO_NFC_FW_DWLD_REQ 12
NFC_TO_PMU_HOST_WAKE 12
PMU_TO_NFC_EN 12
NC
J_INT_TOP
INTERPOSER-TOP-D22
SMT-PAD
SYM 1 OF 3
GND
G1–G124 / IOG1–IOG124
J_INT_TOP
INTERPOSER-TOP-D22
SMT-PAD
SYM 2 OF 3
GND
G125–G248 / IOG125–IOG248

SYNC_MASTER=mlb_bot

SYNC_DATE=04/04/2017

PAGE TITLE

I/O: Interposer (Top)

Apple Inc.

DRAWING NUMBER	SIZE
051-02247	D

REVISION 7.0.0

BRANCH evt-1

PAGE 66 OF 80

SHEET 11 OF 34

NOTICE OF PROPRIETARY PROPERTY:

THE INFORMATION CONTAINED HEREIN IS THE PROPRIETARY PROPERTY OF APPLE INC.
THE POSESSOR AGREES TO THE FOLLOWING:

I TO MAINTAIN THIS DOCUMENT IN CONFIDENCE
II NOT TO REPRODUCE OR COPY IT
III NOT TO REVEAL OR PUBLISH IT IN WHOLE OR PART
IV ALL RIGHTS RESERVED

迅维职业技能培训中心
400-800-9990
4008009990 www.xinxunwei.com 迅维手机维修培训学校

SUBDESIGN_SUFFIX=W
90_PCIE_AP_TO_WLAN_REFCLK_P
90_PCIE_AP_TO_WLAN_REFCLK_N
90_PCIE_AP_TO_WLAN_TXD_P
90_PCIE_AP_TO_WLAN_TXD_N
90_PCIE_WLAN_TO_AP_RXD_P
90_PCIE_WLAN_TO_AP_RXD_N
PCIE_WLAN_BI_AP_CLKREQ_L
PCIE_AP_TO_WLAN_RESET_L
WLAN_TO_PMU_HOST_WAKE
AOP_TO_WLAN_CONTEXT_A
AOP_TO_WLAN_CONTEXT_B
AP_TO_BT_WAKE
AP_TO_WLAN_DEVICE_WAKE
PMU_TO_BT_REG_ON
PMU_TO_WLAN_CLK32K
PMU_TO_WLAN_REG_ON
UART_WLAN_TO_AP_CTS_L
UART_WLAN_TO_AP_RXD
UART_AP_TO_WLAN_RTS_L
UART_AP_TO_WLAN_TXD
WLAN_TO_AP_TIME_SYNC
WIFI_MLB
PP_VDD_MAIN
PP1V8_SDRAM
UART_BB_TO_WLAN_COEX
UART_WLAN_TO_BB_COEX
BT_TO_PMU_HOST_WAKE
UART_BT_TO_AP_CTS_L
UART_BT_TO_AP_RXD
UART_AP_TO_BT_RTS_L
UART_AP_TO_BT_TXD
50_LAT_WLAN_MLC
50_UAT_WLAN_5G_SOUTH
50_UAT_WLAN_2G_SOUTH
50_UAT_WLAN_2G_SOUTH
50_UAT_WLAN_5G_SOUTH
50_LAT_WLAN
PP1V8_S2
SUBDESIGN_SUFFIX=S
PMU_TO_NFC_EN
BB_TO_NFC_CLK
NFC_TO_BB_CLK_REQ
AP_TO_NFC_FW_DWLD_REQ
AP_TO_NFC_DEV_WAKE
NFC_TO_PMU_HOST_WAKE
NFC_DWP_TX_TP
NC
UART_AP_TO_NFC_TXD
UART_NFC_TO_AP_RXD
UART_AP_TO_NFC_RTS_L
UART_NFC_TO_AP_CTS_L
NFC_SWP1
nfc_mlb
NC_PP_VDD_BOOST
MAKE_BASE=TRUE
SUBDESIGN_SUFFIX=K
I63
PP3V0_S2
PP3V0_TRISTAR
AP_TO_BBPMU_RADIO_ON_L
AP_TO_BBPMU_SDWN_L
PMU_TO_BBPMU_RESET_L
PMU_TO_BBPMU_ON
AP_TO_BB_RESET_L
AP_TO_BB_MESA_ON
AP_TO_BB_COREDUMP
AP_TO_BB_COREDUMP_TRIG
AP_TO_BB_IPC_GPIO1
AP_TO_BB_IPC_GPIO
AP_TO_MANY_BSYNC
TOUCH_TO_BBPMU_FORCE_PWM
BB_TO_AP_RESET_DETECT_L
BB_TO_STROBE_DRIVER_GSM_BURST_IND
BB_TO_AP_GSM_TXBURST
90_PCIE_AP_TO_BB_REFCLK_P
90_PCIE_AP_TO_BB_REFCLK_N
90_PCIE_AP_TO_BB_TXD_P
90_PCIE_AP_TO_BB_TXD_N
90_PCIE_BB_TO_AP_RXD_P
90_PCIE_BB_TO_AP_RXD_N
PCIE_AP_TO_BB_RESET_L
PCIE_BB_BI_AP_CLKREQ_L
BB_TO_PMU_PCIE_HOST_WAKE_L
AP_TO_BB_DEVICE_WAKE
RADIO_MLB_KAROO
UART_AOP_TO_BB_TXD
UART_BB_TO_AOP_RXD
SWD_AOP_TO_MANY_SWCLK
SWD_AOP_BI_BB_SWDIO
PMU_TO_BB_USB_VBUS_DETECT
90_USB_BB_DATA_P
90_USB_BB_DATA_N
SWD_AP_TO_BB_CLK
SWD_AP_BI_BB_IO
USB_BB_VBUS
UART_AP_TO_BB_TXD
UART_BB_TO_AP_RXD
I2S_BB_TO_AP_BCLK
I2S_BB_TO_AP_LRCLK
I2S_AP_TO_BB_DOUT
I2S_BB_TO_AP_DIN
PMU_TO_GNSS_EN
UART_AP_TO_GNSS_TXD
UART_GNSS_TO_AP_RXD
UART_AP_TO_GNSS_RTS_L
UART_GNSS_TO_AP_CTS_L
AP_TO_BB_TIME_MARK
AP_TO_GNSS_WAKE
AP_TO_GNSS_TIME_MARK
AP_TO_GNSS_DEVICE_WAKE
SIM1_SWP
NFC_TO_BB_CLKREQ
RADIO PA NTC
C3043
100PF
5%
16V
NP0-C0G
01005
ROOM=PMU
I71
R3043
10KOHM-1%
01005
RADIO_PA_NTC
PA_NTC_RETURN
OMIT
XW3043
SHORT-20L-0.05MM-SM

SYNC_DATE=07/29/2016

PAGE TITLE

RADIOS

DRAWING NUMBER 051-02247

SIZE D

Apple Inc.

REVISION 7.0.0

BRANCH evt-1

PAGE 80 OF 80

SHEET 12 OF 34

NOTICE OF PROPRIETARY PROPERTY:

THE INFORMATION CONTAINED HEREIN IS THE PROPRIETARY PROPERTY OF APPLE INC. THE POSESSOR AGREES TO THE FOLLOWING:

I TO MAINTAIN THIS DOCUMENT IN CONFIDENCE
II NOT TO REPRODUCE OR COPY IT
III NOT TO REVEAL OR PUBLISH IT IN WHOLE OR PART
IV ALL RIGHTS RESERVED

1. ALL RESISTANCE VALUES ARE IN OHMS, 0.1 WATT +/- 5%.
2. ALL CAPACITANCE VALUES ARE IN MICROFARADS.
3. ALL CRYSTALS & OSCILLATOR VALUES ARE IN HERTZ.

REV	ECN	DESCRIPTION OF REVISION	CK APPD / DATE
7	0008448938	ENGINEERING RELEASED	2017-04-11

ICE17.2 RADIO_MLB

Tue Apr 11 16:10:08 2017

PDF PAGE	CSA PAGE	CONTENTS
2	2	BASEBAND
3	3	BASEBAND MEMORY/DEBUG
4	4	BASEBAND POWER
5	5	BASEBAND PMIC
6	6	TRANSCEIVERS
7	7	ET MODULATOR
8	8	TDD TRANSMIT
9	9	FDD TRANSMIT
10	10	PRIMARY RECEIVE
11	11	LOWER ANTENNA & COUPLERS
12	12	DIVERSITY RECEIVE ASM'S
13	13	DIVERSITY RECEIVE LNA'S
14	14	UPPER ANTENNA FEEDS
15	15	GNSS
16	16	TEST POINTS & SIM

ALTERNATES

PART NUMBER	ALTERNATE FOR PART NUMBER	REFERENCE DESIGNATOR(S)	DESCRIPTION	BOM OPTION
197S00040	197S00044	VTCXO_K	AVX VC-TCXO	?
197S00042	197S00044	VTCXO_K	NDK VC-TCXO	?
335S00013	335S0894	EPROM_K	ON SEMI EEPROM	?
138S0719	138S1103	C522_K	MURATA	?
138S00133	138S00128	C509_K, C523_K, C605_K, C624_K, C626_K, C1114_K, C1116_K	MURATA	?
138S00049	138S00032	C402_K, C433_K, C437_K, C510_K, C720_K	MURATA	?
138S0831	138S00032	C402_K, C433_K, C437_K, C510_K, C720_K	MURATA	?
138S00086	138S0884	C500_K, C501_K, C502_K, C514_K, C515_K	MURATA	?
339S00363	339S00353	GNSS_K	PILSNER STATS	?

BOM OPTIONS

PART#	QTY	DESCRIPTION	REFERENCE DESIGNATOR(S)	CRITICAL	BOM OPTION
998-05780	1	BASEBAND, UNFUSED	U_BB_K	CRITICAL	BB_UNFUSED
998-05781	1	BASEBAND, LOCAL FUSED	U_BB_K	CRITICAL	BB_LOCAL_FUSED
998-05782	1	BASEBAND, DEV FUSED	U_BB_K	CRITICAL	BB_DEV_FUSED
337S00244	1	BASEBAND, PRODUCTION FUSED	U_BB_K	CRITICAL	BB_PROD_FUSED
138S00159	7	CAP,SOFT-TERM,2.2uF,6.3V,0201,KYOCERA	C402_K,C437_K,C438_K,C433_K,C510_K,C720_K,C1601_K		SOFT_CAP
138S0831	7	CAP,TYPICAL,2.2UF,6.3V,0201,MURATA	C402_K,C437_K,C438_K,C433_K,C510_K,C720_K,C1601_K		TYPICAL_CAP

RADIO_MLB PORTS

POWER

28 27 20 19 18 17 12 IN PP_VDD_MAIN
28 27 26 23 18 17 16 15 14 12 29 IN PP1V8_S2
29 12 IN PP3V0_S2

CLOCKS

PMU_TO_BB_GNSS_32K

BB CONTROL

28 17 14 12 IN AP_TO_BBPMU_RADIO_ON_L
28 17 12 IN PMU_TO_BBPMU_RESET_L
28 15 12 IN AP_TO_BB_RESET_L

14 12 OUT BB_TO_AP_RESET_DETECT_L
28 14 12 OUT BB_TO_STROBE_DRIVER_GSM_BURST_IND
28 14 IN AP_TO_BB_MESA_ON_K

14 12 IN AP_TO_BB_COREDUMP
28 17 12 IN AP_TO_MANY_BSYNC
14 12 IN AP_TO_BB_IPC_GPIO1

PCIE

28 14 12 IN 90_PCIE_AP_TO_BB_REFCLK_P
28 14 12 IN 90_PCIE_AP_TO_BB_REFCLK_N
28 14 12 IN 90_PCIE_AP_TO_BB_TXD_P
28 14 12 IN 90_PCIE_AP_TO_BB_TXD_N
28 14 12 OUT 90_PCIE_BB_TO_AP_RXD_P
28 14 12 OUT 90_PCIE_BB_TO_AP_RXD_N
28 14 12 IN PCIE_AP_TO_BB_RESET_L
16 2 IO PCIE_BB_BI_AP_CLKREQ_L
28 14 12 OUT BB_TO_PMU_PCIE_HOST_WAKE_L
AP_TO_BB_DEVICE_WAKE

UART

28 14 IN UART_AP_TO_BB_TXD_K
28 14 OUT UART_BB_TO_AP_RXD_K

AOP

14 12 IN UART_AOP_TO_BB_TXD
14 12 OUT UART_BB_TO_AOP_RXD

AUDIO

14 12 OUT I2S_BB_TO_AP_BCLK
14 12 OUT I2S_BB_TO_AP_LRCLK
14 12 IN I2S_AP_TO_BB_DOUT
14 12 OUT I2S_BB_TO_AP_DIN

WLAN

28 14 12 IN UART_BB_TO_WLAN_COEX
28 14 12 OUT UART_WLAN_TO_BB_COEX

NFC

16 IO NFC_SWP1

18 12 IN NFC_TO_BB_CLK_REQ
28 18 12 OUT BB_TO_NFC_CLK

GNSS

28 27 12 IN PMU_TO_GNSS_EN
28 27 12 IN UART_AP_TO_GNSS_TXD
28 27 12 OUT UART_GNSS_TO_AP_RXD
28 27 12 IN UART_AP_TO_GNSS_RTS_L
28 27 12 OUT UART_GNSS_TO_AP_CTS_L

28 27 12 IN AP_TO_BB_TIME_MARK
27 12 IN AP_TO_GNSS_WAKE

DEBUG

28 15 12 IN SWD_AOP_TO_MANY_SWCLK
16 3 IO SWD_AOP_BI_BB_SWDIO
28 14 12 IN PMU_TO_BB_USB_VBUS_DETECT
16 2 IO 90_USB_BB_DATA_P
16 2 IO 90_USB_BB_DATA_N

ANTENNA FEEDS

17 IO 50_LAT_WLAN
17 IO 50_UAT_WLAN_2G_SOUTH
17 IO 50_UAT_WLAN_5G_SOUTH

RADIO_MLB

DRAWING TITLE
SCH,MLB,BOT,X893

Apple Inc.

DRAWING NUMBER 051-02247
SIZE D
REV. 1.0.0
BRANCH evt-1
PAGE 1 OF 17
SHEET 13 OF 34

NOTICE OF PROPRIETARY PROPERTY:
THE INFORMATION CONTAINED HEREIN IS THE PROPRIETARY PROPERTY OF APPLE INC.
THE POSESSOR AGREES TO THE FOLLOWING:
I TO MAINTAIN THIS DOCUMENT IN CONFIDENCE
II NOT TO REPRODUCE OR COPY IT
III NOT TO REVEAL OR PUBLISH IT IN WHOLE OR PART
IV ALL RIGHTS RESERVED

CONFIDENTIAL AND PROPRIETARY APPLE SYSTEM DESIGN. FOR REFERENCE PURPOSE ONLY - NOT A CHANGE REQUEST

BASEBAND

PP1V8_S2
R200_K 100K 1% 1/32W MF 01005 BASEBAND
R208_K 100K 1% 1/32W MF 01005 BASEBAND
PCIE_BB_BI_AP_CLKREQ_L
AP_TO_BBPMU_RADIO_ON_L
R201_K 100K 1% 1/32W MF 01005 BASEBAND
SIM1_DETECT_K
VDD_SIM1_K
R202_K 4.7K 5% 1/32W MF 01005
SIM1_IO_K
R207_K 1.00K 1% 1/32W MF 01005 BASEBAND
R209_K 1.00K 1% 1/32W MF 01005 BASEBAND
I2C_BBPMU_SCL_K
I2C_BBPMU_SDA_K
U_BB_K PMB9948 BGA SYM 1 OF 9 OMIT_TABLE
SIM1_CLK_K G18 CC1_CLK FS
SIM1_IO_K F19 CC1_IO FS
SIM1_RST_K F18 CC1_RST FS
SIM CARD 1
NC H18 CC2_IN FS
NC H19 CC2_CLK FS
NC G19 CC2_IO FS
NC H20 CC2_RST FS
SIM CARD 2
UART_BB_TO_AP_RXD_K J20 USIF1_TXD_MTSR
UART_AP_TO_BB_TXD_K J18 USIF1_RXD_MRST FS
NC K20 USIF1_RTS*
EINT4 K19 USIF1_CTS* FS
USIF1
UART_BB_TO_AOP_RXD E19 USIF3_TXD_MTSR
UART_AOP_TO_BB_TXD E18 USIF3_RXD_MRST FS
DEV_HW_CONFIG_K D18 USIF3_RTS*
EINT6 NC D19 USIF3_CTS* FS
USIF3
EINT5 AP_TO_BB_IPC_GPIO1 Y7 USIF2_TXD_MTSR
NC Y6 USIF2_RXD_MRST
NC Y5 USIF2_RTS*
NC AA7 USIF2_CTS*
USIF2
EXTRA I/OS
NC J17 CLKOUT1
EINT7 NC U7 MMC1_CD*
BB_TO_AP_RESET_DETECT_L V9 MMC1_CLK
BB_DEBUG_ERROR_K W7 MMC1_CMD
BB_HW_ID<0>_K U9 MMC1_DAT_0
BB_HW_ID<1>_K V7 MMC1_DAT_1
BB_HW_ID<2>_K V8 MMC1_DAT_2
BB_HW_ID<3>_K U8 MMC1_DAT_3
MMC/SDIO1
EINT0 BBPMU_ALERT_L_K C15 EINT0
CC1_IN SIM1_DETECT_K K18 EINT1 FS
BB_TO_PMU_PCIE_HOST_WAKE_L M20 EINT2 BOOTROM DRIVEN
NC L18 EINT3 FS
EXT INTERRUPT
I2S2 FS I2S2_CLK0 W2 I2S_BB_TO_AP_BCLK
I2S2_CLK1 AA4 AP_TO_BB_MESA_ON_K EINT3
I2S2_RX Y3 I2S_AP_TO_BB_DOUT
I2S2_TX W3 I2S_BB_TO_AP_DIN
I2S2_WA0 Y4 I2S_BB_TO_AP_LRCLK
FS I2S2_WA1 W4 AP_TO_BB_COREDUMP EINT2
THERM_SNS_A T18 NC
THERM_SNS_C T19 NC
I2C1 I2C1_SCL L19 I2C_BB_EEPROM_SCL_K
I2C1_SDA L20 I2C_BB_EEPROM_SDA_K
I2C2 I2C2_SCL B16 I2C_BBPMU_SCL_K
I2C2_SDA A15 I2C_BBPMU_SDA_K
USB 3.0 USB_DPLUS Y1 90_USB_BB_DATA_P
USB_DMINUS AA1 90_USB_BB_DATA_N
VBUS W1 PMU_TO_BB_USB_VBUS_DETECT
USB_TUNE AA3 USB_BB_TUNE_K
USB_TEST Y2 NC
USB30_TXP AB2 NC
USB30_TXN AB1 NC
USB30_RXP AC1 NC
USB30_RXN AC2 NC
R205_K 200 1% 1/32W MF 01005 BASEBAND
PCIE PCI_PET_P1 AE16 90_PCIE_BB_TO_AP_RXD_P
PCI_PET_N1 AE15 90_PCIE_BB_TO_AP_RXD_N
PCI_PER_P1 AE13 90_PCIE_AP_TO_BB_TXD_P
PCI_PER_N1 AE14 90_PCIE_AP_TO_BB_TXD_N
PCI_REFCLK_P AC15 90_PCIE_AP_TO_BB_REFCLK_P
PCI_REFCLK_N AC14 90_PCIE_AP_TO_BB_REFCLK_N
PCI_REF_RES AA15 PCIE_REF_RES_K
R206_K 200 1% 1/32W MF 01005 BASEBAND
BASEBAND
U_BB_K PMB9948 BGA SYM 7 OF 9 OMIT_TABLE
SYSCLK_26MHZ_K U5 SYS_CLK
SYSCLK_26MHZ_EN_K V6 SYS_CLK_EN
CLOCKS AND CONTROL
DIGRF V4.0 MAIN
RXDAT_MAIN_0_1- D1 90_DIGRF_M0_RX1_N_K
RXDAT_MAIN_0_1+ D2 90_DIGRF_M0_RX1_P_K
RXDAT_MAIN_0_2- C2 90_DIGRF_M0_RX2_N_K
RXDAT_MAIN_0_2+ C3 90_DIGRF_M0_RX2_P_K
RXDAT_MAIN_1_1- M1 90_DIGRF_M1_RX1_N_K
RXDAT_MAIN_1_1+ M2 90_DIGRF_M1_RX1_P_K
RXDAT_MAIN_1_2- L1 90_DIGRF_M1_RX2_N_K
RXDAT_MAIN_1_2+ L2 90_DIGRF_M1_RX2_P_K
TXDAT_MAIN_0_1- E1 90_DIGRF_M0_TX_N_K
TXDAT_MAIN_0_1+ E2 90_DIGRF_M0_TX_P_K
TXDAT_MAIN_1_1- N1 90_DIGRF_M1_TX_N_K
TXDAT_MAIN_1_1+ N2 90_DIGRF_M1_TX_P_K
MPHY_MAIN_0_EN A3 DIGRF_M0_EN_K
MPHY_MAIN_1_EN K4 DIGRF_M1_EN_K
DIGRF V4.0 AUX
RXDAT_AUX_0_1- H2 90_DIGRF_A0_RX1_N_K
RXDAT_AUX_0_1+ H1 90_DIGRF_A0_RX1_P_K
RXDAT_AUX_0_2- J1 90_DIGRF_A0_RX2_N_K
RXDAT_AUX_0_2+ J2 90_DIGRF_A0_RX2_P_K
RXDAT_AUX_1_1- T1 90_DIGRF_A1_RX1_N_K
RXDAT_AUX_1_1+ T2 90_DIGRF_A1_RX1_P_K
RXDAT_AUX_1_2- U1 90_DIGRF_A1_RX2_N_K
RXDAT_AUX_1_2+ U2 90_DIGRF_A1_RX2_P_K
TXDAT_AUX_0_1- G2 90_DIGRF_A0_TX_N_K
TXDAT_AUX_0_1+ G1 90_DIGRF_A0_TX_P_K
TXDAT_AUX_1_1- R1 90_DIGRF_A1_TX_N_K
TXDAT_AUX_1_1+ R2 90_DIGRF_A1_TX_P_K
MPHY_AUX_0_EN J4 DIGRF_A0_EN_K
MPHY_AUX_1_EN T4 DIGRF_A1_EN_K
BASEBAND
U_BB_K PMB9948 BGA SYM 9 OF 9 OMIT_TABLE
BBPMU_STBY_K C16 MODEM_STDBY
BB_TO_STROBE_DRIVER_GSM_BURST_IND F17 FTA_TRIG
GNSS_BLANK_K F17 IDC_PA_BLANKING
UART_WLAN_TO_BB_COEX E16 IDC_UART_RXD FS
UART_BB_TO_WLAN_COEX F16 IDC_UART_TXD FS
AP_TO_BBPMU_RADIO_ON_L D15 SDWN_REQ* FS
BBPMU_VCLK_K B13 VCLK
BBPMU_VDIO_K C14 VDIO
FS PCIE_CLKREQ* N18 PCIE_BB_BI_AP_CLKREQ_L
PCIE_PERST* P18 PCIE_AP_TO_BB_RESET_L
PERST PULLED DOWN AT AP
C201_K 100PF 5% 16V NP0-C0G 01005 BASEBAND
BASEBAND
OUT
IN
BI

BB EEPROM

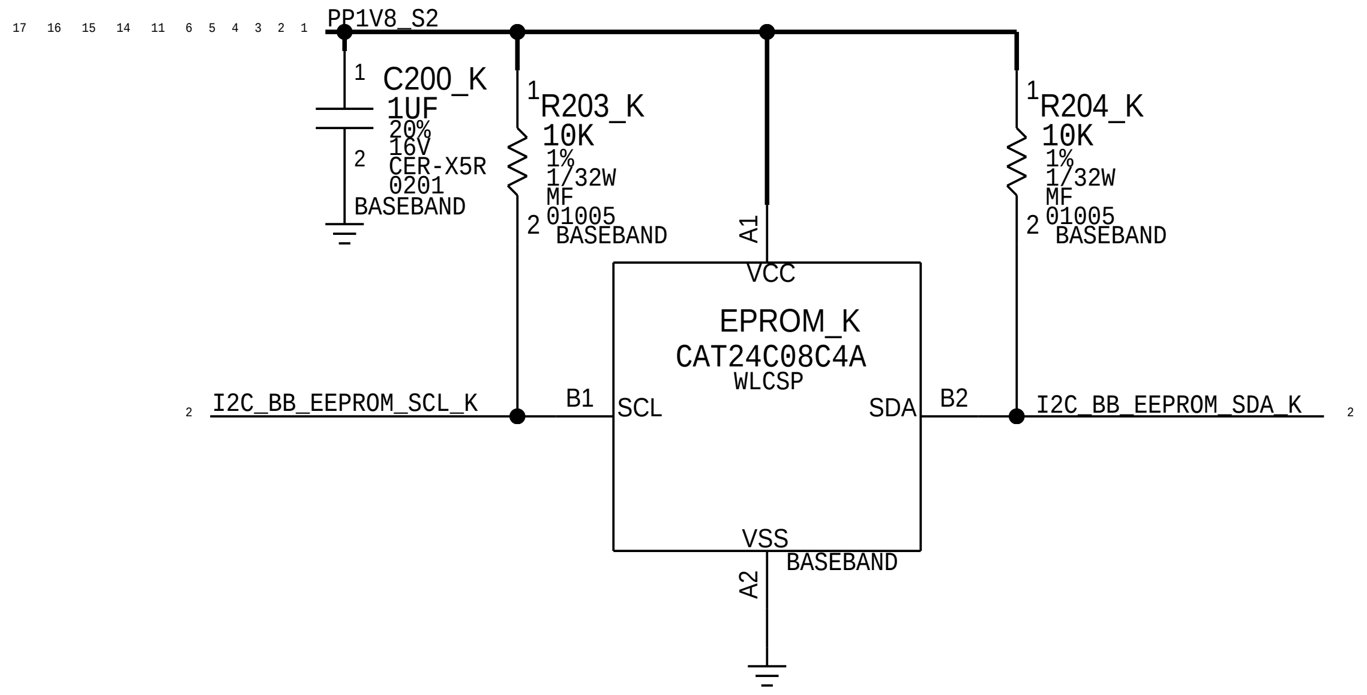
PP1V8_S2
C200_K 1UF 20% 10V CER-X5R 0201 BASEBAND
R203_K 10K 1% 1/32W MF 01005 BASEBAND
R204_K 10K 1% 1/32W MF 01005 BASEBAND
A1 VCC
EPROM_K CAT24C08C4A WLCSP
I2C_BB_EEPROM_SCL_K B1 SCL
SDA B2 I2C_BB_EEPROM_SDA_K
VSS A2 BASEBAND

CONFIDENTIAL AND PROPRIETARY APPLE SYSTEM DESIGN. FOR REFERENCE PURPOSE ONLY - NOT A CHANGE REQUEST

PAGE TITLE
BASEBAND

DRAWING NUMBER 051-02247
SIZE D

Apple Inc.

NOTICE OF PROPRIETARY PROPERTY:

THE INFORMATION CONTAINED HEREIN IS THE PROPRIETARY PROPERTY OF APPLE INC. THE POSESSOR AGREES TO THE FOLLOWING:

I TO MAINTAIN THIS DOCUMENT IN CONFIDENCE
II NOT TO REPRODUCE OR COPY IT
III NOT TO REVEAL OR PUBLISH IT IN WHOLE OR PART
IV ALL RIGHTS RESERVED

REVISION ?.0.0

BRANCH evt-1

PAGE 2 OF 17

SHEET 14 OF 34

迅维职业技能培训中心
400-800-9990

BASEBAND MEMORY/DEBUG

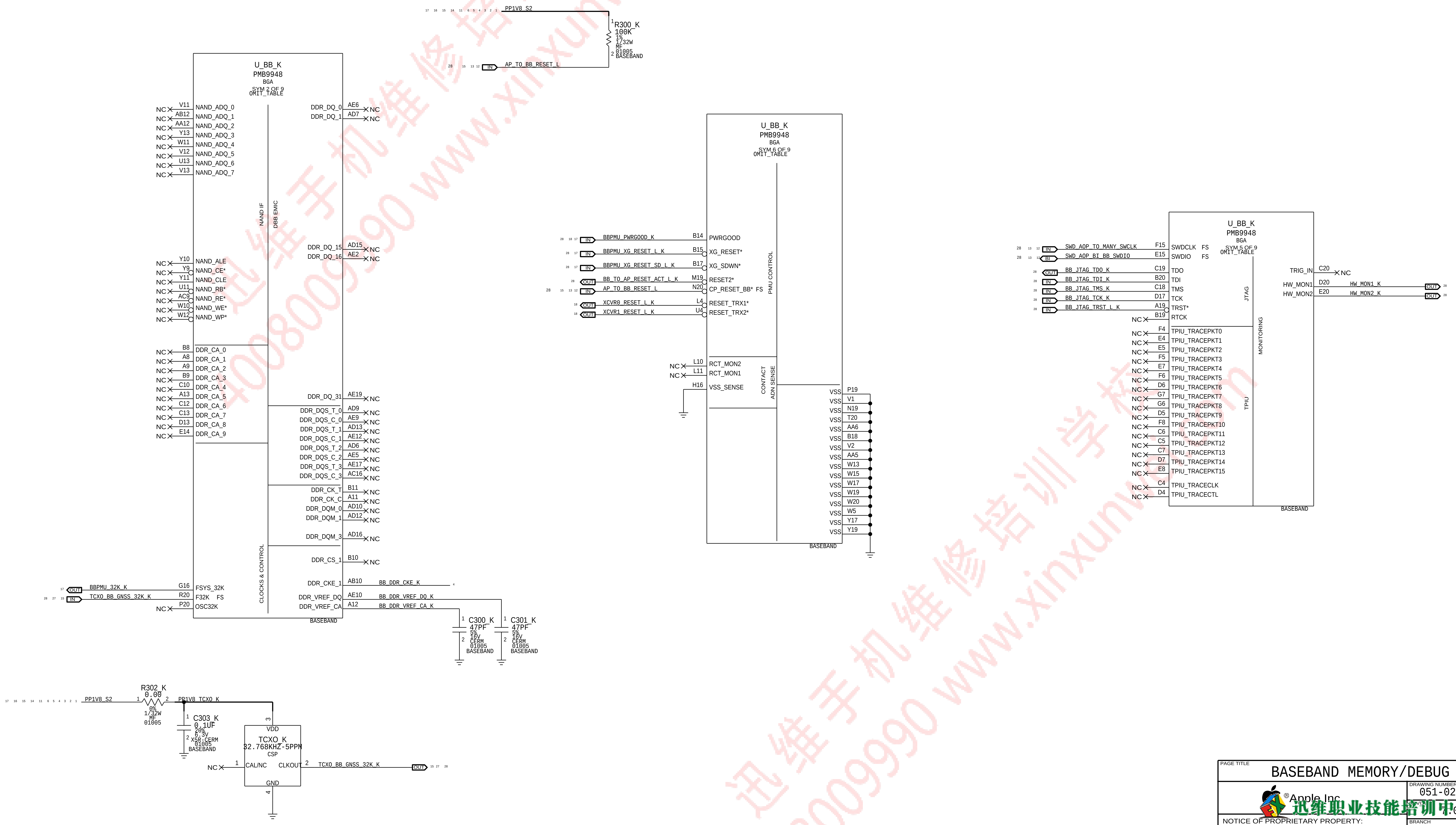

U_BB_K
PMB9948
BGA
SYM 2 OF 9
OMIT_TABLE
NAND_ADQ_0
NAND_ADQ_1
NAND_ADQ_2
NAND_ADQ_3
NAND_ADQ_4
NAND_ADQ_5
NAND_ADQ_6
NAND_ADQ_7
NAND_ALE
NAND_CE*
NAND_CLE
NAND_RB*
NAND_RE*
NAND_WE*
NAND_WP*
DDR_CA_0
DDR_CA_1
DDR_CA_2
DDR_CA_3
DDR_CA_4
DDR_CA_5
DDR_CA_6
DDR_CA_7
DDR_CA_8
DDR_CA_9
NAND IF
DBB EMIC
CLOCKS & CONTROL
DDR_DQ_0
DDR_DQ_1
DDR_DQ_15
DDR_DQ_16
DDR_DQ_31
DDR_DQS_T_0
DDR_DQS_C_0
DDR_DQS_T_1
DDR_DQS_C_1
DDR_DQS_T_2
DDR_DQS_C_2
DDR_DQS_T_3
DDR_DQS_C_3
DDR_CK_T
DDR_CK_C
DDR_DQM_0
DDR_DQM_1
DDR_DQM_3
DDR_CS_1
DDR_CKE_1
DDR_VREF_DQ
DDR_VREF_CA
FSYS_32K
F32K FS
OSC32K
BBPMU_32K_K
TCXO_BB_GNSS_32K_K
BB_DDR_CKE_K
BB_DDR_VREF_DQ_K
BB_DDR_VREF_CA_K
NC
OUT
IN
BASEBAND
C300_K
47PF
5%
16V
CERM
01005
BASEBAND
C301_K
47PF
5%
16V
CERM
01005
BASEBAND
PP1V8_S2
R300_K
100K
1%
1/32W
MF
01005
BASEBAND
AP_TO_BB_RESET_L
U_BB_K
PMB9948
BGA
SYM 6 OF 9
OMIT_TABLE
BBPMU_PWRGOOD_K
BBPMU_XG_RESET_L_K
BBPMU_XG_RESET_SD_L_K
BB_TO_AP_RESET_ACT_L_K
AP_TO_BB_RESET_L
XCVR0_RESET_L_K
XCVR1_RESET_L_K
PWRGOOD
XG_RESET*
XG_SDWN*
RESET2*
CP_RESET_BB* FS
RESET_TRX1*
RESET_TRX2*
PMU CONTROL
RCT_MON2
RCT_MON1
VSS_SENSE
CONTACT
ADN SENSE
VSS
BASEBAND
U_BB_K
PMB9948
BGA
SYM 5 OF 9
OMIT_TABLE
SWD_AOP_TO_MANY_SWCLK
SWD_AOP_BI_BB_SWDIO
BB_JTAG_TDO_K
BB_JTAG_TDI_K
BB_JTAG_TMS_K
BB_JTAG_TCK_K
BB_JTAG_TRST_L_K
SWDCLK FS
SWDIO FS
TDO
TDI
TMS
TCK
TRST*
RTCK
JTAG
MONITORING
TPIU
TPIU_TRACEPKT0
TPIU_TRACEPKT1
TPIU_TRACEPKT2
TPIU_TRACEPKT3
TPIU_TRACEPKT4
TPIU_TRACEPKT5
TPIU_TRACEPKT6
TPIU_TRACEPKT7
TPIU_TRACEPKT8
TPIU_TRACEPKT9
TPIU_TRACEPKT10
TPIU_TRACEPKT11
TPIU_TRACEPKT12
TPIU_TRACEPKT13
TPIU_TRACEPKT14
TPIU_TRACEPKT15
TPIU_TRACECLK
TPIU_TRACECTL
TRIG_IN
HW_MON1
HW_MON2
HW_MON1_K
HW_MON2_K
BI
BASEBAND
PP1V8_S2
R302_K
0.00
0%
1/32W
MF
01005
PP1V8_TCXO_K
C303_K
0.1UF
20%
6.3V
X5R-CERM
01005
BASEBAND
TCXO_K
32.768KHZ-5PPM
CSP
VDD
CAL/NC
CLKOUT
GND
TCXO_BB_GNSS_32K_K

CONFIDENTIAL AND PROPRIETARY APPLE SYSTEM DESIGN. FOR REFERENCE PURPOSE ONLY - NOT A CHANGE REQUEST

PAGE TITLE
BASEBAND MEMORY/DEBUG

DRAWING NUMBER 051-02247
SIZE D

Apple Inc.

NOTICE OF PROPRIETARY PROPERTY:

THE INFORMATION CONTAINED HEREIN IS THE PROPRIETARY PROPERTY OF APPLE INC. THE POSESSOR AGREES TO THE FOLLOWING:
I TO MAINTAIN THIS DOCUMENT IN CONFIDENCE
II NOT TO REPRODUCE OR COPY IT
III NOT TO REVEAL OR PUBLISH IT IN WHOLE OR PART
IV ALL RIGHTS RESERVED

BRANCH evt-1
PAGE 3 OF 17
SHEET 15 OF 34

BASEBAND POWER

U_BB_K
PMB9948
BGA
SYM 4 OF 9
DBB POWER PINS
OMIT_TABLE
VDD_CORE_1V0_K
VDD_CORE_MAIN
VDD_CORE_3G
VDD_CORE_LTE
VDD_CORE_DSP
VDD_CORE_TD
VDD_LDO_PLL
LDO_MON_PLL
VDD_RTC
VDD_SIM1
VDD_SIM2
VDD_IO18
VREF_0V6
VDD_LDO_CORE_EMIC
LDO_MON_EMIC
VDD_EMIC_IO_0
VDD_EMIC_IO_1
VDD_EMIC_IO_2
VDD_EMIC_IO_3
VDD_EMIC_IO_CA
VDD_EMIC_1V8_IO
VDD_LDO_DLL_EMIC
VDD_LDO_USB_SS
LDO_MON_USB_SS
VDD_USB_SS_IO
VDD_LDO_DIGRF_PHY1
LDO_MON_DIGRF1
VDD_LDO_DIGRF_PHY2
LDO_MON_DIGRF2
VDD_LDO_DIGRF_PHY3
LDO_MON_DIGRF3
VDD_LDO_DIGRF_PHY4
LDO_MON_DIGRF4
VDD_LDO_PCIE
LDO_MON_PCIE
VDD_PCIE_1V8
VPP
DUMMY_BALL
NC
VDD_IO_1V2_K
VDD_DDR_1V8_K
VDD_USB_3V15_K
PP1V8_S2
VDD_SIM1_K
VDD_SIM2_K
VDD_VREFCP_K
VREF_0V6_K
C413_K 1UF
C418_K 0.1UF
C414_K 1UF
C419_K 0.1UF
C415_K 1UF
C420_K 0.1UF
C416_K 1UF
C421_K 1UF
C411_K 1UF
C412_K 0.1UF
C400_K 0.470UF
C441_K 0.470UF
C417_K 0.1UF
C422_K 0.1UF
C401_K 0.01UF
C423_K 1UF
R401_K 10K 1% 1/32W MF 01005 BASEBAND
C424_K 0.1UF
C427_K 0.1UF
C429_K 0.1UF
C431_K 0.1UF
C434_K 0.1UF
C436_K 1UF
C440_K 0.1UF
C407_K 0.22UF
C435_K 0.1UF
C425_K 1UF
C428_K 0.1UF
C430_K 0.1UF
C432_K 0.1UF
C426_K 0.1UF
20% 6.3V X5R-CERM 01005 BASEBAND
10% 16V CER-X5R 0201
BASEBAND
U_BB_K
PMB9948
BGA
SYM 8 OF 9
LPDDR2 RAM
OMIT_TABLE
BB_DDR_CKE_K
ZQ_MEM_K
CKE_MEM
ZQ_MEM
R400_K 240 1% 1/32W MF 01005 BASEBAND
VDD1_MEM
VDD2_MEM
VDDQ_MEM
VSS_EMIC
VSSQ_MEM
C402_K 2.2UF
C403_K 0.1UF
C404_K 0.1UF
C405_K 0.1UF
C437_K 2.2UF
C438_K 2.2UF
C409_K 0.1UF
C410_K 0.1UF
C433_K 2.2UF
C406_K 0.1UF
C408_K 0.1UF
C439_K 0.1UF
OMIT_TABLE
U_BB_K
PMB9948
BGA
SYM 3 OF 9
GROUND
OMIT_TABLE
VSS
VSS_USB
VSS_PLL
VSS_MPHY_1
VSS_MPHY_2
VSS_MPHY_3
VSS_MPHY_4
VSS_PCIE_TX
BASEBAND
8
7
6
5
4
3
2
1
D
C
B
A

PAGE TITLE

BASEBAND POWER

DRAWING NUMBER 051-02247

SIZE D

Apple Inc.

REVISION 4.0.0

NOTICE OF PROPRIETARY PROPERTY:

THE INFORMATION CONTAINED HEREIN IS THE PROPRIETARY PROPERTY OF APPLE INC. THE POSESSOR AGREES TO THE FOLLOWING:
I TO MAINTAIN THIS DOCUMENT IN CONFIDENCE
II NOT TO REPRODUCE OR COPY IT
III NOT TO REVEAL OR PUBLISH IT IN WHOLE OR PART
IV ALL RIGHTS RESERVED

BRANCH evt-1

PAGE 4 OF 17

SHEET 16 OF 34

CONFIDENTIAL AND PROPRIETARY APPLE SYSTEM DESIGN. FOR REFERENCE PURPOSE ONLY - NOT A CHANGE REQUEST

迅维手机维修培训 www.xinyuwei.com 4008009990
迅维职业技能培训中心 400-800-9990

BASEBAND PMIC

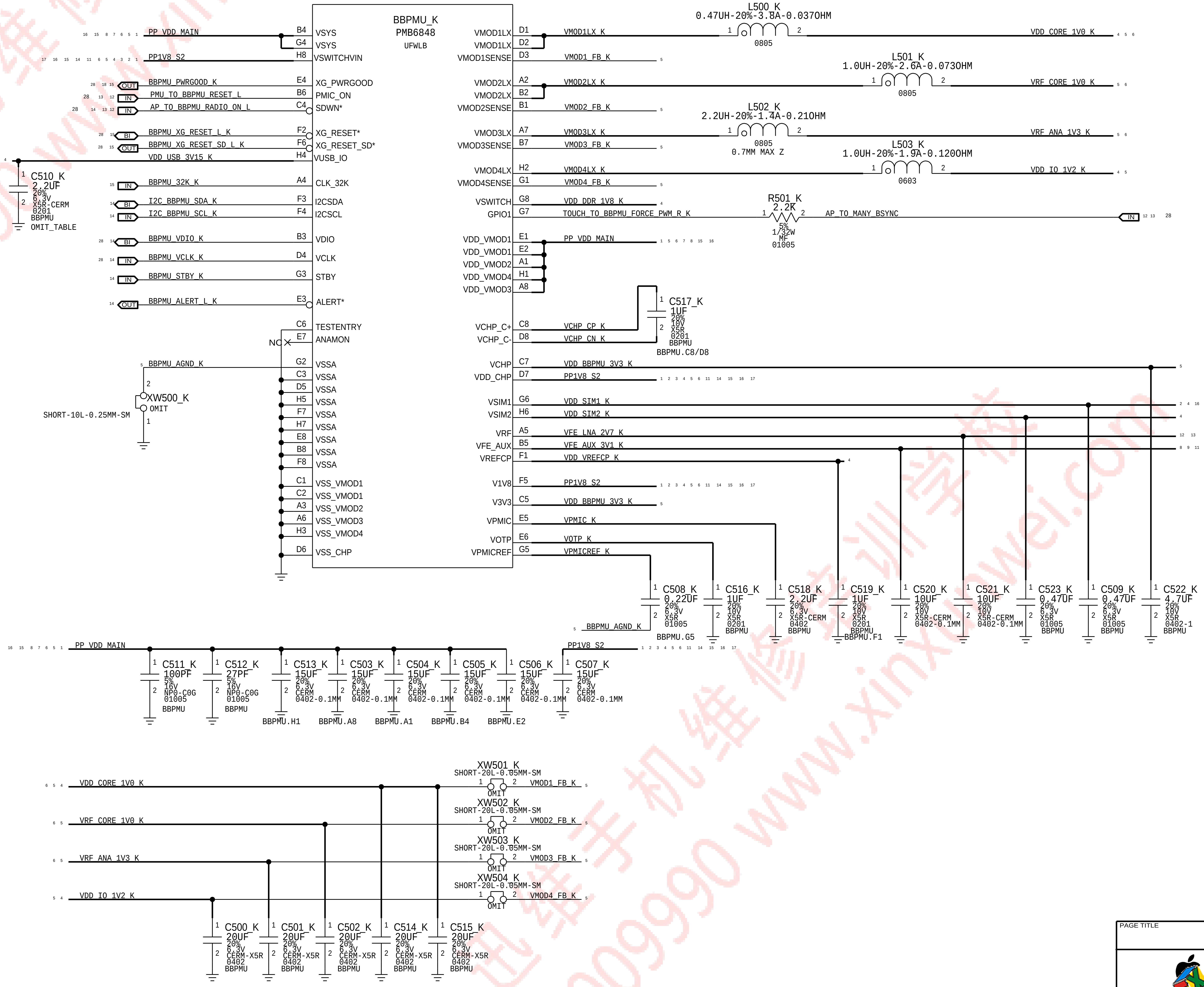
BBPMU_K
PMB6848
UFWLB
PP_VDD_MAIN
PP1V8_S2
BBPMU_PWRGOOD_K
PMU_TO_BBPMU_RESET_L
AP_TO_BBPMU_RADIO_ON_L
BBPMU_XG_RESET_L_K
BBPMU_XG_RESET_SD_L_K
VDD_USB_3V15_K
BBPMU_32K_K
I2C_BBPMU_SDA_K
I2C_BBPMU_SCL_K
BBPMU_VDIO_K
BBPMU_VCLK_K
BBPMU_STBY_K
BBPMU_ALERT_L_K
BBPMU_AGND_K
VSYS
VSWITCHVIN
XG_PWRGOOD
PMIC_ON
SDWN*
XG_RESET*
XG_RESET_SD*
VUSB_IO
CLK_32K
I2CSDA
I2CSCL
VDIO
VCLK
STBY
ALERT*
TESTENTRY
ANAMON
VSSA
VSS_VMOD1
VSS_VMOD2
VSS_VMOD3
VSS_VMOD4
VSS_CHP
VMOD1LX
VMOD1SENSE
VMOD2LX
VMOD2SENSE
VMOD3LX
VMOD3SENSE
VMOD4LX
VMOD4SENSE
VSWITCH
GPIO1
VDD_VMOD1
VDD_VMOD2
VDD_VMOD4
VDD_VMOD3
VCHP_C+
VCHP_C-
VCHP
VDD_CHP
VSIM1
VSIM2
VRF
VFE_AUX
VREFCP
V1V8
V3V3
VPMIC
VOTP
VPMICREF
L500_K
0.47UH-20%-3.8A-0.037OHM
0805
VDD_CORE_1V0_K
L501_K
1.0UH-20%-2.6A-0.073OHM
VRF_CORE_1V0_K
L502_K
2.2UH-20%-1.4A-0.21OHM
0.7MM MAX Z
VRF_ANA_1V3_K
L503_K
1.0UH-20%-1.9A-0.120OHM
0603
VDD_IO_1V2_K
R501_K
2.2K
5%
1/32W
MF
01005
TOUCH_TO_BBPMU_FORCE_PWM_R_K
AP_TO_MANY_BSYNC
VDD_DDR_1V8_K
VCHP_CP_K
VCHP_CN_K
C517_K
1UF
BBPMU.C8/D8
VDD_BBPMU_3V3_K
VDD_SIM1_K
VDD_SIM2_K
VFE_LNA_2V7_K
VFE_AUX_3V1_K
VDD_VREFCP_K
VPMIC_K
VOTP_K
VPMICREF_K
C510_K
2.2UF
X5R-CERM
OMIT_TABLE
XW500_K
OMIT
SHORT-10L-0.25MM-SM
NC
C508_K 0.22UF
C516_K 1UF
C518_K 2.2UF
C519_K 1UF
C520_K 10UF
C521_K 10UF
C523_K 0.47UF
C509_K 0.47UF
C522_K 4.7UF
BBPMU.G5
BBPMU.F1
C511_K 100PF
C512_K 27PF
C513_K 15UF
C503_K 15UF
C504_K 15UF
C505_K 15UF
C506_K 15UF
C507_K 15UF
BBPMU.H1
BBPMU.A8
BBPMU.A1
BBPMU.B4
BBPMU.E2
XW501_K
XW502_K
XW503_K
XW504_K
SHORT-20L-0.05MM-SM
VMOD1_FB_K
VMOD2_FB_K
VMOD3_FB_K
VMOD4_FB_K
C500_K 20UF
C501_K 20UF
C502_K 20UF
C514_K 20UF
C515_K 20UF
CERM-X5R
0402
BBPMU

CONFIDENTIAL AND PROPRIETARY APPLE SYSTEM DESIGN. FOR REFERENCE PURPOSE ONLY - NOT A CHANGE REQUEST

PAGE TITLE
BASEBAND PMIC

Apple Inc.

DRAWING NUMBER	SIZE
051-02247	D
REVISION 7.0.0	
BRANCH evt-1	
PAGE 5 OF 17	
SHEET 17 OF 34	

NOTICE OF PROPRIETARY PROPERTY:

THE INFORMATION CONTAINED HEREIN IS THE PROPRIETARY PROPERTY OF APPLE INC.
THE POSESSOR AGREES TO THE FOLLOWING:
I TO MAINTAIN THIS DOCUMENT IN CONFIDENCE
II NOT TO REPRODUCE OR COPY IT
III NOT TO REVEAL OR PUBLISH IT IN WHOLE OR PART
IV ALL RIGHTS RESERVED

TRANSCEIVERS

LAYOUT: TRACE SHOULD B1 ~1NH/1MM
XW600_K
SHORT-10L-0.25MM-SM
OMIT
VRE_ANA_1V3_K
VDD_XCVR0_1V3_K
C645_K 0.1UF
C604_K 15UF
C609_K 0.1UF
C613_K 0.1UF
C614_K 0.1UF
C615_K 0.1UF
C616_K 0.1UF
C617_K 0.1UF
C619_K 0.1UF
C620_K 0.22UF
R615_K 0.00
VRF_ANA_1V3_K
VDD_XCVR1_1V3_K
C5945_K 27PF
C623_K 15UF
C628_K 0.1UF
C632_K 0.1UF
C633_K 0.1UF
C634_K 0.1UF
C635_K 0.1UF
C636_K 0.1UF
C637_K 0.1UF
C638_K 0.22UF
XCVR0_K
PMB5757
UFWLB
SYM 1 OF 5
SMARTI6T
XCVR1_K
PMB5757
UFWLB
SYM 1 OF 5
SMARTI6T
LAYOUT: MAX DCR 85MOHM
R614_K 0.00
VRF_CORE_1V0_K
VRF_XCVR0_1V0_K
C605_K 0.47UF
C610_K 0.1UF
FL601_K
600-OHM-25%-0.1A
PP1V8_S2
VDD_XCVR0_1V8_K
C606_K 15UF
C612_K 0.1UF
R604_K 0.00
PP_VDD_MAIN
VDD_XCVR0_BAT_K
C602_K 100PF
C603_K 27PF
C607_K 0.47UF
C611_K 0.1UF
R616_K 0.00
VRF_XCVR1_1V0_K
C624_K 0.47UF
C629_K 0.1UF
FL600_K
600-OHM-25%-0.1A
VDD_XCVR1_1V8_K
C625_K 15UF
C630_K 0.1UF
R607_K 0.00
VDD_XCVR1_BAT_K
C621_K 100PF
C622_K 27PF
C626_K 0.47UF
C631_K 0.1UF
VDD0V68_RET
VDD1V3_MPHY
VDD1V3_CI
VDD1V3_TXPLL
VDD1V3_RX1PLL
VDD1V3_RX2PLL
VDD1V3_RXMS
VDD1V3_TXDIG
VDD1V3_TXRF
VDD1V3_RX2DCO
VDD1V3_RX1DCO
VDD1V3_TXDCO
VDD1V3_RXRF
VDD1V3_TXMS
VDD1V0_DIG
VDD1V8_CI
VDD1V8_RX
VDD1V8_TX
VDD_BAT
CEXT_RX2PLL
CEXT_TXPLL
CEXT_RX1PLL
CEXT_TXMAG
CELL_CLK_EN
CELL_CLK
SYSCLK_26MHZ_EN_K
SYSCLK_26MHZ_K
C639_K 0.022UF
C640_K 0.022UF
C641_K 0.022UF
C608_K 1UF
C642_K 0.022UF
C643_K 0.022UF
C644_K 0.022UF
C627_K 1UF
FSYS_RF
FSYS_RF_EN_CLK_ON
FSYS_C
FSYS_C_EN
BB_TO_NFC_CLK
NFC_TO_BB_CLK_REQ
XCVR1_26MHZ_K
XCVR1_26MHZ_EN_K
GNSS_26MHZ_CLKOUT_K
GPO0 GPO1 GPO2 GPO3 GPO4 GPO5 GPO6
NC
XCVR0_TSYNC_OUT_K
XCVR0_TSYNC_IN_K
XCVR0_MSYNC_OUT_K
XCVR0_MSYNC_IN_K
XCVR1_RFE_GPO0_K
XCVR1_TSYNC_IN_K
XCVR1_TSYNC_OUT_K
XCVR1_MSYNC_IN_K
XCVR1_MSYNC_OUT_K
MPHY_EN
MPHY2_EN
RESET_MAIN*
RESET_TRX*
DIGRF_M0_EN_K
DIGRF_A0_EN_K
BBPMU_PWRGOOD_K
XCVR0_RESET_L_K
DIGRF_M1_EN_K
DIGRF_A1_EN_K
XCVR1_RESET_L_K
TMSC
TCKC
XCVR0_JTAG_TMS_K
XCVR0_JTAG_TCK_K
XCVR1_JTAG_TMS_K
XCVR1_JTAG_TCK_K
MI3 MI4
MPHY_RX1_DAT
MPHY_RX1_DATX
MPHY_RX2_DAT
MPHY_RX2_DATX
MPHY_TX_DAT
MPHY_TX_DATX
MPHY2_RX1_DAT
MPHY2_RX1_DATX
MPHY2_RX2_DAT
MPHY2_RX2_DATX
MPHY2_TX_DAT
MPHY2_TX_DATX
90_DIGRF_M0_RX1_P_K
90_DIGRF_M0_RX1_N_K
90_DIGRF_M0_RX2_P_K
90_DIGRF_M0_RX2_N_K
90_DIGRF_M0_TX_P_K
90_DIGRF_M0_TX_N_K
90_DIGRF_A0_RX1_P_K
90_DIGRF_A0_RX1_N_K
90_DIGRF_A0_RX2_P_K
90_DIGRF_A0_RX2_N_K
90_DIGRF_A0_TX_P_K
90_DIGRF_A0_TX_N_K
90_DIGRF_M1_RX1_P_K
90_DIGRF_M1_RX1_N_K
90_DIGRF_M1_RX2_P_K
90_DIGRF_M1_RX2_N_K
90_DIGRF_M1_TX_P_K
90_DIGRF_M1_TX_N_K
90_DIGRF_A1_RX1_P_K
90_DIGRF_A1_RX1_N_K
90_DIGRF_A1_RX2_P_K
90_DIGRF_A1_RX2_N_K
90_DIGRF_A1_TX_P_K
90_DIGRF_A1_TX_N_K
RFFE_SDATA
RFFE_SCLK
RFFE_VIO
RFFE2_SCLK
RFFE2_SDATA
RFFE1_DATA_K
RFFE1_CLK_K
VDD_RFFE_VIO_1V8_K
RFFE2_CLK_R_K
RFFE2_DATA_R_K
XO_SUP
AFCDAC
XO
XO_SUP_K
AFC_DAC_K
VCXO_26MHZ_K
XCVR1_26MHZ_K
XCVR0_K
PMB5757
UFWLB
SYM 5 OF 5
XCVR1_K
PMB5757
UFWLB
SYM 5 OF 5
VSS
XCVR
VCTCXO
VDD_XCVR1_1V8_K
VDD_XCVR0_1V8_K
R600_K 27K
R602_K 27K
R601_K 562K
R603_K 562K
XCVR0_JTAG_TMS_K
XCVR1_JTAG_TMS_K
XCVR0_JTAG_TCK_K
XCVR1_JTAG_TCK_K
R605_K 0.00
XO_SUP_R_K
C601_K 4700PF
VTCXO_K
26MHZ-6PPM-1.8V
1P6X1P2-SM
VCC
VCONT
OUT
GND
C600_K 0.022UF
R609_K 0.00
RFFE2_CLK_K
R610_K 0.00
RFFE2_DATA_K
NFC_TO_BB_CLK_REQ
R606_K 100K
NOTE: GNSS_CLK REQUESTED WITH AT@CMD
VDD_CORE_1V0_K
C649_K 0.1UF
C650_K 0.1UF

CONFIDENTIAL AND PROPRIETARY APPLE SYSTEM DESIGN. FOR REFERENCE PURPOSE ONLY - NOT A CHANGE REQUEST

PAGE TITLE
TRANSCEIVERS

Apple Inc.

DRAWING NUMBER 051-02247
SIZE D
REVISION 1.0.0
BRANCH evt-1
PAGE 6 OF 17
SHEET 18 OF 34

NOTICE OF PROPRIETARY PROPERTY:
THE INFORMATION CONTAINED HEREIN IS THE PROPRIETARY PROPERTY OF APPLE INC.
THE POSESSOR AGREES TO THE FOLLOWING:
I TO MAINTAIN THIS DOCUMENT IN CONFIDENCE
II NOT TO REPRODUCE OR COPY IT
III NOT TO REVEAL OR PUBLISH IT IN WHOLE OR PART
IV ALL RIGHTS RESERVED

ET MODULATOR

ALPES II MODULE

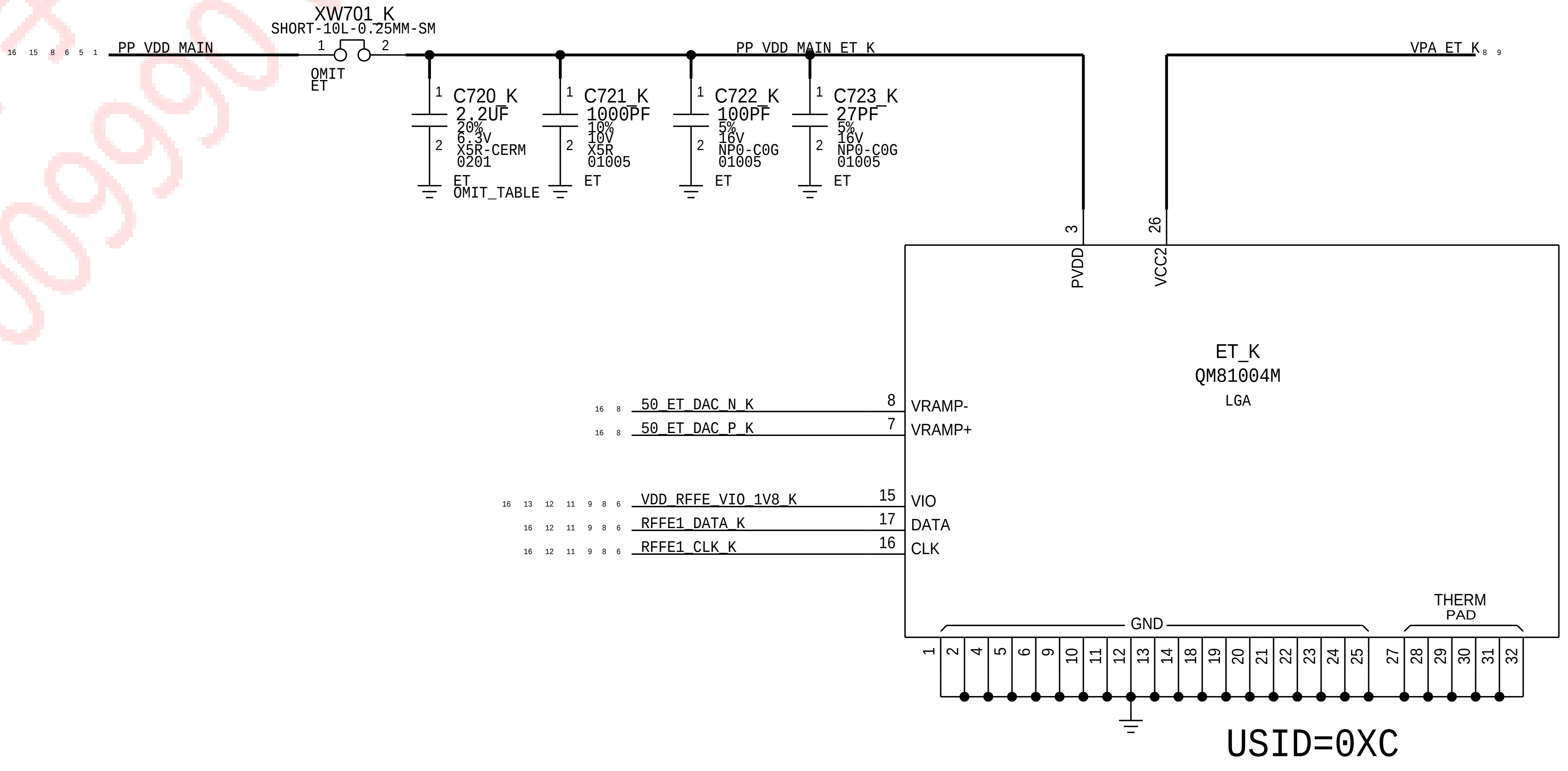
16 15 8 6 5 1
PP_VDD_MAIN
XW701_K
SHORT-10L-0.25MM-SM
1
2
OMIT
ET
PP_VDD_MAIN_ET_K
C720_K
2.2UF
20%
6.3V
X5R-CERM
0201
ET
OMIT_TABLE
C721_K
1000PF
10%
10V
X5R
01005
ET
C722_K
100PF
5%
16V
NP0-C0G
01005
ET
C723_K
27PF
5%
16V
NP0-C0G
01005
ET
VPA_ET_K 8 9
3
PVDD
26
VCC2
ET_K
QM81004M
LGA
16 8 50_ET_DAC_N_K 8 VRAMP-
16 8 50_ET_DAC_P_K 7 VRAMP+
16 13 12 11 9 8 6 VDD_RFFE_VIO_1V8_K 15 VIO
16 12 11 9 8 6 RFFE1_DATA_K 17 DATA
16 12 11 9 8 6 RFFE1_CLK_K 16 CLK
GND
THERM
PAD
1 2 4 5 6 9 10 11 12 13 14 18 19 20 21 22 23 24 25 27 28 29 30 31 32
USID=0XC

CONFIDENTIAL AND PROPRIETARY APPLE SYSTEM DESIGN. FOR REFERENCE PURPOSE ONLY - NOT A CHANGE REQUEST

PAGE TITLE
ET MODULATOR

Apple Inc.

DRAWING NUMBER 051-02247
SIZE D
REVISION [illegible]
BRANCH evt-1
PAGE 7 OF 17
SHEET 19 OF 34

NOTICE OF PROPRIETARY PROPERTY:
THE INFORMATION CONTAINED HEREIN IS THE PROPRIETARY PROPERTY OF APPLE INC.
THE POSESSOR AGREES TO THE FOLLOWING:
I TO MAINTAIN THIS DOCUMENT IN CONFIDENCE
II NOT TO REPRODUCE OR COPY IT
III NOT TO REVEAL OR PUBLISH IT IN WHOLE OR PART
IV ALL RIGHTS RESERVED

TDD TRANSMIT

2G PA

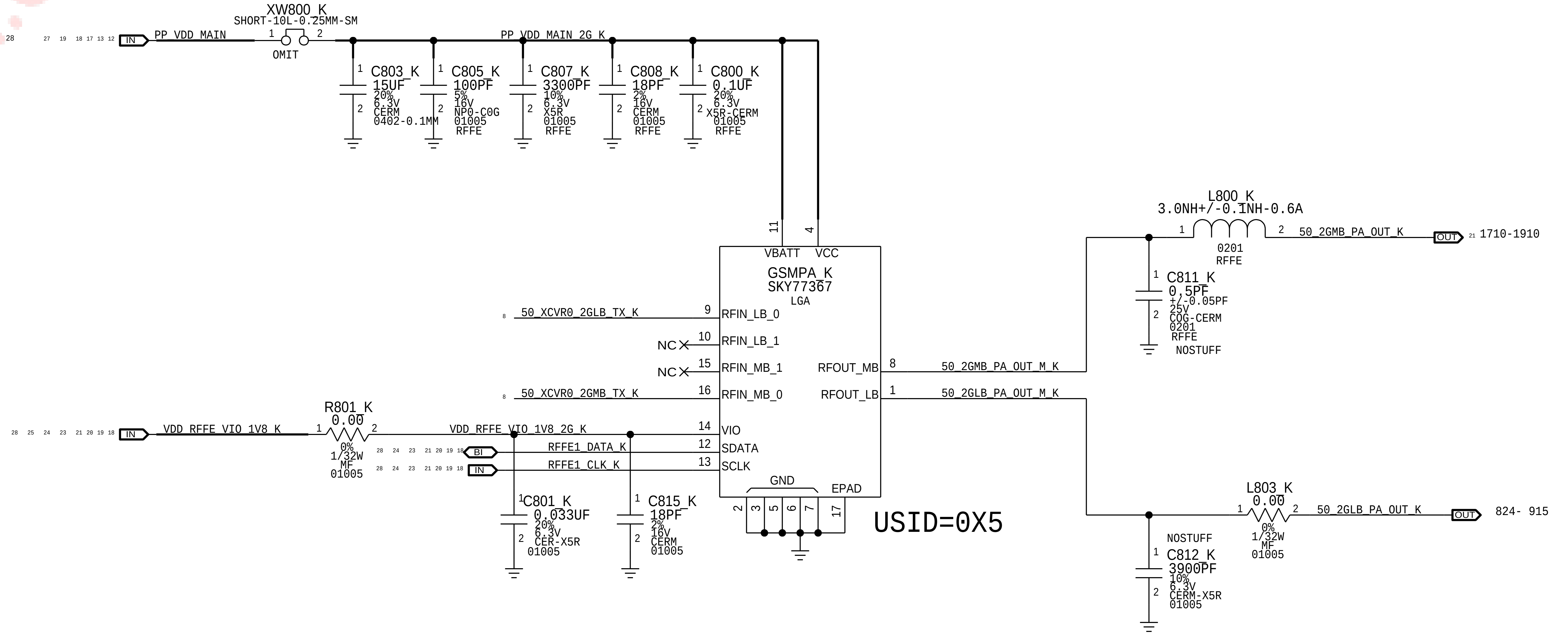
XW800_K
SHORT-10L-0.25MM-SM
OMIT
PP_VDD_MAIN
PP_VDD_MAIN_2G_K
C803_K 15UF 20% 6.3V CERM 0402-0.1MM
C805_K 100PF 5% 16V NP0-C0G 01005 RFFE
C807_K 3300PF 10% 6.3V X5R 01005 RFFE
C808_K 18PF 2% 16V CERM 01005 RFFE
C800_K 0.1UF 20% 6.3V X5R-CERM 01005 RFFE
VBATT VCC
GSMPA_K
SKY77367
LGA
50_XCVR0_2GLB_TX_K
RFIN_LB_0
NC
RFIN_LB_1
NC
RFIN_MB_1
50_XCVR0_2GMB_TX_K
RFIN_MB_0
RFOUT_MB
RFOUT_LB
VDD_RFFE_VIO_1V8_K
R801_K 0.00 0% 1/32W MF 01005
VDD_RFFE_VIO_1V8_2G_K
RFFE1_DATA_K
RFFE1_CLK_K
VIO
SDATA
SCLK
GND
EPAD
C801_K 0.033UF 20% 6.3V CER-X5R 01005
C815_K 18PF 2% 16V CERM 01005
USID=0X5
50_2GMB_PA_OUT_M_K
50_2GLB_PA_OUT_M_K
L800_K 3.0NH+/-0.1NH-0.6A 0201 RFFE
50_2GMB_PA_OUT_K
1710-1910
C811_K 0.5PF +/-0.05PF 25V C0G-CERM 0201 RFFE NOSTUFF
L803_K 0.00 0% 1/32W MF 01005
50_2GLB_PA_OUT_K
824- 915
NOSTUFF
C812_K 3900PF 10% 6.3V CERM-X5R 01005

XCVR0 TX

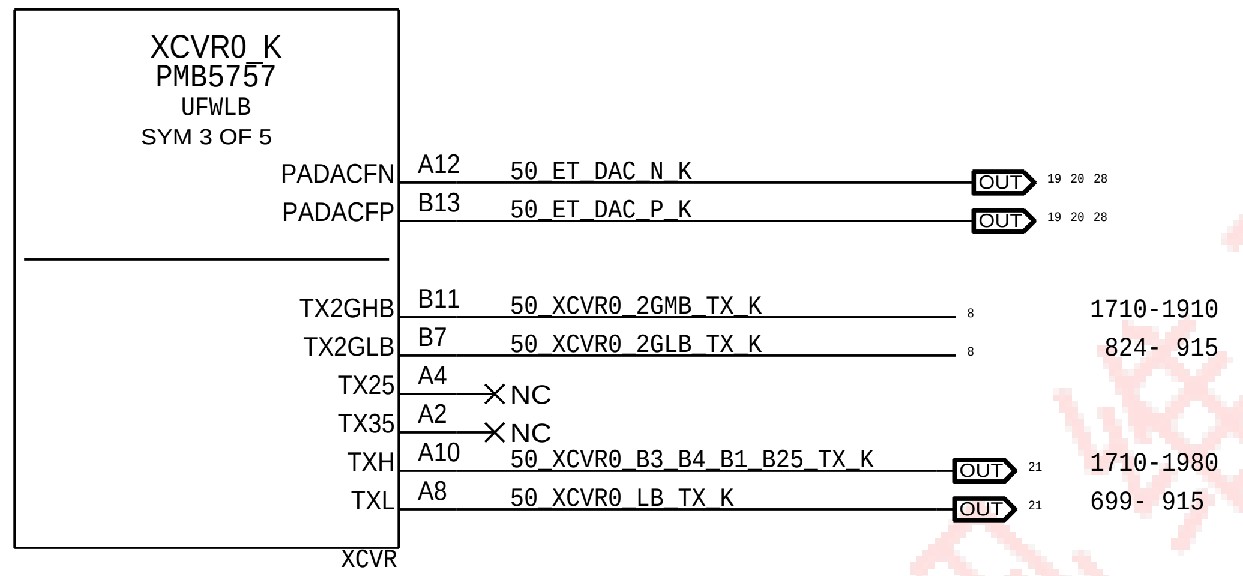
XCVR0_K
PMB5757
UFWLB
SYM 3 OF 5
PADACFN A12 50_ET_DAC_N_K
PADACFP B13 50_ET_DAC_P_K
TX2GHB B11 50_XCVR0_2GMB_TX_K 1710-1910
TX2GLB B7 50_XCVR0_2GLB_TX_K 824- 915
TX25 A4 NC
TX35 A2 NC
TXH A10 50_XCVR0_B3_B4_B1_B25_TX_K 1710-1980
TXL A8 50_XCVR0_LB_TX_K 699- 915
XCVR

XCVR1 TX

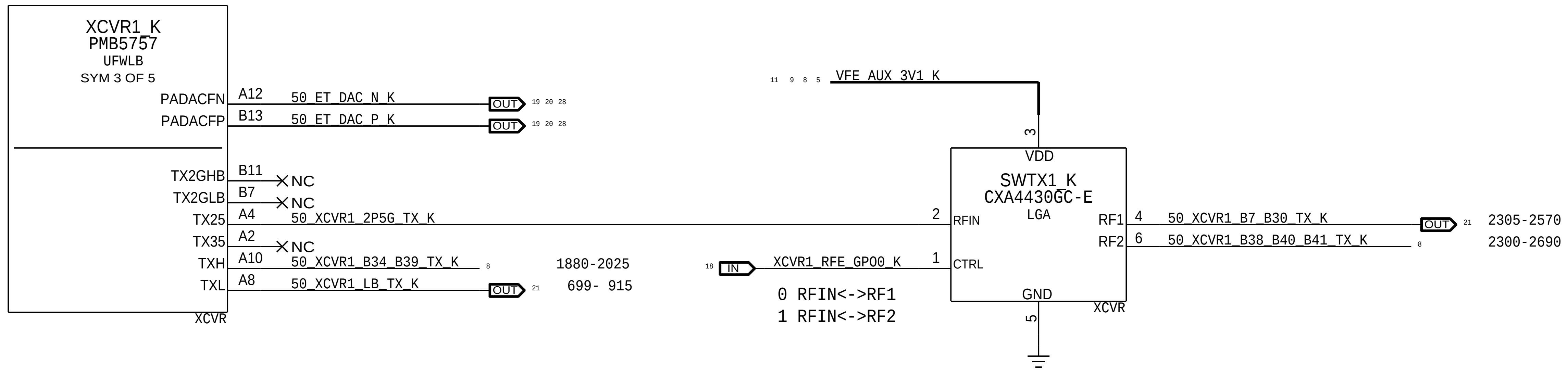
XCVR1_K
PMB5757
UFWLB
SYM 3 OF 5
PADACFN A12 50_ET_DAC_N_K
PADACFP B13 50_ET_DAC_P_K
TX2GHB B11 NC
TX2GLB B7 NC
TX25 A4 50_XCVR1_2P5G_TX_K
TX35 A2 NC
TXH A10 50_XCVR1_B34_B39_TX_K 1880-2025
TXL A8 50_XCVR1_LB_TX_K 699- 915
XCVR
VFE_AUX_3V1_K
VDD
SWTX1_K
CXA4430GC-E
LGA
RFIN
CTRL
XCVR1_RFE_GPO0_K
0 RFIN<->RF1
1 RFIN<->RF2
RF1 50_XCVR1_B7_B30_TX_K 2305-2570
RF2 50_XCVR1_B38_B40_B41_TX_K 2300-2690
GND
XCVR

MB HB TDD S-PAD

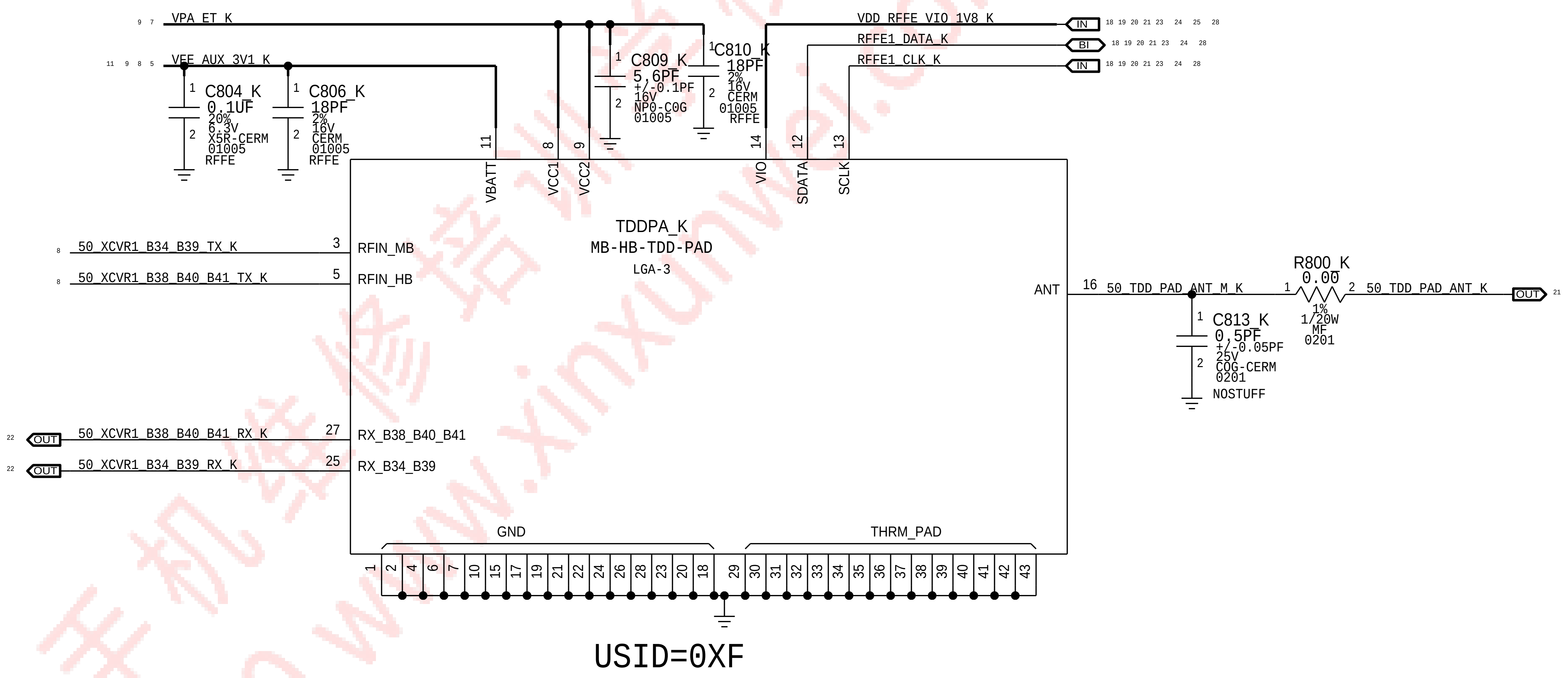
VPA_ET_K
VFE_AUX_3V1_K
C804_K 0.1UF 20% 6.3V X5R-CERM 01005 RFFE
C806_K 18PF 2% 16V CERM 01005 RFFE
C809_K 5.6PF +/-0.1PF 16V NP0-C0G 01005
C810_K 18PF 2% 16V CERM 01005 RFFE
VDD_RFFE_VIO_1V8_K
RFFE1_DATA_K
RFFE1_CLK_K
VBATT VCC1 VCC2 VIO SDATA SCLK
TDDPA_K
MB-HB-TDD-PAD
LGA-3
50_XCVR1_B34_B39_TX_K RFIN_MB
50_XCVR1_B38_B40_B41_TX_K RFIN_HB
ANT
50_TDD_PAD_ANT_M_K
R800_K 0.00 1% 1/20W MF 0201
50_TDD_PAD_ANT_K
C813_K 0.5PF +/-0.05PF 25V C0G-CERM 0201 NOSTUFF
50_XCVR1_B38_B40_B41_RX_K RX_B38_B40_B41
50_XCVR1_B34_B39_RX_K RX_B34_B39
GND
THRM_PAD

USID=0XF

CONFIDENTIAL AND PROPRIETARY APPLE SYSTEM DESIGN. FOR REFERENCE PURPOSE ONLY - NOT A CHANGE REQUEST

PAGE TITLE
TDD TRANSMIT

Apple Inc.
DRAWING NUMBER 051-02247
SIZE D
REVISION 7.0.0
BRANCH evt-1
PAGE 8 OF 17
SHEET 20 OF 34

NOTICE OF PROPRIETARY PROPERTY:
THE INFORMATION CONTAINED HEREIN IS THE PROPRIETARY PROPERTY OF APPLE INC.
THE POSESSOR AGREES TO THE FOLLOWING:
I TO MAINTAIN THIS DOCUMENT IN CONFIDENCE
II NOT TO REPRODUCE OR COPY IT
III NOT TO REVEAL OR PUBLISH IT IN WHOLE OR PART
IV ALL RIGHTS RESERVED

FDD TRANSMIT

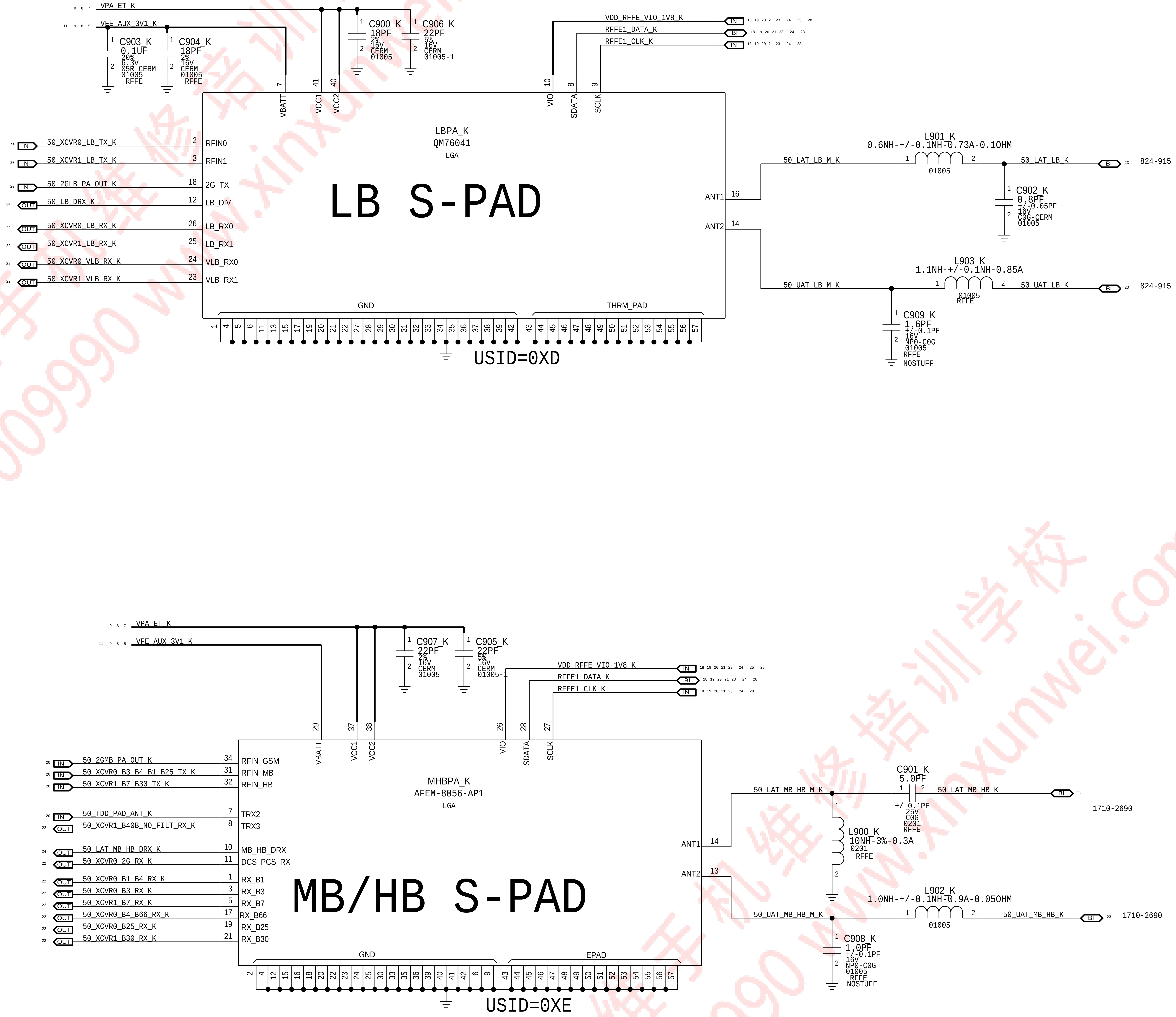
VPA_ET_K
VFE_AUX_3V1_K
C903_K 0.1UF 20% 6.3V X5R-CERM 01005 RFFE
C904_K 18PF 2% 16V CERM 01005 RFFE
C900_K 18PF 2% 16V CERM 01005
C906_K 22PF 5% 16V CERM 01005-1
VDD_RFFE_VIO_1V8_K
RFFE1_DATA_K
RFFE1_CLK_K
IN
BI
OUT
VBATT
VCC1
VCC2
VIO
SDATA
SCLK
LBPA_K
QM76041
LGA
LB S-PAD
50_XCVR0_LB_TX_K
50_XCVR1_LB_TX_K
50_2GLB_PA_OUT_K
50_LB_DRX_K
50_XCVR0_LB_RX_K
50_XCVR1_LB_RX_K
50_XCVR0_VLB_RX_K
50_XCVR1_VLB_RX_K
RFIN0
RFIN1
2G_TX
LB_DIV
LB_RX0
LB_RX1
VLB_RX0
VLB_RX1
ANT1
ANT2
GND
THRM_PAD
USID=0XD
L901_K 0.6NH-+/-0.1NH-0.73A-0.1OHM 01005
50_LAT_LB_M_K
50_LAT_LB_K
824-915
C902_K 0.8PF +/-0.05PF 16V C0G-CERM 01005
L903_K 1.1NH-+/-0.1NH-0.85A 01005 RFFE
50_UAT_LB_M_K
50_UAT_LB_K
824-915
C909_K 1.6PF +/-0.1PF 16V NP0-C0G 01005 RFFE NOSTUFF
C907_K 22PF 2% 16V CERM 01005
C905_K 22PF 5% 16V CERM 01005-1
MHBPA_K
AFEM-8056-AP1
LGA
MB/HB S-PAD
50_2GMB_PA_OUT_K
50_XCVR0_B3_B4_B1_B25_TX_K
50_XCVR1_B7_B30_TX_K
50_TDD_PAD_ANT_K
50_XCVR1_B40B_NO_FILT_RX_K
50_LAT_MB_HB_DRX_K
50_XCVR0_2G_RX_K
50_XCVR0_B1_B4_RX_K
50_XCVR0_B3_RX_K
50_XCVR1_B7_RX_K
50_XCVR0_B4_B66_RX_K
50_XCVR0_B25_RX_K
50_XCVR1_B30_RX_K
RFIN_GSM
RFIN_MB
RFIN_HB
TRX2
TRX3
MB_HB_DRX
DCS_PCS_RX
RX_B1
RX_B3
RX_B7
RX_B66
RX_B25
RX_B30
EPAD
USID=0XE
C901_K 5.0PF +/-0.1PF 25V C0G 0201 RFFE
50_LAT_MB_HB_M_K
50_LAT_MB_HB_K
1710-2690
L900_K 10NH-3%-0.3A 0201 RFFE
L902_K 1.0NH-+/-0.1NH-0.9A-0.05OHM 01005
50_UAT_MB_HB_M_K
50_UAT_MB_HB_K
1710-2690
C908_K 1.0PF +/-0.1PF 16V NP0-C0G 01005 RFFE NOSTUFF

CONFIDENTIAL AND PROPRIETARY APPLE SYSTEM DESIGN. FOR REFERENCE PURPOSE ONLY - NOT A CHANGE REQUEST

PAGE TITLE
FDD TRANSMIT

Apple Inc.

DRAWING NUMBER 051-02247
SIZE D

BRANCH evt-1

PAGE 9 OF 17

SHEET 21 OF 34

NOTICE OF PROPRIETARY PROPERTY:
THE INFORMATION CONTAINED HEREIN IS THE PROPRIETARY PROPERTY OF APPLE INC.
THE POSESSOR AGREES TO THE FOLLOWING:
I TO MAINTAIN THIS DOCUMENT IN CONFIDENCE
II NOT TO REPRODUCE OR COPY IT
III NOT TO REVEAL OR PUBLISH IT IN WHOLE OR PART
IV ALL RIGHTS RESERVED

迅维职业技能培训中心
400-800-9990

PRIMARY RECIEVE

XCVR0 PRX
XCVR0_K
PMB5757
UFWLB
SYM 2 OF 5
FBRRF1 A16 50_XCVR0_LAT_CPLR_K IN 23
FBRRF2 A14 50_XCVR0_UAT_CPLR_K IN 23
VSS B15
RX1 W2 50_XCVR0_B3_RX_M_K 1805-1880
RX2 V1 50_XCVR0_GSM1900_RX_M_K 1930-1990
RX3 U2
RX4 T1 50_XCVR0_B4_B66_RX_M_K 2110-2155
RX5 R2 50_XCVR0_GSM1800_RX_M_K 1805-1880
RX6 P1 50_XCVR0_B1_B4_RX_M_K 2110-2170
RX7 N2
RX8 M1 50_XCVR0_B25_RX_M_K 1930-1995
RX9 L2
RX10 K1 50_XCVR0_VLB_RX_M_K 717- 821
RX11 J2
RX12 H1 50_XCVR0_LB_RX_M_K 852- 960
RX13 G2
RX14 F1
RX15 E2
RX16 D1
XCVR
L1001_K
22NH-3%-0.14A-2.26OHM
01005
XCVR
50_XCVR0_VLB_RX_M_K
50_XCVR0_VLB_RX_K
L1030_K
10NH-+/-3%-0.25A
01005
XCVR
50_XCVR0_LB_RX_M_K
50_XCVR0_LB_RX_K
L1008_K
9.1NH-3%-0.17A-1.7OHM
01005
XCVR
NOSTUFF
R1000_K
0.00
0%
1/32W
MF
01005
XCVR
50_XCVR0_B1_B4_RX_M_K
50_XCVR0_B1_B4_RX_K
L1027_K
3.3NH+/-0.1NH-180MA
01005
XCVR
L1003_K
3.9NH+/-0.1NH-180MA
01005
XCVR
50_XCVR0_B4_B66_RX_M_K
50_XCVR0_B4_B66_RX_K
L1009_K
1.6PF
+/-0.1PF
16V
NP0-C0G
01005
XCVR
L1004_K
1.2NH-+/-0.1NH-0.8A
01005
XCVR
50_XCVR0_B25_RX_M_K
50_XCVR0_B25_RX_K
L1010_K
2.4NH-+/-0.1NH-0.45A
01005
XCVR
L1005_K
3.6NH+/-0.1NH-180MA
01005
XCVR
50_XCVR0_B3_RX_M_K
50_XCVR0_B3_RX_K
L1011_K
2.6NH-+/-0.1NH-0.45A-0.2OHM
01005
XCVR
NOSTUFF
L1006_K
0.6NH+/-0.1NH-320MA
01005
XCVR
50_XCVR0_GSM1800_RX_M_K
50_XCVR0_GSM1800_RX_K
L1012_K
3.0NH+/-0.1NH-200MA
01005
XCVR
L1007_K
1.3NH+/-0.1NH-220MA
01005
50_XCVR0_GSM1900_RX_M_K
50_XCVR0_GSM1900_RX_K
L1013_K
3.0NH+/-0.1NH-200MA
01005
XCVR
GSMDI_K
GSM1800-1900
B8867
LGA
GSM1800
GSM1900
COMMON
GND
50_XCVR0_2G_RX_K
L1014_K
3.6NH-+/-0.1NH-0.35A-0.3OHM
01005
XCVR1 PRX
XCVR1_K
PMB5757
UFWLB
SYM 2 OF 5
FBRRF1 A16 50_XCVR1_LAT_CPLR_K IN 23
FBRRF2 A14 50_XCVR1_UAT_CPLR_K IN 23
VSS B15
RX1 W2 50_XCVR1_B7_RX_M_K 2620-2690
RX2 V1 50_XCVR1_B30_RX_M_K 2350-2360
RX3 U2
RX4 T1 50_XCVR1_B38_B40_B41_RX_M_K 2300-2690
RX5 R2 50_XCVR1_LB_RX_M_K 852- 960
RX6 P1 50_XCVR1_B40B_NO_FILT_RX_M_K 2300-2400
RX7 N2
RX8 M1 50_XCVR1_VLB_RX_M_K 717- 821
RX9 L2
RX10 K1 50_XCVR1_B34_B39_RX_M_K 1880-2025
RX11 J2
RX12 H1
RX13 G2
RX14 F1
RX15 E2
RX16 D1
XCVR
L1016_K
15NH-3%-0.17A-1.53OHM
01005
XCVR
50_XCVR1_VLB_RX_M_K
50_XCVR1_VLB_RX_K
L1000_K
8.2NH-3%-0.3A-0.5OHM
01005
XCVR
50_XCVR1_LB_RX_M_K
50_XCVR1_LB_RX_K
L1023_K
18NH-3%-0.16A-1.63OHM
01005
XCVR
L1017_K
0.00
0%
1/32W
MF
01005
50_XCVR1_B30_RX_M_K
50_XCVR1_B30_RX_K
L1024_K
3.3NH-+/-0.1NH-0.4A-0.25OHM
01005
XCVR
L1018_K
1.0NH-+/-0.1NH-0.22A-0.9OHM
01005
50_XCVR1_B7_RX_M_K
50_XCVR1_B7_RX_K
L1015_K
1.5NH+/-0.1NH-220MA
01005
XCVR
L1019_K
7PF
+/-0.1PF
16V
NP0-C0G
01005
XCVR
50_XCVR1_B38_B40_B41_RX_M_K
50_XCVR1_B38_B40_B41_RX_K
L1025_K
1.3NH-+/-0.1NH-0.7A-0.08OHM
01005-1
XCVR
L1020_K
0.00
0%
1/32W
MF
01005
XCVR
50_XCVR1_B34_B39_RX_M_K
50_XCVR1_B34_B39_RX_K
L1026_K
3.6NH-+/-0.1NH-0.35A-0.3OHM
01005
L1021_K
2.4NH-+/-0.1NH-0.45A
01005
50_XCVR1_B40B_NO_FILT_RX_M_K
50_XCVR1_B40B_NO_FILT_RX_K
C1001_K
2.0PF
+/-0.1PF
16V
NP0-C0G
01005
XCVR

CONFIDENTIAL AND PROPRIETARY APPLE SYSTEM DESIGN. FOR REFERENCE PURPOSE ONLY - NOT A CHANGE REQUEST

PAGE TITLE
PRIMARY RECEIVE

Apple Inc.

DRAWING NUMBER 051-02247
SIZE D
REVISION 7.0.0
BRANCH evt-1
PAGE 10 OF 17
SHEET 22 OF 34

NOTICE OF PROPRIETARY PROPERTY:

THE INFORMATION CONTAINED HEREIN IS THE PROPRIETARY PROPERTY OF APPLE INC. THE POSESSOR AGREES TO THE FOLLOWING:
I TO MAINTAIN THIS DOCUMENT IN CONFIDENCE
II NOT TO REPRODUCE OR COPY IT
III NOT TO REVEAL OR PUBLISH IT IN WHOLE OR PART
IV ALL RIGHTS RESERVED

迅维职业技能培训中心
400-800-9990

LOWER ANTENNA AND COUPLER

LOWER ANTENNA COUPLER

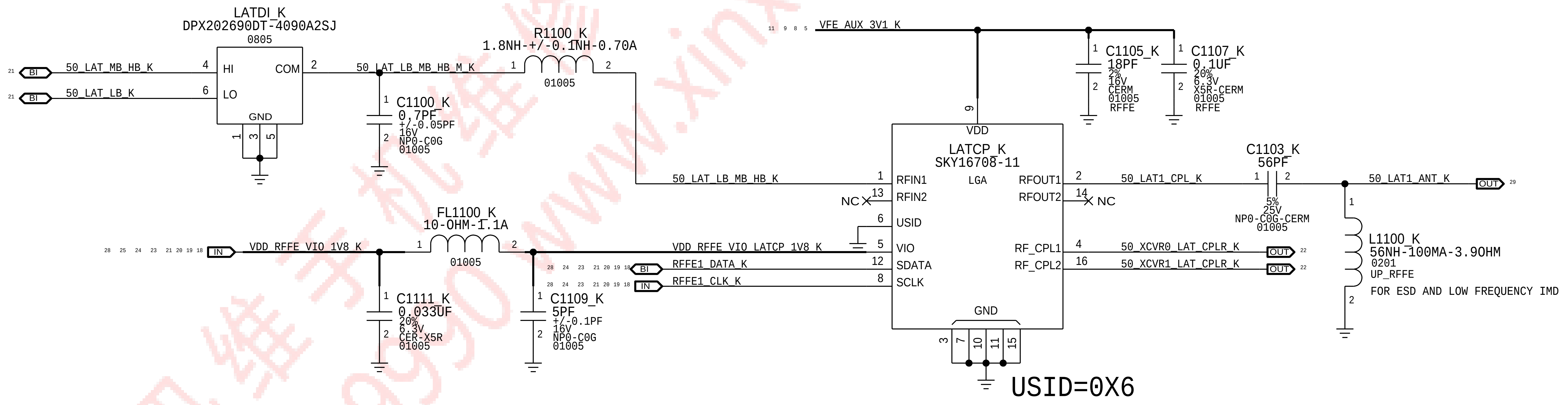
LATDI_K
DPX202690DT-4090A2SJ
0805
HI
LO
COM
GND
50_LAT_MB_HB_K
50_LAT_LB_K
BI
50_LAT_LB_MB_HB_M_K
C1100_K
0.7PF
+/-0.05PF
16V
NP0-C0G
01005
R1100_K
1.8NH-+/-0.1NH-0.70A
01005
VFE_AUX_3V1_K
50_LAT_LB_MB_HB_K
FL1100_K
10-OHM-1.1A
01005
VDD_RFFE_VIO_1V8_K
IN
VDD_RFFE_VIO_LATCP_1V8_K
RFFE1_DATA_K
RFFE1_CLK_K
C1111_K
0.033UF
20%
6.3V
CER-X5R
01005
C1109_K
5PF
+/-0.1PF
16V
NP0-C0G
01005
C1105_K
18PF
2%
16V
CERM
01005
RFFE
C1107_K
0.1UF
20%
6.3V
X5R-CERM
01005
RFFE
VDD
LATCP_K
SKY16708-11
LGA
RFIN1
RFIN2
USID
VIO
SDATA
SCLK
RFOUT1
RFOUT2
RF_CPL1
RF_CPL2
GND
NC
NC
C1103_K
56PF
5%
25V
NP0-C0G-CERM
01005
50_LAT1_CPL_K
50_LAT1_ANT_K
OUT
50_XCVR0_LAT_CPLR_K
50_XCVR1_LAT_CPLR_K
L1100_K
56NH-100MA-3.9OHM
0201
UP_RFFE
FOR ESD AND LOW FREQUENCY IMD
USID=0X6

UPPER ANTENNA COUPLER

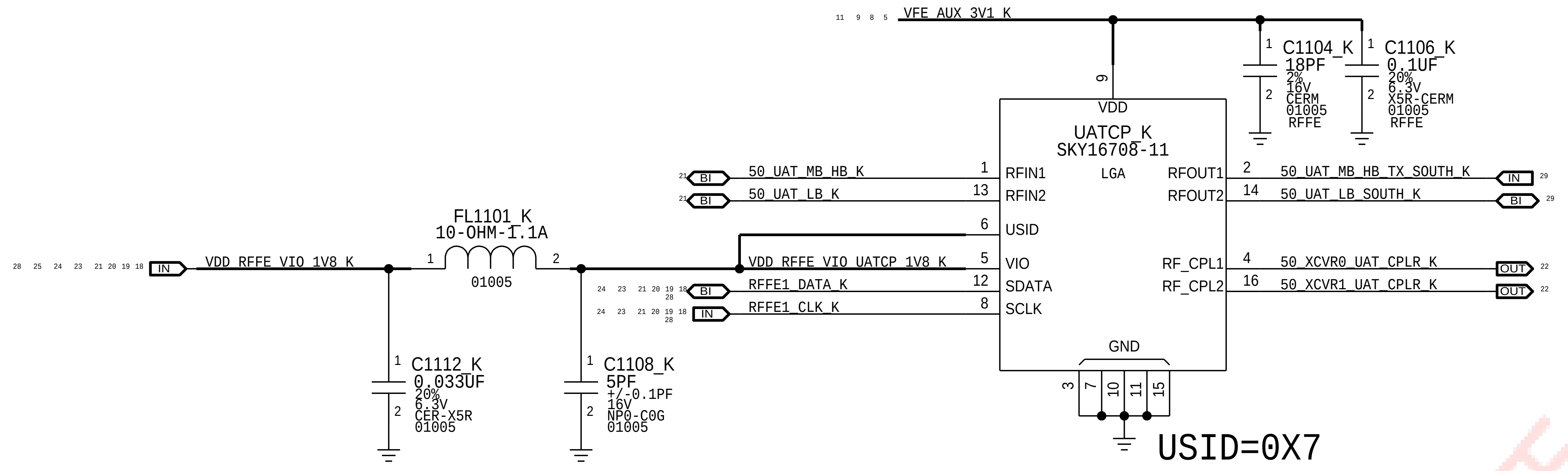
VFE_AUX_3V1_K
C1104_K
18PF
2%
16V
CERM
01005
RFFE
C1106_K
0.1UF
20%
6.3V
X5R-CERM
01005
RFFE
VDD
UATCP_K
SKY16708-11
LGA
RFIN1
RFIN2
USID
VIO
SDATA
SCLK
RFOUT1
RFOUT2
RF_CPL1
RF_CPL2
GND
50_UAT_MB_HB_K
50_UAT_LB_K
50_UAT_MB_HB_TX_SOUTH_K
50_UAT_LB_SOUTH_K
50_XCVR0_UAT_CPLR_K
50_XCVR1_UAT_CPLR_K
FL1101_K
10-OHM-1.1A
01005
VDD_RFFE_VIO_1V8_K
VDD_RFFE_VIO_UATCP_1V8_K
RFFE1_DATA_K
RFFE1_CLK_K
C1112_K
0.033UF
20%
6.3V
CER-X5R
01005
C1108_K
5PF
+/-0.1PF
16V
NP0-C0G
01005
USID=0X7

LAT TUNER GPO

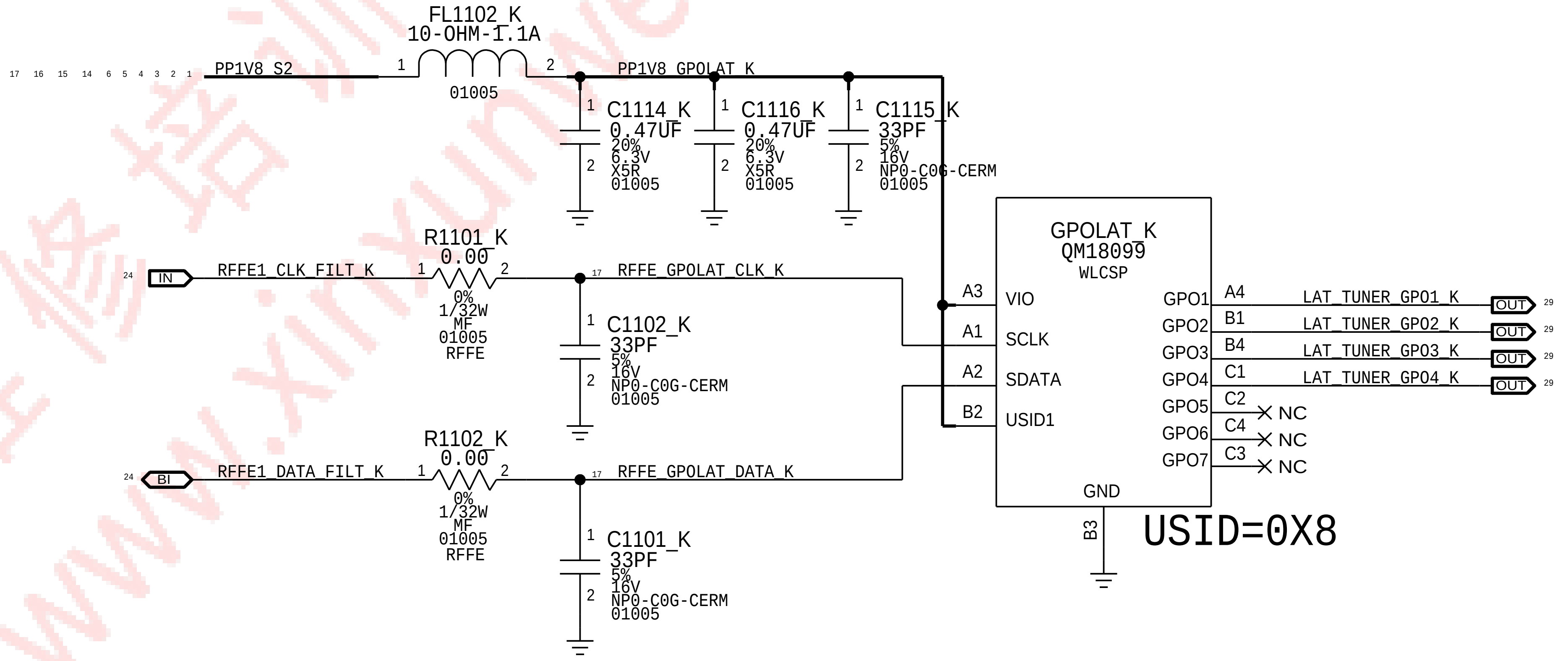
FL1102_K
10-OHM-1.1A
01005
PP1V8_S2
PP1V8_GPOLAT_K
C1114_K
0.47UF
20%
6.3V
X5R
01005
C1116_K
0.47UF
20%
6.3V
X5R
01005
C1115_K
33PF
5%
16V
NP0-C0G-CERM
01005
R1101_K
0.00
0%
1/32W
MF
01005
RFFE
RFFE1_CLK_FILT_K
RFFE_GPOLAT_CLK_K
C1102_K
33PF
5%
16V
NP0-C0G-CERM
01005
R1102_K
0.00
0%
1/32W
MF
01005
RFFE
RFFE1_DATA_FILT_K
RFFE_GPOLAT_DATA_K
C1101_K
33PF
5%
16V
NP0-C0G-CERM
01005
GPOLAT_K
QM18099
WLCSP
VIO
SCLK
SDATA
USID1
GPO1
GPO2
GPO3
GPO4
GPO5
GPO6
GPO7
GND
LAT_TUNER_GPO1_K
LAT_TUNER_GPO2_K
LAT_TUNER_GPO3_K
LAT_TUNER_GPO4_K
OUT
NC
NC
NC
USID=0X8

PAGE TITLE
LOWER ANTENNA & COUPLERS

Apple Inc.

DRAWING NUMBER 051-02247
SIZE D
REVISION 7.0.0
BRANCH evt-1
PAGE 11 OF 17
SHEET 23 OF 34

NOTICE OF PROPRIETARY PROPERTY:
THE INFORMATION CONTAINED HEREIN IS THE PROPRIETARY PROPERTY OF APPLE INC.
THE POSESSOR AGREES TO THE FOLLOWING:
I TO MAINTAIN THIS DOCUMENT IN CONFIDENCE
II NOT TO REPRODUCE OR COPY IT
III NOT TO REVEAL OR PUBLISH IT IN WHOLE OR PART
IV ALL RIGHTS RESERVED

CONFIDENTIAL AND PROPRIETARY APPLE SYSTEM DESIGN. FOR REFERENCE PURPOSE ONLY - NOT A CHANGE REQUEST

DIVERSITY RECEIVE ASM'S

XCVR0 DRX

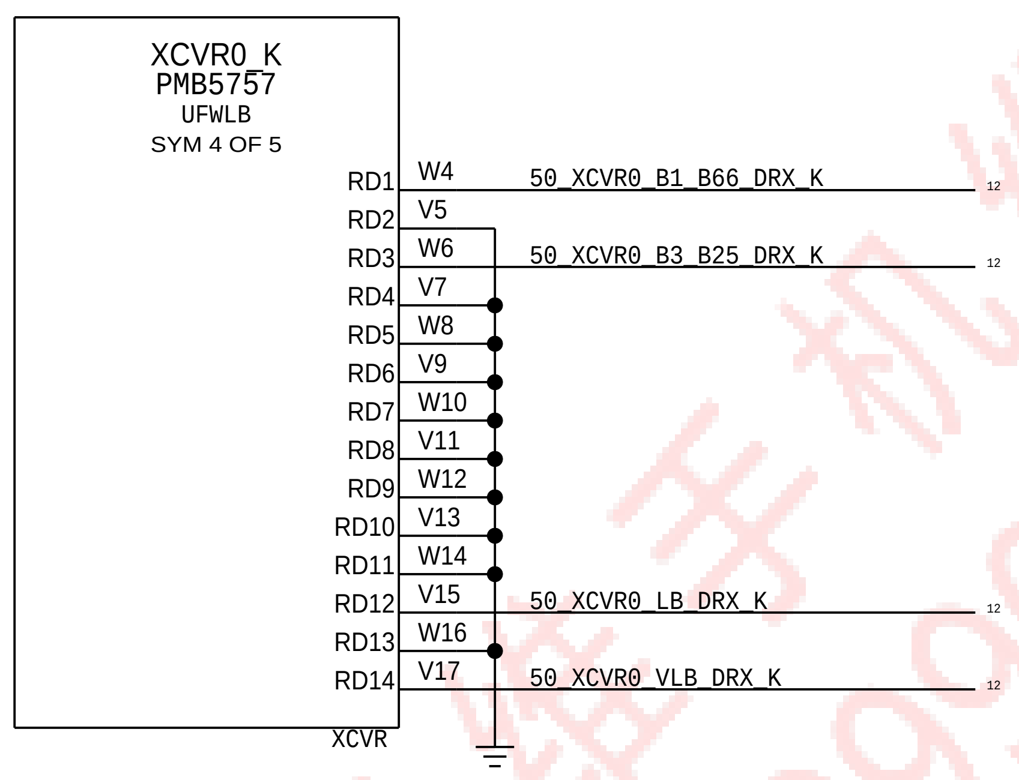
XCVR0_K
PMB5757
UFWLB
SYM 4 OF 5
RD1 W4 50_XCVR0_B1_B66_DRX_K 12
RD2 V5
RD3 W6 50_XCVR0_B3_B25_DRX_K 12
RD4 V7
RD5 W8
RD6 V9
RD7 W10
RD8 V11
RD9 W12
RD10 V13
RD11 W14
RD12 V15 50_XCVR0_LB_DRX_K 12
RD13 W16
RD14 V17 50_XCVR0_VLB_DRX_K 12
XCVR

DRX DSM

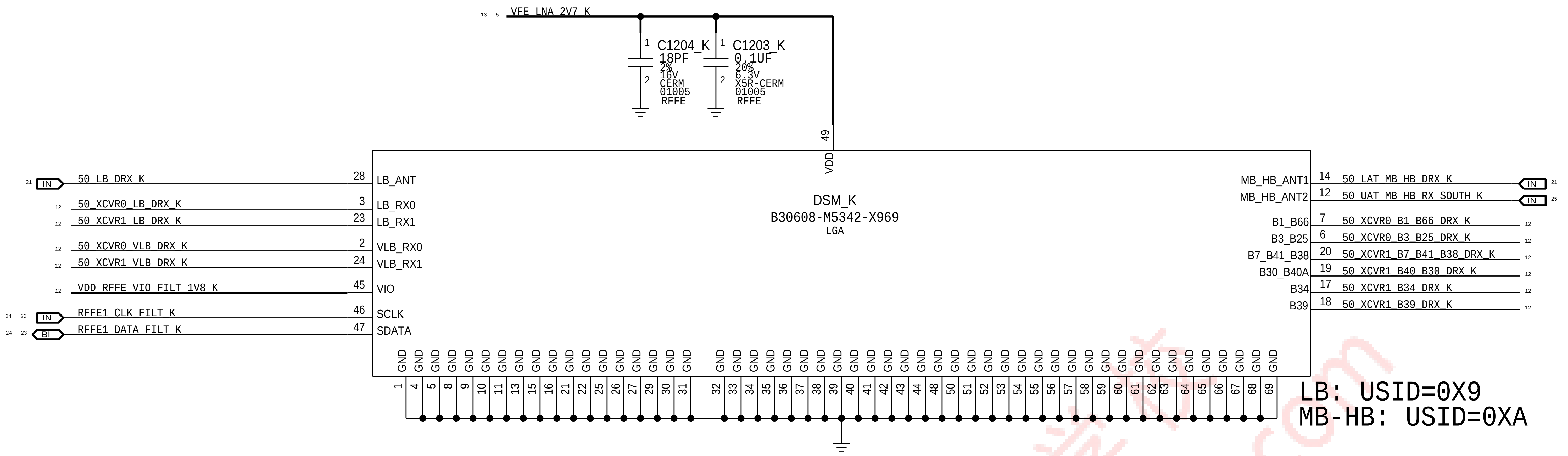
13 5 VFE_LNA_2V7_K
C1204_K 18PF 2% 16V CERM 01005 RFFE
C1203_K 0.1UF 20% 6.3V X5R-CERM 01005 RFFE
49 VDD
DSM_K
B30608-M5342-X969
LGA
21 IN 50_LB_DRX_K 28 LB_ANT
12 50_XCVR0_LB_DRX_K 3 LB_RX0
12 50_XCVR1_LB_DRX_K 23 LB_RX1
12 50_XCVR0_VLB_DRX_K 2 VLB_RX0
12 50_XCVR1_VLB_DRX_K 24 VLB_RX1
12 VDD_RFFE_VIO_FILT_1V8_K 45 VIO
24 23 IN RFFE1_CLK_FILT_K 46 SCLK
24 23 BI RFFE1_DATA_FILT_K 47 SDATA
MB_HB_ANT1 14 50_LAT_MB_HB_DRX_K IN 21
MB_HB_ANT2 12 50_UAT_MB_HB_RX_SOUTH_K IN 25
B1_B66 7 50_XCVR0_B1_B66_DRX_K 12
B3_B25 6 50_XCVR0_B3_B25_DRX_K 12
B7_B41_B38 20 50_XCVR1_B7_B41_B38_DRX_K 12
B30_B40A 19 50_XCVR1_B40_B30_DRX_K 12
B34 17 50_XCVR1_B34_DRX_K 12
B39 18 50_XCVR1_B39_DRX_K 12
GND 1 4 5 8 9 10 11 13 15 16 21 22 25 26 27 29 30 31 32 33 34 35 36 37 38 39 40 41 42 43 44 48 50 51 52 53 54 55 56 57 58 59 60 61 62 63 64 65 66 67 68 69

LB: USID=0X9
MB-HB: USID=0XA

XCVR1 DRX

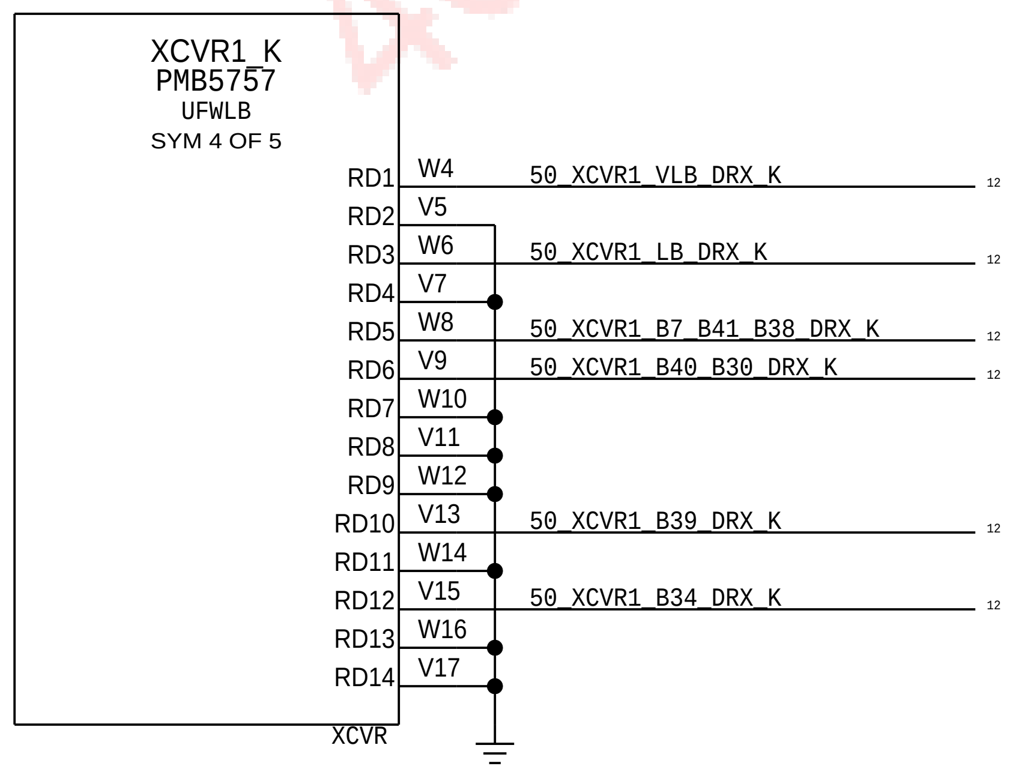
XCVR1_K
PMB5757
UFWLB
SYM 4 OF 5
RD1 W4 50_XCVR1_VLB_DRX_K 12
RD2 V5
RD3 W6 50_XCVR1_LB_DRX_K 12
RD4 V7
RD5 W8 50_XCVR1_B7_B41_B38_DRX_K 12
RD6 V9 50_XCVR1_B40_B30_DRX_K 12
RD7 W10
RD8 V11
RD9 W12
RD10 V13 50_XCVR1_B39_DRX_K 12
RD11 W14
RD12 V15 50_XCVR1_B34_DRX_K 12
RD13 W16
RD14 V17
XCVR

RFFE FILTERING

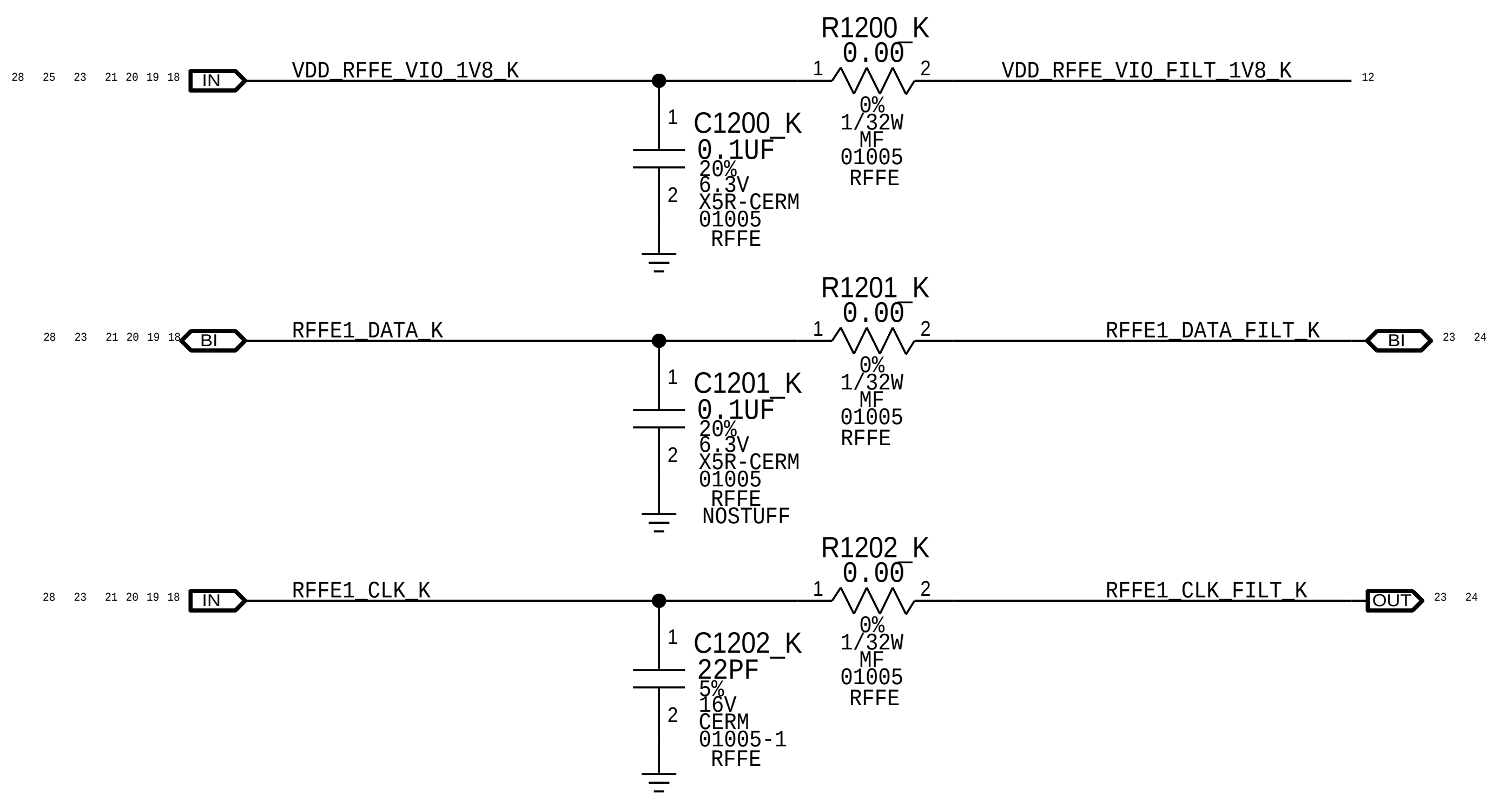
28 25 23 21 20 19 18 IN VDD_RFFE_VIO_1V8_K
R1200_K 0.00 0% 1/32W MF 01005 RFFE
VDD_RFFE_VIO_FILT_1V8_K 12
C1200_K 0.1UF 20% 6.3V X5R-CERM 01005 RFFE
28 23 21 20 19 18 BI RFFE1_DATA_K
R1201_K 0.00 0% 1/32W MF 01005 RFFE
RFFE1_DATA_FILT_K BI 23 24
C1201_K 0.1UF 20% 6.3V X5R-CERM 01005 RFFE NOSTUFF
28 23 21 20 19 18 IN RFFE1_CLK_K
R1202_K 0.00 0% 1/32W MF 01005 RFFE
RFFE1_CLK_FILT_K OUT 23 24
C1202_K 22PF 5% 16V CERM 01005-1 RFFE

CONFIDENTIAL AND PROPRIETARY APPLE SYSTEM DESIGN. FOR REFERENCE PURPOSE ONLY - NOT A CHANGE REQUEST

PAGE TITLE
DIVERSITY RECEIVE ASM'S

Apple Inc.

DRAWING NUMBER 051-02247
SIZE D
REVISION 7.0.0
BRANCH evt-1
PAGE 12 OF 17
SHEET 24 OF 34

NOTICE OF PROPRIETARY PROPERTY:

THE INFORMATION CONTAINED HEREIN IS THE PROPRIETARY PROPERTY OF APPLE INC.
THE POSESSOR AGREES TO THE FOLLOWING:
I TO MAINTAIN THIS DOCUMENT IN CONFIDENCE
II NOT TO REPRODUCE OR COPY IT
III NOT TO REVEAL OR PUBLISH IT IN WHOLE OR PART
IV ALL RIGHTS RESERVED

DIVERSITY RECEIVE LNAS

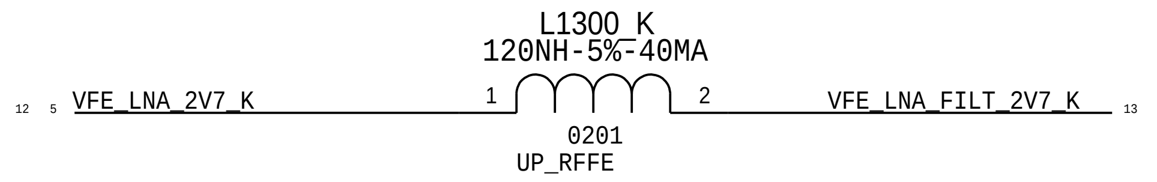
L1300_K
120NH-5%-40MA
12 5 VFE_LNA_2V7_K
1
2
VFE_LNA_FILT_2V7_K 13
0201
UP_RFFE

LB DRX LNA

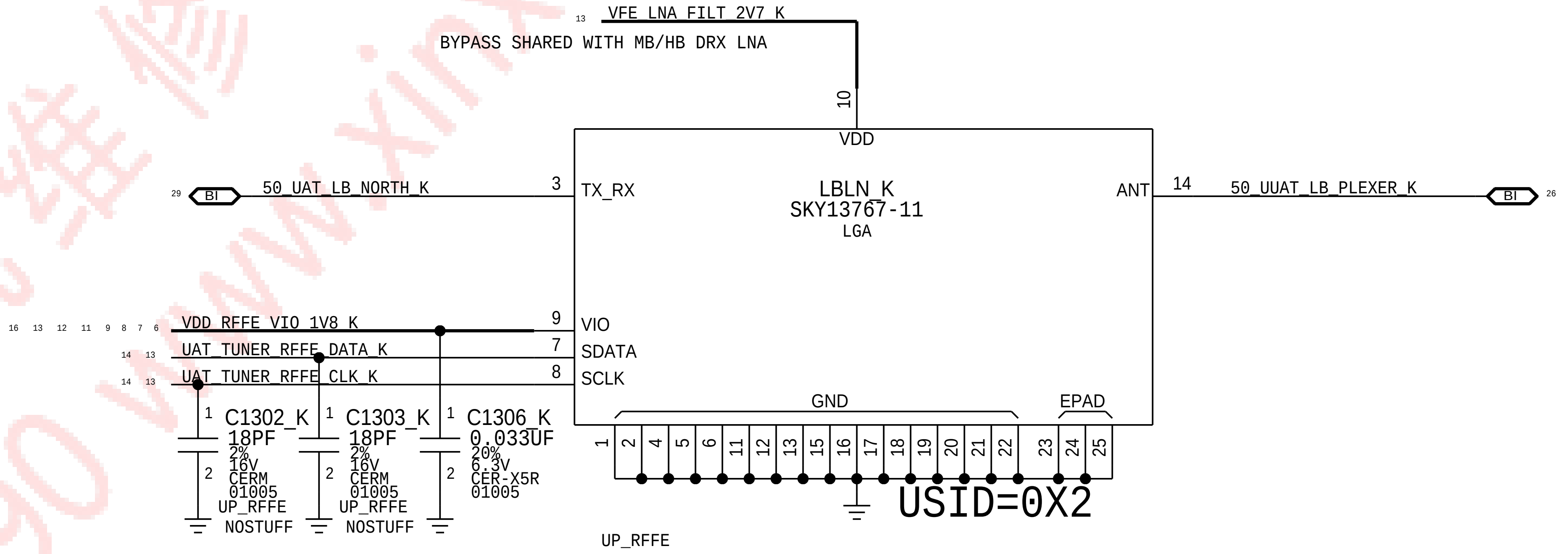
13 VFE_LNA_FILT_2V7_K
BYPASS SHARED WITH MB/HB DRX LNA
10
VDD
29 BI 50_UAT_LB_NORTH_K
3 TX_RX
LBLN_K
SKY13767-11
LGA
ANT 14
50_UUAT_LB_PLEXER_K BI 26
16 13 12 11 9 8 7 6 VDD_RFFE_VIO_1V8_K
9 VIO
14 13 UAT_TUNER_RFFE_DATA_K
7 SDATA
14 13 UAT_TUNER_RFFE_CLK_K
8 SCLK
GND
EPAD
1 2 4 5 6 11 12 13 15 16 17 18 19 20 21 22 23 24 25
C1302_K 18PF 2% 16V CERM 01005 UP_RFFE NOSTUFF
C1303_K 18PF 2% 16V CERM 01005 UP_RFFE NOSTUFF
C1306_K 0.033UF 20% 6.3V CER-X5R 01005
USID=0X2
UP_RFFE

MB/HB DRX LNA

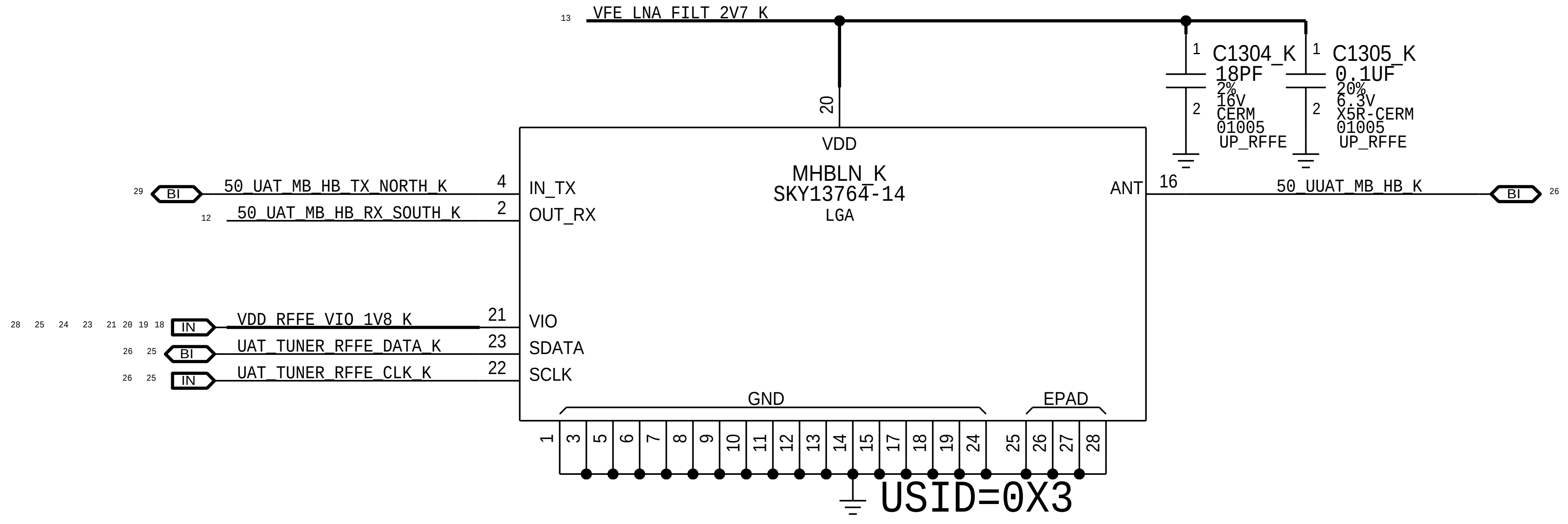
13 VFE_LNA_FILT_2V7_K
C1304_K 18PF 2% 16V CERM 01005 UP_RFFE
C1305_K 0.1UF 20% 6.3V X5R-CERM 01005 UP_RFFE
20
VDD
MHBLN_K
SKY13764-14
LGA
29 BI 50_UAT_MB_HB_TX_NORTH_K
4 IN_TX
12 50_UAT_MB_HB_RX_SOUTH_K
2 OUT_RX
ANT 16
50_UUAT_MB_HB_K BI 26
28 25 24 23 21 20 19 18 IN VDD_RFFE_VIO_1V8_K
21 VIO
26 25 BI UAT_TUNER_RFFE_DATA_K
23 SDATA
26 25 IN UAT_TUNER_RFFE_CLK_K
22 SCLK
GND
EPAD
1 3 5 6 7 8 9 10 11 12 13 14 15 17 18 19 24 25 26 27 28
USID=0X3

RFFE2 IMPEDANCE MATCHING

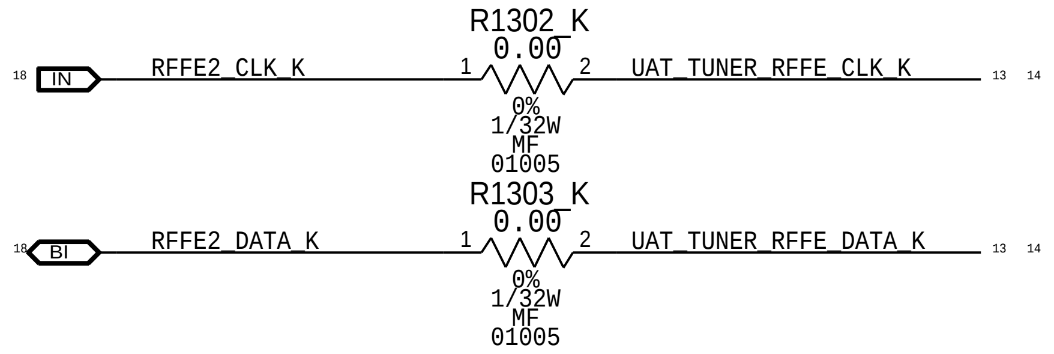
R1302_K
0.00
18 IN RFFE2_CLK_K
1
2
UAT_TUNER_RFFE_CLK_K 13 14
0% 1/32W MF 01005
R1303_K
0.00
18 BI RFFE2_DATA_K
1
2
UAT_TUNER_RFFE_DATA_K 13 14
0% 1/32W MF 01005

CONFIDENTIAL AND PROPRIETARY APPLE SYSTEM DESIGN. FOR REFERENCE PURPOSE ONLY - NOT A CHANGE REQUEST

PAGE TITLE
DIVERSITY RECEIVE LNA'S

Apple Inc.

DRAWING NUMBER 051-02247
SIZE D
REVISION 7.0.0
BRANCH evt-1
PAGE 13 OF 17
SHEET 25 OF 34

NOTICE OF PROPRIETARY PROPERTY:
THE INFORMATION CONTAINED HEREIN IS THE PROPRIETARY PROPERTY OF APPLE INC.
THE POSESSOR AGREES TO THE FOLLOWING:
I TO MAINTAIN THIS DOCUMENT IN CONFIDENCE
II NOT TO REPRODUCE OR COPY IT
III NOT TO REVEAL OR PUBLISH IT IN WHOLE OR PART
IV ALL RIGHTS RESERVED

UPPER ANTENNA FEEDS

UAT1

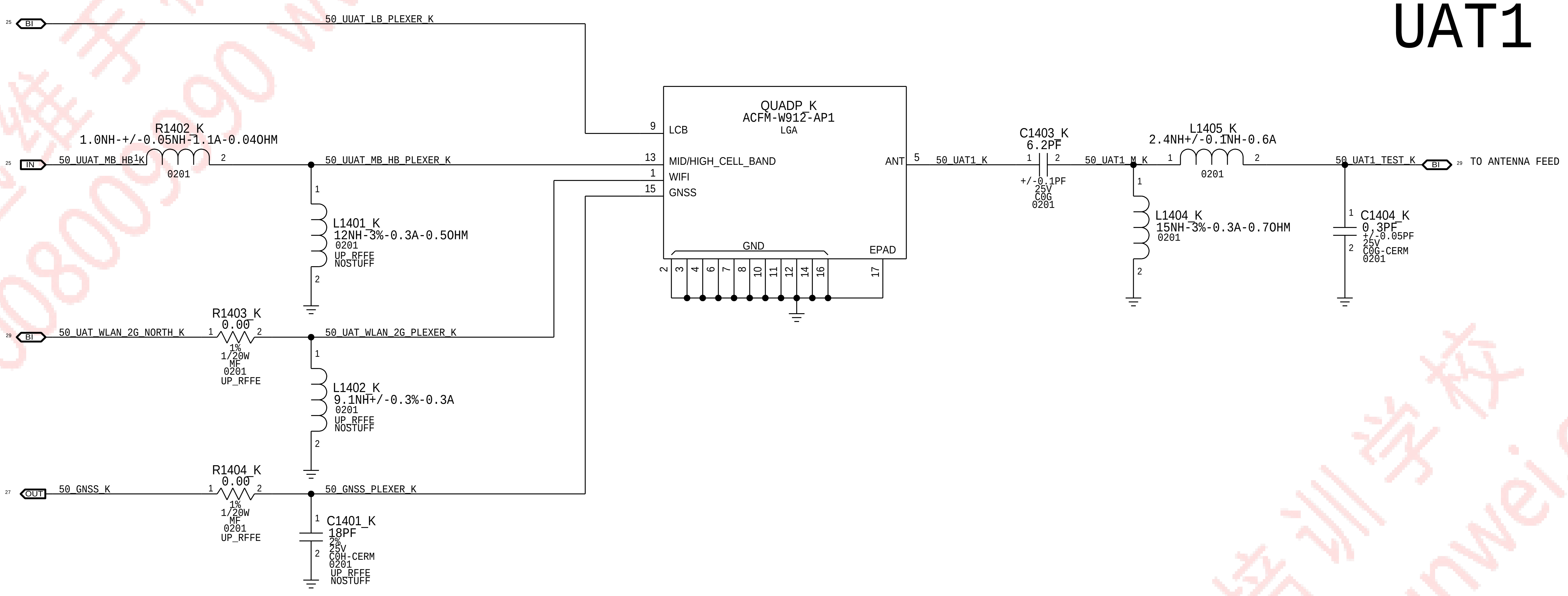
25 BI 50_UUAT_LB_PLEXER_K
QUADP_K
ACFM-W912-AP1
LGA
9 LCB
13 MID/HIGH_CELL_BAND
1 WIFI
15 GNSS
GND
EPAD
ANT 5
2 3 4 6 7 8 10 11 12 14 16 17
25 IN 50_UUAT_MB_HB_K
R1402_K
1.0NH-+/-0.05NH-1.1A-0.04OHM
0201
50_UUAT_MB_HB_PLEXER_K
L1401_K
12NH-3%-0.3A-0.5OHM
0201
UP_RFFE
NOSTUFF
29 BI 50_UAT_WLAN_2G_NORTH_K
R1403_K
0.00
1%
1/20W
MF
0201
UP_RFFE
50_UAT_WLAN_2G_PLEXER_K
L1402_K
9.1NH+/-0.3%-0.3A
0201
UP_RFFE
NOSTUFF
27 OUT 50_GNSS_K
R1404_K
0.00
1%
1/20W
MF
0201
UP_RFFE
50_GNSS_PLEXER_K
C1401_K
18PF
2%
25V
C0H-CERM
0201
UP_RFFE
NOSTUFF
50_UAT1_K
C1403_K
6.2PF
+/-0.1PF
25V
C0G
0201
50_UAT1_M_K
L1405_K
2.4NH+/-0.1NH-0.6A
0201
L1404_K
15NH-3%-0.3A-0.7OHM
0201
50_UAT1_TEST_K
BI 29 TO ANTENNA FEED
C1404_K
0.3PF
+/-0.05PF
25V
C0G-CERM
0201

UAT TUNER GPO

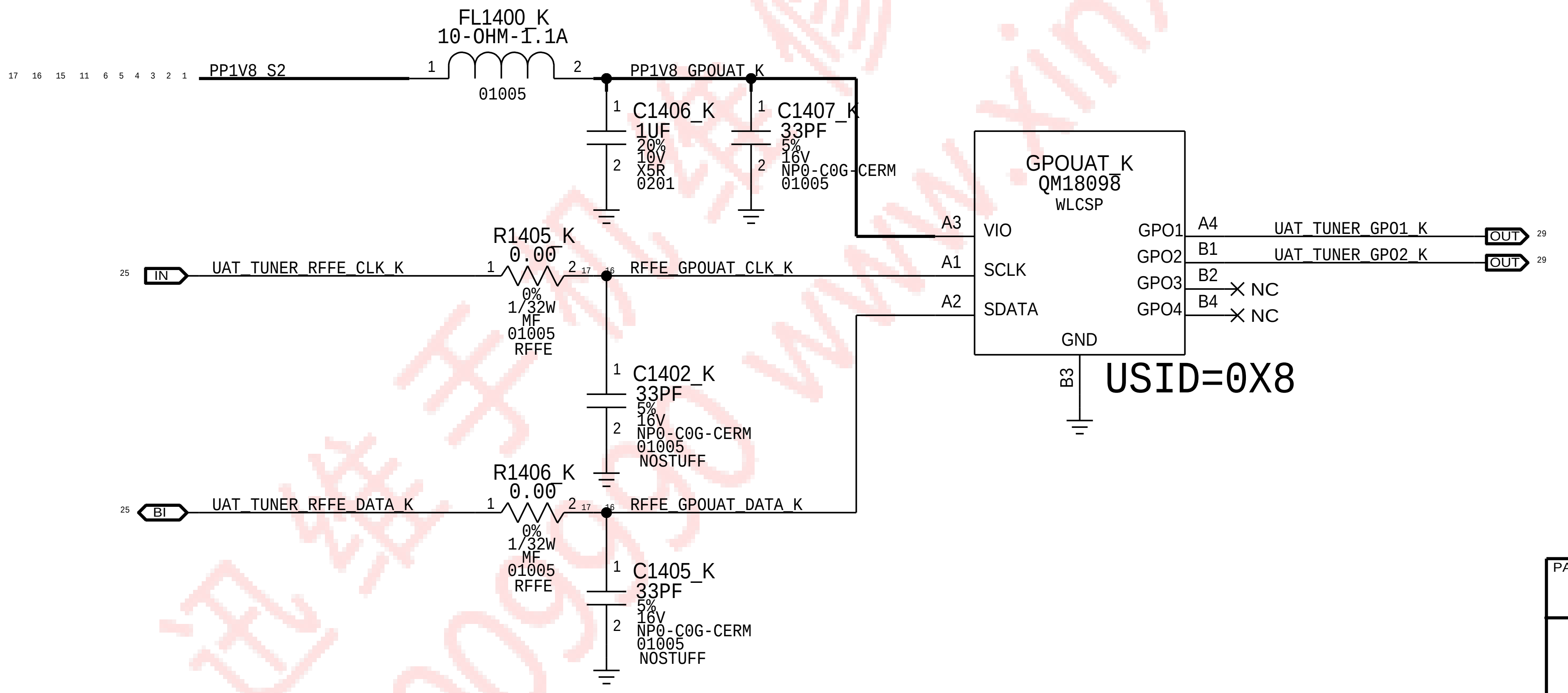
17 16 15 11 6 5 4 3 2 1 PP1V8_S2
FL1400_K
10-OHM-1.1A
01005
PP1V8_GPOUAT_K
C1406_K
1UF
20%
10V
X5R
0201
C1407_K
33PF
5%
16V
NP0-C0G-CERM
01005
GPOUAT_K
QM18098
WLCSP
A3 VIO
A1 SCLK
A2 SDATA
GND
B3
GPO1 A4
GPO2 B1
GPO3 B2
GPO4 B4
NC
NC
USID=0X8
UAT_TUNER_GPO1_K OUT 29
UAT_TUNER_GPO2_K OUT 29
25 IN UAT_TUNER_RFFE_CLK_K
R1405_K
0.00
0%
1/32W
MF
01005
RFFE
RFFE_GPOUAT_CLK_K
C1402_K
33PF
5%
16V
NP0-C0G-CERM
01005
NOSTUFF
25 BI UAT_TUNER_RFFE_DATA_K
R1406_K
0.00
0%
1/32W
MF
01005
RFFE
RFFE_GPOUAT_DATA_K
C1405_K
33PF
5%
16V
NP0-C0G-CERM
01005
NOSTUFF

CONFIDENTIAL AND PROPRIETARY APPLE SYSTEM DESIGN. FOR REFERENCE PURPOSE ONLY - NOT A CHANGE REQUEST

PAGE TITLE
UPPER ANTENNA FEEDS

Apple Inc.

DRAWING NUMBER 051-02247
SIZE D
REVISION 7.0.0
BRANCH evt-1
PAGE 14 OF 17
SHEET 26 OF 34

NOTICE OF PROPRIETARY PROPERTY:

THE INFORMATION CONTAINED HEREIN IS THE PROPRIETARY PROPERTY OF APPLE INC.
THE POSESSOR AGREES TO THE FOLLOWING:

I TO MAINTAIN THIS DOCUMENT IN CONFIDENCE
II NOT TO REPRODUCE OR COPY IT
III NOT TO REVEAL OR PUBLISH IT IN WHOLE OR PART
IV ALL RIGHTS RESERVED

GNSS LNA + RECEIVER

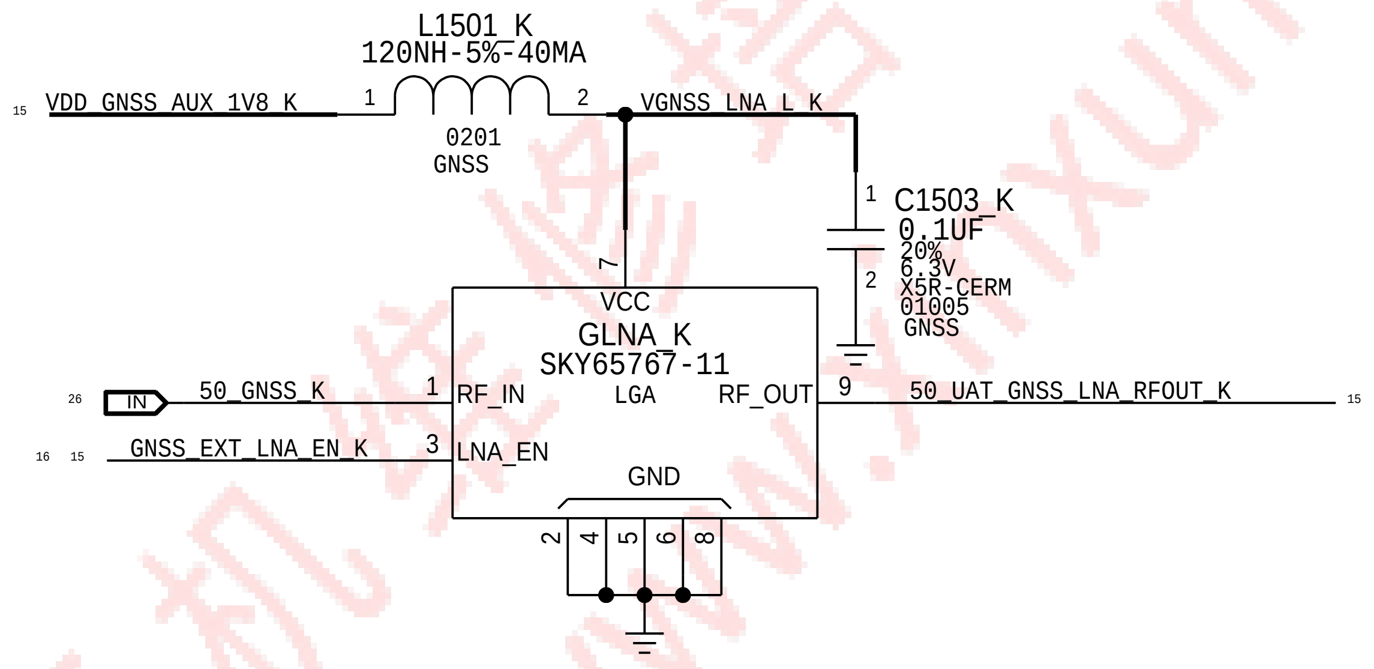
L1501_K
120NH-5%-40MA
15
VDD_GNSS_AUX_1V8_K
1
2
0201
GNSS
VGNSS_LNA_L_K
1
C1503_K
0.1UF
20%
6.3V
X5R-CERM
01005
GNSS
2
7
VCC
GLNA_K
SKY65767-11
LGA
26
IN
50_GNSS_K
1
RF_IN
RF_OUT
9
50_UAT_GNSS_LNA_RFOUT_K
15
16 15
GNSS_EXT_LNA_EN_K
3
LNA_EN
GND
2 4 5 6 8

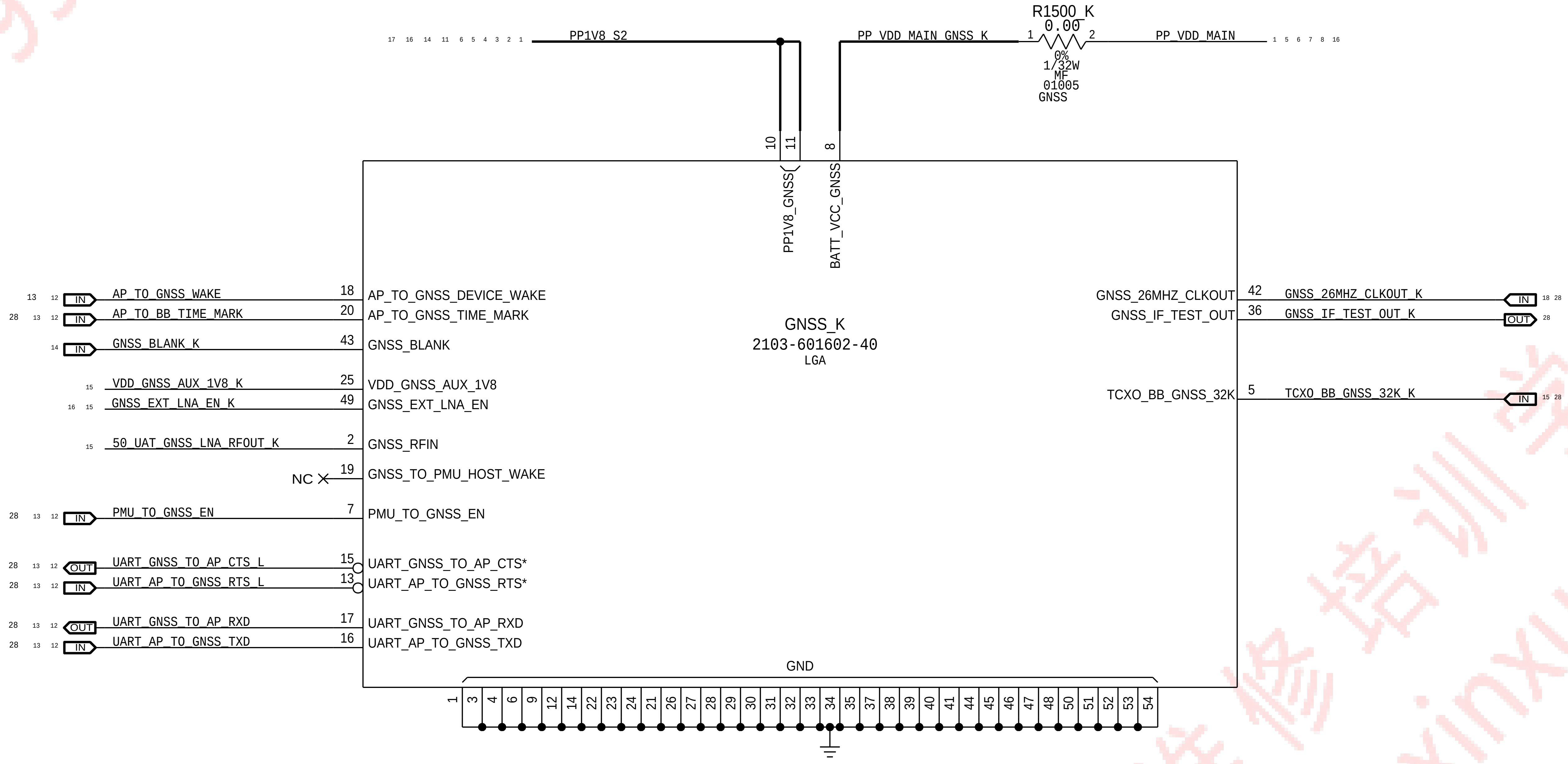
17 16 14 11 6 5 4 3 2 1
PP1V8_S2
PP_VDD_MAIN_GNSS_K
R1500_K
0.00
1
2
0%
1/32W
MF
01005
GNSS
PP_VDD_MAIN
1 5 6 7 8 16
10
11
8
PP1V8_GNSS
BATT_VCC_GNSS
GNSS_K
2103-601602-40
LGA
13 12 IN AP_TO_GNSS_WAKE 18 AP_TO_GNSS_DEVICE_WAKE
28 13 12 IN AP_TO_BB_TIME_MARK 20 AP_TO_GNSS_TIME_MARK
14 IN GNSS_BLANK_K 43 GNSS_BLANK
15 VDD_GNSS_AUX_1V8_K 25 VDD_GNSS_AUX_1V8
16 15 GNSS_EXT_LNA_EN_K 49 GNSS_EXT_LNA_EN
15 50_UAT_GNSS_LNA_RFOUT_K 2 GNSS_RFIN
NC 19 GNSS_TO_PMU_HOST_WAKE
28 13 12 IN PMU_TO_GNSS_EN 7 PMU_TO_GNSS_EN
28 13 12 OUT UART_GNSS_TO_AP_CTS_L 15 UART_GNSS_TO_AP_CTS*
28 13 12 IN UART_AP_TO_GNSS_RTS_L 13 UART_AP_TO_GNSS_RTS*
28 13 12 OUT UART_GNSS_TO_AP_RXD 17 UART_GNSS_TO_AP_RXD
28 13 12 IN UART_AP_TO_GNSS_TXD 16 UART_AP_TO_GNSS_TXD
GNSS_26MHZ_CLKOUT 42 GNSS_26MHZ_CLKOUT_K IN 18 28
GNSS_IF_TEST_OUT 36 GNSS_IF_TEST_OUT_K OUT 28
TCXO_BB_GNSS_32K 5 TCXO_BB_GNSS_32K_K IN 15 28
GND
1 3 4 6 9 12 14 22 23 24 21 26 27 28 29 30 31 32 33 34 35 37 38 39 40 41 44 45 46 47 48 50 51 52 53 54

CONFIDENTIAL AND PROPRIETARY APPLE SYSTEM DESIGN. FOR REFERENCE PURPOSE ONLY - NOT A CHANGE REQUEST

PAGE TITLE
GNSS

Apple Inc.

DRAWING NUMBER 051-02247
SIZE D
REVISION 7.0.0
BRANCH evt-1
PAGE 15 OF 17
SHEET 27 OF 34

NOTICE OF PROPRIETARY PROPERTY:

THE INFORMATION CONTAINED HEREIN IS THE PROPRIETARY PROPERTY OF APPLE INC.
THE POSESSOR AGREES TO THE FOLLOWING:
I TO MAINTAIN THIS DOCUMENT IN CONFIDENCE
II NOT TO REPRODUCE OR COPY IT
III NOT TO REVEAL OR PUBLISH IT IN WHOLE OR PART
IV ALL RIGHTS RESERVED

MLB TEST POINTS

BASEBAND
RFFE
XCVR
ETIC
BBPMU
PCIE
GNSS
DIGRF
BB UART
PCIE GND
SIM CARD CONNECTOR
J_SIM_K
SIMCARD-BEACH-D22
F-RT-SM
SIM_DETECT_SPG
CLK
RESET
VCC
SIM_DETECT
IO
SWP
GND
VDD_SIM1_K
C1601_K
2.2UF
DZ1605_K
12V-33PF
DZ1600_K
5.5V-6.2PF
C1600_K
100PF
DZ1606_K
DZ1607_K
DZ1608_K
DZ1609_K
ESD202-B1-CSP01005
R1613_K
R1614_K
R1615_K
R1616_K
R1617_K
SIM1_IO_K
SIM1_CLK_K
SIM1_RST_K
NFC_SWP1
SIM1_DETECT_K
SIM1_IO_R_K
SIM1_CLK_R_K
SIM1_RST_R_K
SIM1_SWP_R_K
SIM1_DETECT_R_K
PLACE NEAR LBPA/MHBPA
PLACE NEAR XCVR0
PLACE NEAR XCVR1
HARDWARE ID
PP1V8_S2
R1611_K
R1600_K
R1602_K
R1605_K
R1612_K
R1601_K
R1603_K
R1606_K
1.00K
1%
1/32W
MF
01005
BASEBAND
OMIT
BB_HW_ID<0>_K
BB_HW_ID<1>_K
BB_HW_ID<2>_K
BB_HW_ID<3>_K
DEV CONFIG
R1608_K
R1609_K
DEV_HW_CONFIG_K
NOSTUFF
BOOTCFG
R1604_K
R1607_K
R1610_K
HW_MON1_K
HW_MON2_K
PCIE_AP_TO_BB_RESET_L
STUFF FOR VENDOR CONFIG ONLY
DEBUG CONNECTOR
MLB 516S1185
FLEX 516S1184
J_DEBUG_K
20-5857-036-001-829
F-ST-SM
PP_VDD_MAIN
PMU_TO_BB_USB_VBUS_DETECT
PMU_TO_BBPMU_RESET_L
PP1V8_S2
BB_JTAG_TDO_K
BB_JTAG_TDI_K
BB_JTAG_TRST_L_K
AP_TO_BB_RESET_L
BB_JTAG_TCK_K
BB_JTAG_TMS_K
PP_VDD_MAIN
UART_BB_TO_AP_RXD_K
UART_AP_TO_BB_TXD_K
PP_VDD_BOOST
90_USB_BB_DATA_P
90_USB_BB_DATA_N
VDD_SIM1_K
SIM1_RST_R_K
SIM1_CLK_R_K
SIM1_IO_R_K
SIM1_SWP_R_K
SIM1_DETECT_R_K
BB_JTAG_RESET_L
UART_BB_TO_WLAN_COEX
UART_WLAN_TO_BB_COEX
SELECT
NC
NOSTUFF

HARDWARE	HW_ID<3:0>
ICE17.2 RF DEV1	0 0 0 Z
ICE17.2 RF DEV2	0 0 Z 0
RESERVED	0 0 Z Z
RESERVED	0 Z 0 0
RESERVED	0 Z 0 Z

HARDWARE	HW_ID<3:0>
ICE17.2 PROTO1	0 0 0 0
ICE17.2 PROTO2	0 0 0 1
ICE17.2 PROTO3	0 0 1 0
ICE17.2 EVT	0 0 1 1
RESERVED	0 1 0 0

HW_CONFIG	DEV_HW_CONFIG
RESERVED	Z
RESERVED	0
RESERVED	1

	HW_MON1	HW_MON2	TRIG_IN
NAND	0	0	1
FLASHLESS	1	0	1
FLASHLESS WDOG DIS	1	1	0
NAND	1	1	1

BOOTSTRAPS ARE INTERNALLY PULLED DOWN

CONFIDENTIAL AND PROPRIETARY APPLE SYSTEM DESIGN. FOR REFERENCE PURPOSE ONLY - NOT A CHANGE REQUEST

PAGE TITLE
TEST POINTS & SIM

Apple Inc.

DRAWING NUMBER 051-02247
SIZE D
REVISION 7.0.0
BRANCH evt-1
PAGE 16 OF 17
SHEET 28 OF 34

NOTICE OF PROPRIETARY PROPERTY:

THE INFORMATION CONTAINED HEREIN IS THE PROPRIETARY PROPERTY OF APPLE INC.
THE POSESSOR AGREES TO THE FOLLOWING:
I TO MAINTAIN THIS DOCUMENT IN CONFIDENCE
II NOT TO REPRODUCE OR COPY IT
III NOT TO REVEAL OR PUBLISH IT IN WHOLE OR PART
IV ALL RIGHTS RESERVED

RF CONNECTORS AND METROCIRC

LAT MLC

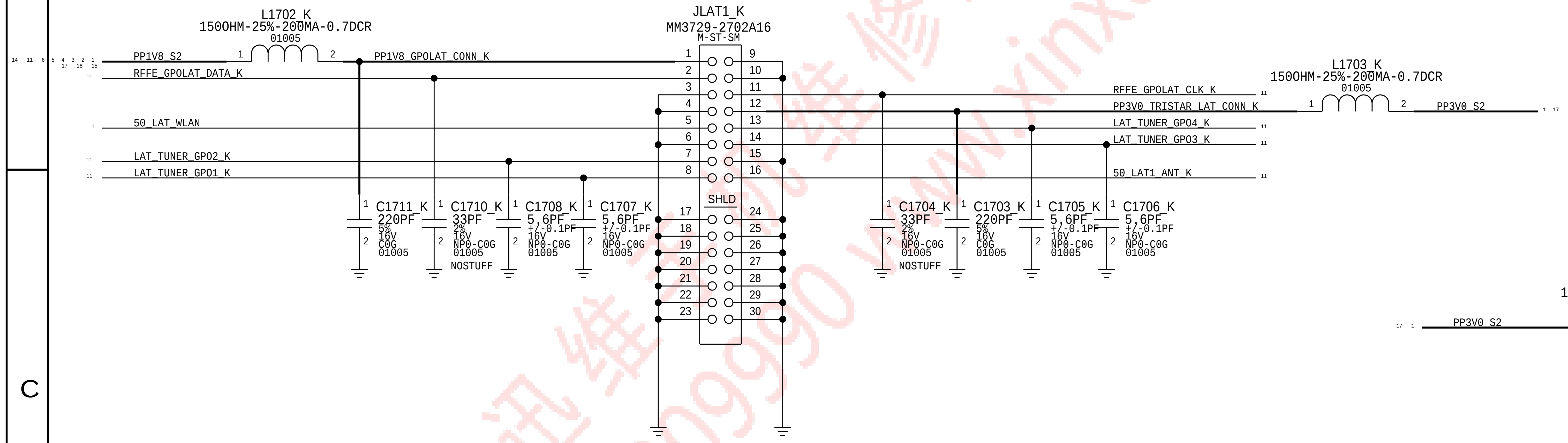
L1702_K
150OHM-25%-200MA-0.7DCR
01005
PP1V8_S2
PP1V8_GPOLAT_CONN_K
RFFE_GPOLAT_DATA_K
50_LAT_WLAN
LAT_TUNER_GPO2_K
LAT_TUNER_GPO1_K
JLAT1_K
MM3729-2702A16
M-ST-SM
SHLD
RFFE_GPOLAT_CLK_K
PP3V0_TRISTAR_LAT_CONN_K
LAT_TUNER_GPO4_K
LAT_TUNER_GPO3_K
50_LAT1_ANT_K
L1703_K
150OHM-25%-200MA-0.7DCR
01005
PP3V0_S2
C1711_K 220PF 5% 16V C0G 01005
C1710_K 33PF 2% 16V NP0-C0G 01005 NOSTUFF
C1708_K 5.6PF +/-0.1PF 16V NP0-C0G 01005
C1707_K 5.6PF +/-0.1PF 16V NP0-C0G 01005
C1704_K 33PF 2% 16V NP0-C0G 01005 NOSTUFF
C1703_K 220PF 5% 16V C0G 01005
C1705_K 5.6PF +/-0.1PF 16V NP0-C0G 01005
C1706_K 5.6PF +/-0.1PF 16V NP0-C0G 01005

UAT1 MLC

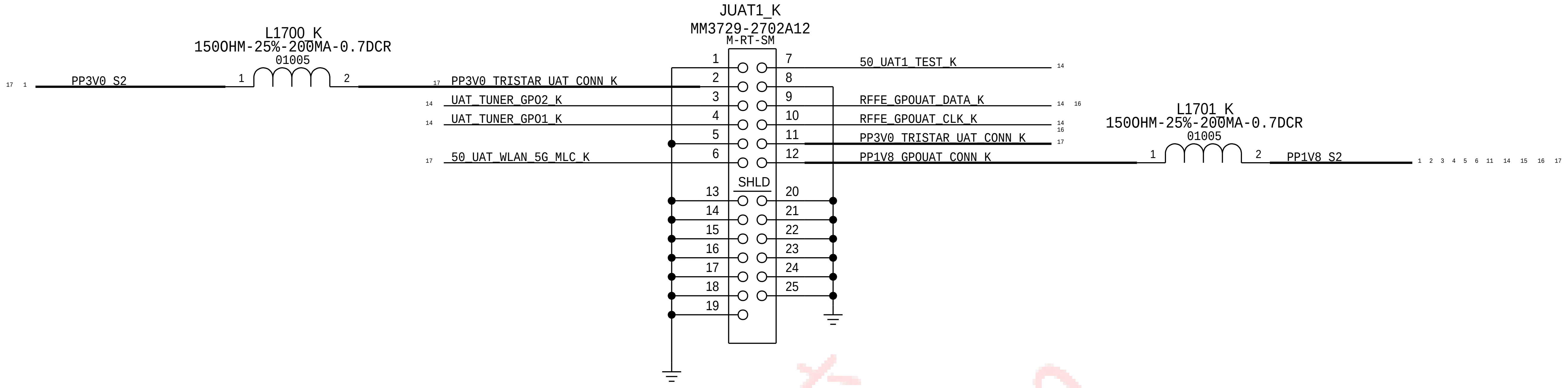
L1700_K
150OHM-25%-200MA-0.7DCR
01005
PP3V0_S2
JUAT1_K
MM3729-2702A12
M-RT-SM
SHLD
PP3V0_TRISTAR_UAT_CONN_K
UAT_TUNER_GPO2_K
UAT_TUNER_GPO1_K
50_UAT_WLAN_5G_MLC_K
50_UAT1_TEST_K
RFFE_GPOUAT_DATA_K
RFFE_GPOUAT_CLK_K
PP3V0_TRISTAR_UAT_CONN_K
PP1V8_GPOUAT_CONN_K
L1701_K
150OHM-25%-200MA-0.7DCR
01005
PP1V8_S2

4-IN-1 METROCIRC CABLE

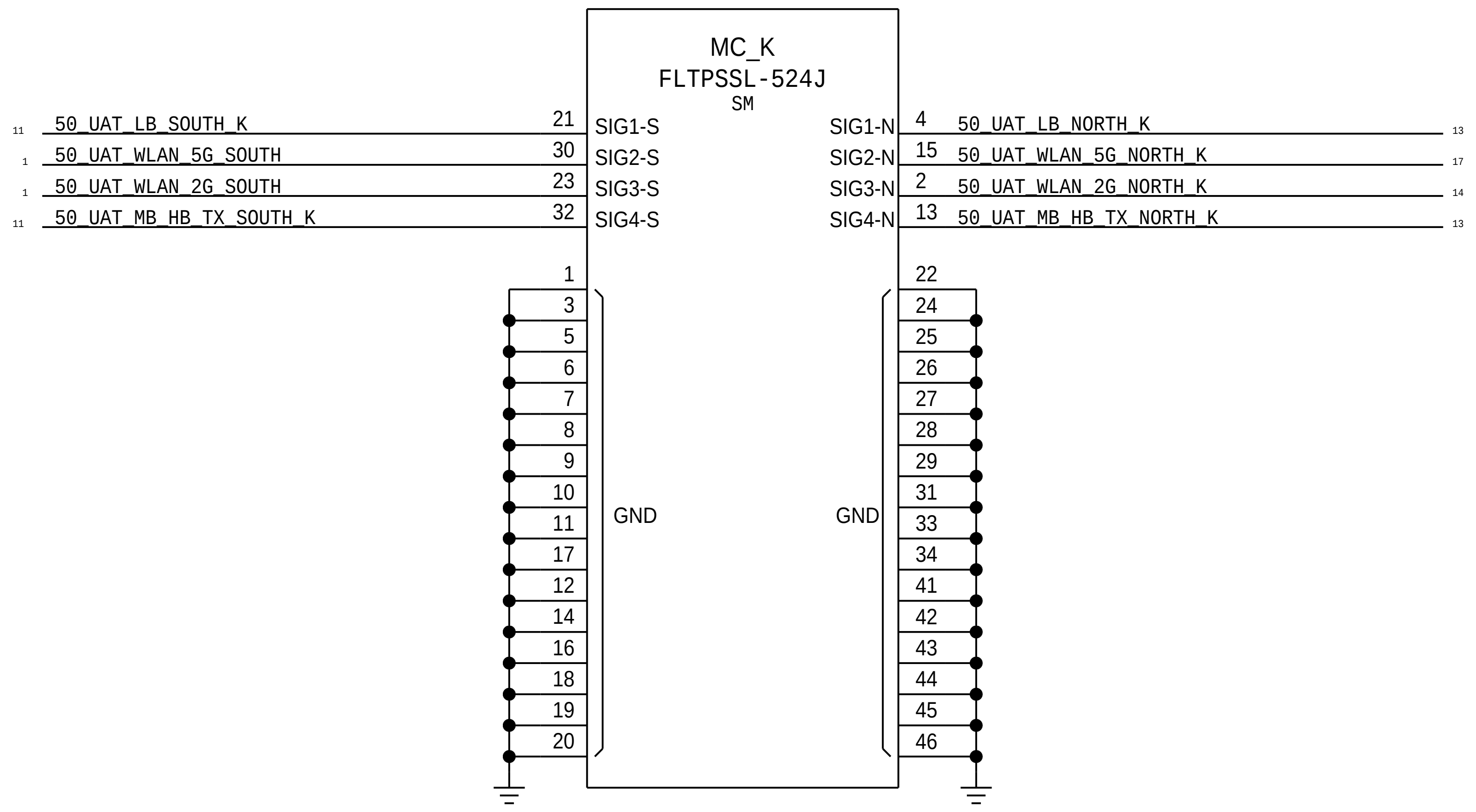
MC_K
FLTPSSL-524J
SM
50_UAT_LB_SOUTH_K
50_UAT_WLAN_5G_SOUTH
50_UAT_WLAN_2G_SOUTH
50_UAT_MB_HB_TX_SOUTH_K
SIG1-S
SIG2-S
SIG3-S
SIG4-S
SIG1-N
SIG2-N
SIG3-N
SIG4-N
50_UAT_LB_NORTH_K
50_UAT_WLAN_5G_NORTH_K
50_UAT_WLAN_2G_NORTH_K
50_UAT_MB_HB_TX_NORTH_K
GND
GND

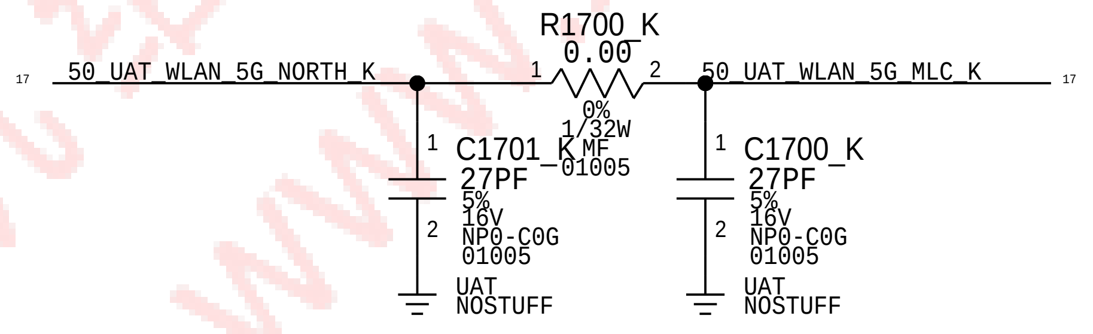
R1700_K
0.00
0%
1/32W
MF
01005
50_UAT_WLAN_5G_NORTH_K
50_UAT_WLAN_5G_MLC_K
C1701_K 27PF 5% 16V NP0-C0G 01005 UAT NOSTUFF
C1700_K 27PF 5% 16V NP0-C0G 01005 UAT NOSTUFF

迅维职业技能培训中心
400-800-9990

REV	ECN	DESCRIPTION OF REVISION	CK APPD	DATE
7	0008448938	ENGINEERING RELEASED		2017-04-11

1. ALL RESISTANCE VALUES ARE IN OHMS, 0.1 WATT +/- 5%.
2. ALL CAPACITANCE VALUES ARE IN MICROFARADS.
3. ALL CRYSTALS & OSCILLATOR VALUES ARE IN HERTZ.

D22/D221 WIFI_MLB (GUINNESS)
APR 03, 2017

PDF PAGE	CSA PAGE	CONTENTS
2	76	GUINNESS
3	77	WIFI FRONT-END

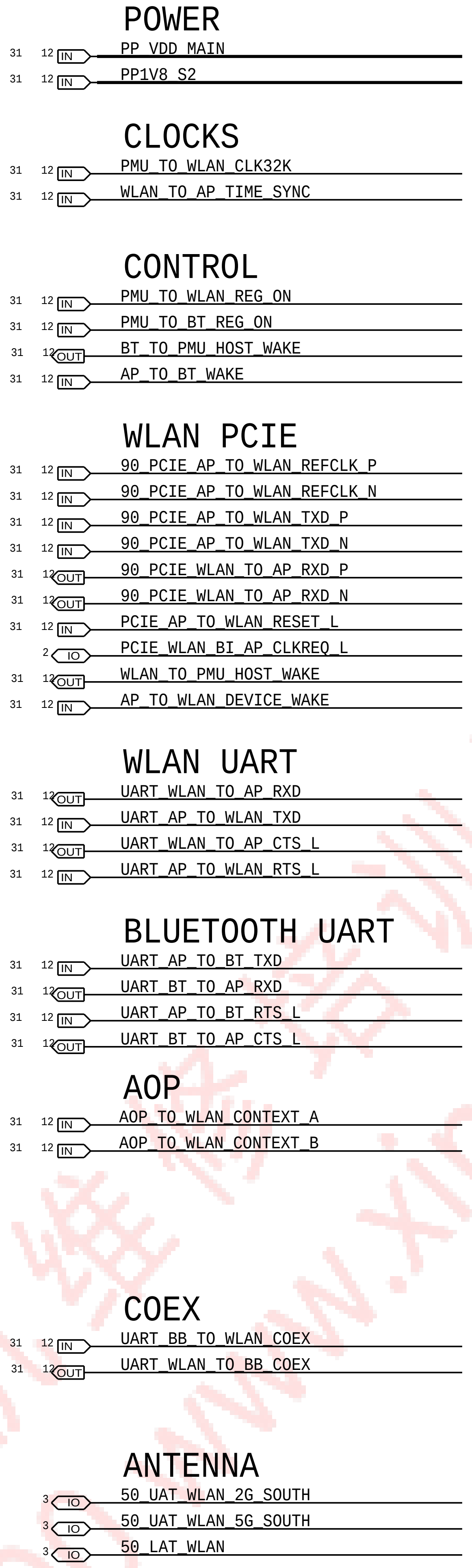
POWER
31 12 IN PP_VDD_MAIN
31 12 IN PP1V8_S2
CLOCKS
31 12 IN PMU_TO_WLAN_CLK32K
31 12 IN WLAN_TO_AP_TIME_SYNC
CONTROL
31 12 IN PMU_TO_WLAN_REG_ON
31 12 IN PMU_TO_BT_REG_ON
31 12 OUT BT_TO_PMU_HOST_WAKE
31 12 IN AP_TO_BT_WAKE
WLAN PCIE
31 12 IN 90_PCIE_AP_TO_WLAN_REFCLK_P
31 12 IN 90_PCIE_AP_TO_WLAN_REFCLK_N
31 12 IN 90_PCIE_AP_TO_WLAN_TXD_P
31 12 IN 90_PCIE_AP_TO_WLAN_TXD_N
31 12 OUT 90_PCIE_WLAN_TO_AP_RXD_P
31 12 OUT 90_PCIE_WLAN_TO_AP_RXD_N
31 12 IN PCIE_AP_TO_WLAN_RESET_L
2 IO PCIE_WLAN_BI_AP_CLKREQ_L
31 12 OUT WLAN_TO_PMU_HOST_WAKE
31 12 IN AP_TO_WLAN_DEVICE_WAKE
WLAN UART
31 12 OUT UART_WLAN_TO_AP_RXD
31 12 IN UART_AP_TO_WLAN_TXD
31 12 OUT UART_WLAN_TO_AP_CTS_L
31 12 IN UART_AP_TO_WLAN_RTS_L
BLUETOOTH UART
31 12 IN UART_AP_TO_BT_TXD
31 12 OUT UART_BT_TO_AP_RXD
31 12 IN UART_AP_TO_BT_RTS_L
31 12 OUT UART_BT_TO_AP_CTS_L
AOP
31 12 IN AOP_TO_WLAN_CONTEXT_A
31 12 IN AOP_TO_WLAN_CONTEXT_B
COEX
31 12 IN UART_BB_TO_WLAN_COEX
31 12 OUT UART_WLAN_TO_BB_COEX
ANTENNA
3 IO 50_UAT_WLAN_2G_SOUTH
3 IO 50_UAT_WLAN_5G_SOUTH
3 IO 50_LAT_WLAN

SymbolPorts

DRAWING TITLE
SCH,MLB,BOT,X893

Apple Inc.

DRAWING NUMBER 051-02247
SIZE D
REVISION 7.0.0
BRANCH evt-1
PAGE 1 OF 5
SHEET 30 OF 34

NOTICE OF PROPRIETARY PROPERTY:
THE INFORMATION CONTAINED HEREIN IS THE PROPRIETARY PROPERTY OF APPLE INC.
THE POSESSOR AGREES TO THE FOLLOWING:
I TO MAINTAIN THIS DOCUMENT IN CONFIDENCE
II NOT TO REPRODUCE OR COPY IT
III NOT TO REVEAL OR PUBLISH IT IN WHOLE OR PART
IV ALL RIGHTS RESERVED

CONFIDENTIAL AND PROPRIETARY APPLE SYSTEM DESIGN. FOR REFERENCE PURPOSE ONLY - NOT A CHANGE REQUEST

WIFI/BT

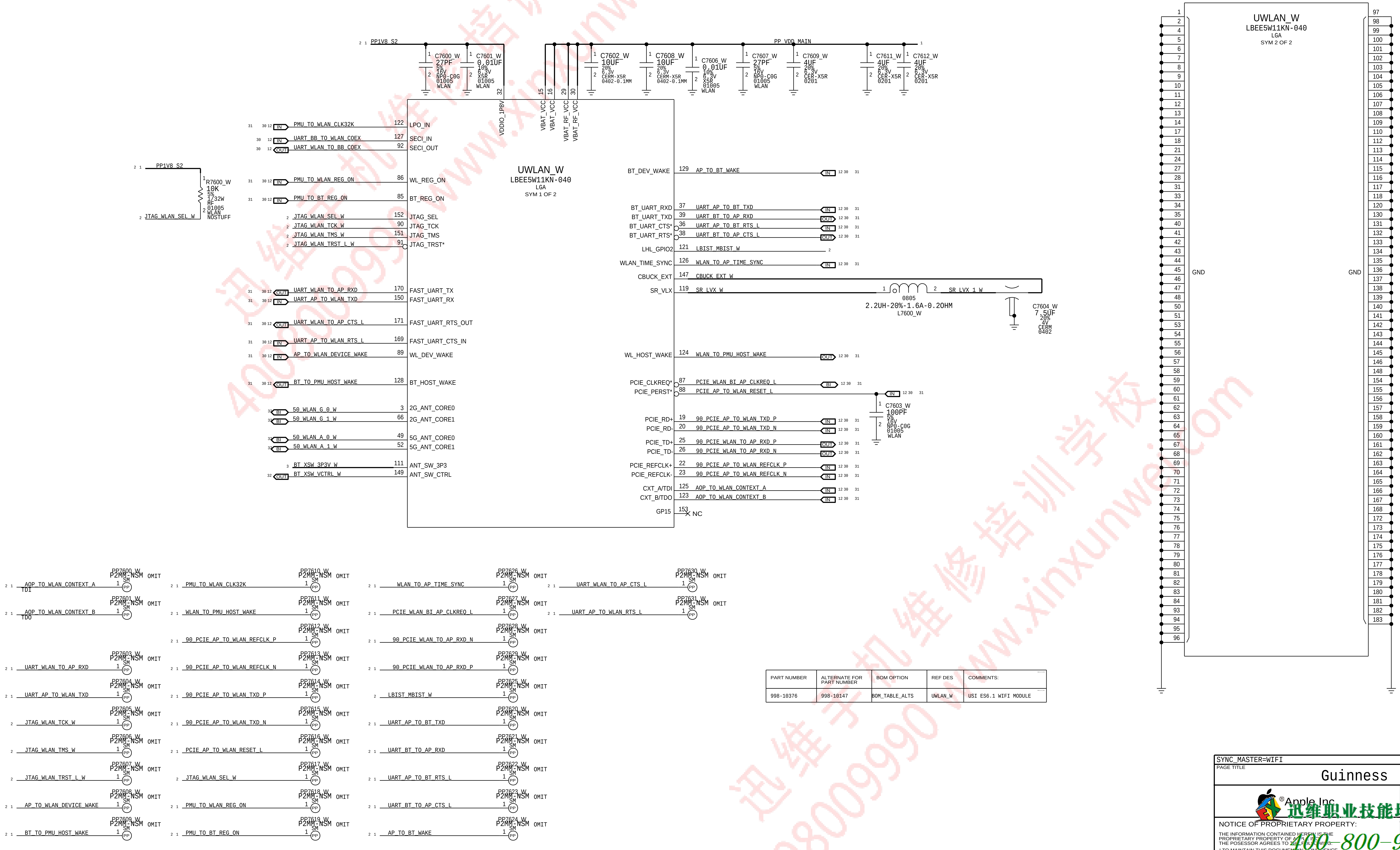
PP1V8_S2
PP_VDD_MAIN
C7600_W 27PF 5% 16V NP0-C0G 01005 WLAN
C7601_W 0.01UF 10% 6.3V X5R 01005 WLAN
C7602_W 10UF 20% 6.3V CERM-X5R 0402-0.1MM
C7608_W 10UF 20% 6.3V CERM-X5R 0402-0.1MM
C7606_W 0.01UF 10% 6.3V X5R 01005 WLAN
C7607_W 27PF 5% 16V NP0-C0G 01005 WLAN
C7609_W 4UF 20% 6.3V CER-X5R 0201
C7611_W 4UF 20% 6.3V CER-X5R 0201
C7612_W 4UF 20% 6.3V CER-X5R 0201
VDDIO_1P8V
VBAT_VCC
VBAT_VCC
VBAT_RF_VCC
VBAT_RF_VCC
UWLAN_W
LBEE5W11KN-040
LGA
SYM 1 OF 2
R7600_W 10K 5% 1/32W MF 01005 WLAN NOSTUFF
JTAG_WLAN_SEL_W
PMU_TO_WLAN_CLK32K 122 LPO_IN
UART_BB_TO_WLAN_COEX 127 SECI_IN
UART_WLAN_TO_BB_COEX 92 SECI_OUT
PMU_TO_WLAN_REG_ON 86 WL_REG_ON
PMU_TO_BT_REG_ON 85 BT_REG_ON
JTAG_WLAN_SEL_W 152 JTAG_SEL
JTAG_WLAN_TCK_W 90 JTAG_TCK
JTAG_WLAN_TMS_W 151 JTAG_TMS
JTAG_WLAN_TRST_L_W 91 JTAG_TRST*
UART_WLAN_TO_AP_RXD 170 FAST_UART_TX
UART_AP_TO_WLAN_TXD 150 FAST_UART_RX
UART_WLAN_TO_AP_CTS_L 171 FAST_UART_RTS_OUT
UART_AP_TO_WLAN_RTS_L 169 FAST_UART_CTS_IN
AP_TO_WLAN_DEVICE_WAKE 89 WL_DEV_WAKE
BT_TO_PMU_HOST_WAKE 128 BT_HOST_WAKE
50_WLAN_G_0_W 3 2G_ANT_CORE0
50_WLAN_G_1_W 66 2G_ANT_CORE1
50_WLAN_A_0_W 49 5G_ANT_CORE0
50_WLAN_A_1_W 52 5G_ANT_CORE1
BT_XSW_3P3V_W 111 ANT_SW_3P3
BT_XSW_VCTRL_W 149 ANT_SW_CTRL
BT_DEV_WAKE 129 AP_TO_BT_WAKE
BT_UART_RXD 37 UART_AP_TO_BT_TXD
BT_UART_TXD 39 UART_BT_TO_AP_RXD
BT_UART_CTS* 36 UART_AP_TO_BT_RTS_L
BT_UART_RTS* 38 UART_BT_TO_AP_CTS_L
LHL_GPIO2 121 LBIST_MBIST_W
WLAN_TIME_SYNC 126 WLAN_TO_AP_TIME_SYNC
CBUCK_EXT 147 CBUCK_EXT_W
SR_VLX 119 SR_LVX_W
0805 2.2UH-20%-1.6A-0.2OHM L7600_W
SR_LVX_1_W
C7604_W 7.5UF 20% 4V CERM 0402
WL_HOST_WAKE 124 WLAN_TO_PMU_HOST_WAKE
PCIE_CLKREQ* 87 PCIE_WLAN_BI_AP_CLKREQ_L
PCIE_PERST* 88 PCIE_AP_TO_WLAN_RESET_L
C7603_W 100PF 5% 16V NP0-C0G 01005 WLAN
PCIE_RD+ 19 90_PCIE_AP_TO_WLAN_TXD_P
PCIE_RD- 20 90_PCIE_AP_TO_WLAN_TXD_N
PCIE_TD+ 25 90_PCIE_WLAN_TO_AP_RXD_P
PCIE_TD- 26 90_PCIE_WLAN_TO_AP_RXD_N
PCIE_REFCLK+ 22 90_PCIE_AP_TO_WLAN_REFCLK_P
PCIE_REFCLK- 23 90_PCIE_AP_TO_WLAN_REFCLK_N
CXT_A/TDI 125 AOP_TO_WLAN_CONTEXT_A
CXT_B/TDO 123 AOP_TO_WLAN_CONTEXT_B
GP15 153 NC
UWLAN_W
LBEE5W11KN-040
LGA
SYM 2 OF 2
GND
GND
PP7600_W P2MM-NSM SM OMIT AOP_TO_WLAN_CONTEXT_A TDI
PP7601_W P2MM-NSM SM OMIT AOP_TO_WLAN_CONTEXT_B TDO
PP7603_W P2MM-NSM SM OMIT UART_WLAN_TO_AP_RXD
PP7604_W P2MM-NSM SM OMIT UART_AP_TO_WLAN_TXD
PP7605_W P2MM-NSM SM OMIT JTAG_WLAN_TCK_W
PP7606_W P2MM-NSM SM OMIT JTAG_WLAN_TMS_W
PP7607_W P2MM-NSM SM OMIT JTAG_WLAN_TRST_L_W
PP7608_W P2MM-NSM SM OMIT AP_TO_WLAN_DEVICE_WAKE
PP7609_W P2MM-NSM SM OMIT BT_TO_PMU_HOST_WAKE
PP7610_W P2MM-NSM SM OMIT PMU_TO_WLAN_CLK32K
PP7611_W P2MM-NSM SM OMIT WLAN_TO_PMU_HOST_WAKE
PP7612_W P2MM-NSM SM OMIT 90_PCIE_AP_TO_WLAN_REFCLK_P
PP7613_W P2MM-NSM SM OMIT 90_PCIE_AP_TO_WLAN_REFCLK_N
PP7614_W P2MM-NSM SM OMIT 90_PCIE_AP_TO_WLAN_TXD_P
PP7615_W P2MM-NSM SM OMIT 90_PCIE_AP_TO_WLAN_TXD_N
PP7616_W P2MM-NSM SM OMIT PCIE_AP_TO_WLAN_RESET_L
PP7617_W P2MM-NSM SM OMIT JTAG_WLAN_SEL_W
PP7618_W P2MM-NSM SM OMIT PMU_TO_WLAN_REG_ON
PP7619_W P2MM-NSM SM OMIT PMU_TO_BT_REG_ON
PP7626_W P2MM-NSM SM OMIT WLAN_TO_AP_TIME_SYNC
PP7627_W P2MM-NSM SM OMIT PCIE_WLAN_BI_AP_CLKREQ_L
PP7628_W P2MM-NSM SM OMIT 90_PCIE_WLAN_TO_AP_RXD_N
PP7629_W P2MM-NSM SM OMIT 90_PCIE_WLAN_TO_AP_RXD_P
PP7625_W P2MM-NSM SM OMIT LBIST_MBIST_W
PP7620_W P2MM-NSM SM OMIT UART_AP_TO_BT_TXD
PP7621_W P2MM-NSM SM OMIT UART_BT_TO_AP_RXD
PP7622_W P2MM-NSM SM OMIT UART_AP_TO_BT_RTS_L
PP7623_W P2MM-NSM SM OMIT UART_BT_TO_AP_CTS_L
PP7624_W P2MM-NSM SM OMIT AP_TO_BT_WAKE
PP7630_W P2MM-NSM SM OMIT UART_WLAN_TO_AP_CTS_L
PP7631_W P2MM-NSM SM OMIT UART_AP_TO_WLAN_RTS_L

PART NUMBER	ALTERNATE FOR PART NUMBER	BOM OPTION	REF DES	COMMENTS:
998-10376	998-10147	BOM_TABLE_ALTS	UWLAN_W	USI ES6.1 WIFI MODULE

SYNC_MASTER=WIFI SYNC_DATE=01/30/2014

PAGE TITLE

Guinness

DRAWING NUMBER 051-02247 SIZE D

Apple Inc.

REVISION 7.0.0

NOTICE OF PROPRIETARY PROPERTY:

THE INFORMATION CONTAINED HEREIN IS THE PROPRIETARY PROPERTY OF APPLE INC. THE POSESSOR AGREES TO THE FOLLOWING:

I TO MAINTAIN THIS DOCUMENT IN CONFIDENCE
II NOT TO REPRODUCE OR COPY IT
III NOT TO REVEAL OR PUBLISH IT IN WHOLE OR PART
IV ALL RIGHTS RESERVED

BRANCH evt-1

PAGE 4 OF 5

SHEET 31 OF 34

WIFI LOWER ANTENNA FEED

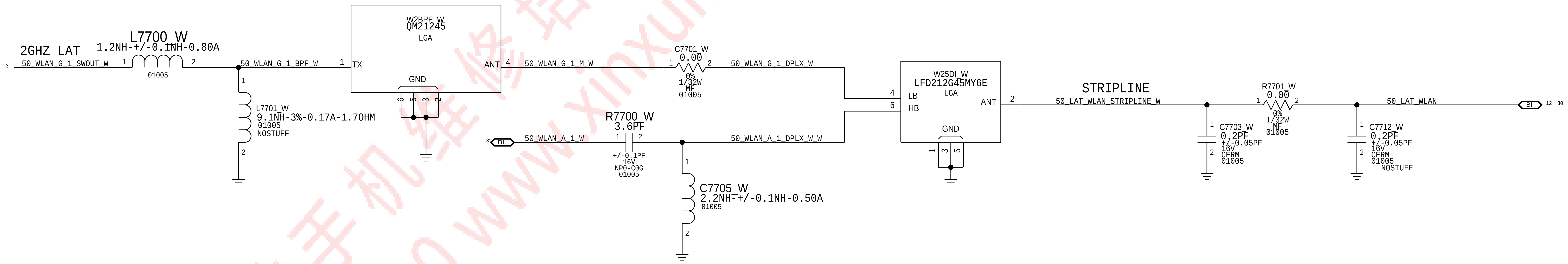
2GHZ LAT
50_WLAN_G_1_SWOUT_W
L7700_W
1.2NH-+/-0.1NH-0.80A
01005
50_WLAN_G_1_BPF_W
L7701_W
9.1NH-3%-0.17A-1.7OHM
01005
NOSTUFF
W2BPF_W
QM21245
LGA
TX
ANT
GND
50_WLAN_G_1_M_W
C7701_W
0.00
0%
1/32W
MF
01005
50_WLAN_G_1_DPLX_W
BI
50_WLAN_A_1_W
R7700_W
3.6PF
+/-0.1PF
16V
NP0-C0G
01005
50_WLAN_A_1_DPLX_W_W
C7705_W
2.2NH-+/-0.1NH-0.50A
01005
W25DI_W
LFD212G45MY6E
LGA
LB
HB
ANT
GND
STRIPLINE
50_LAT_WLAN_STRIPLINE_W
C7703_W
0.2PF
+/-0.05PF
16V
CERM
01005
R7701_W
0.00
0%
1/32W
MF
01005
50_LAT_WLAN
C7712_W
0.2PF
+/-0.05PF
16V
CERM
01005
NOSTUFF
BI

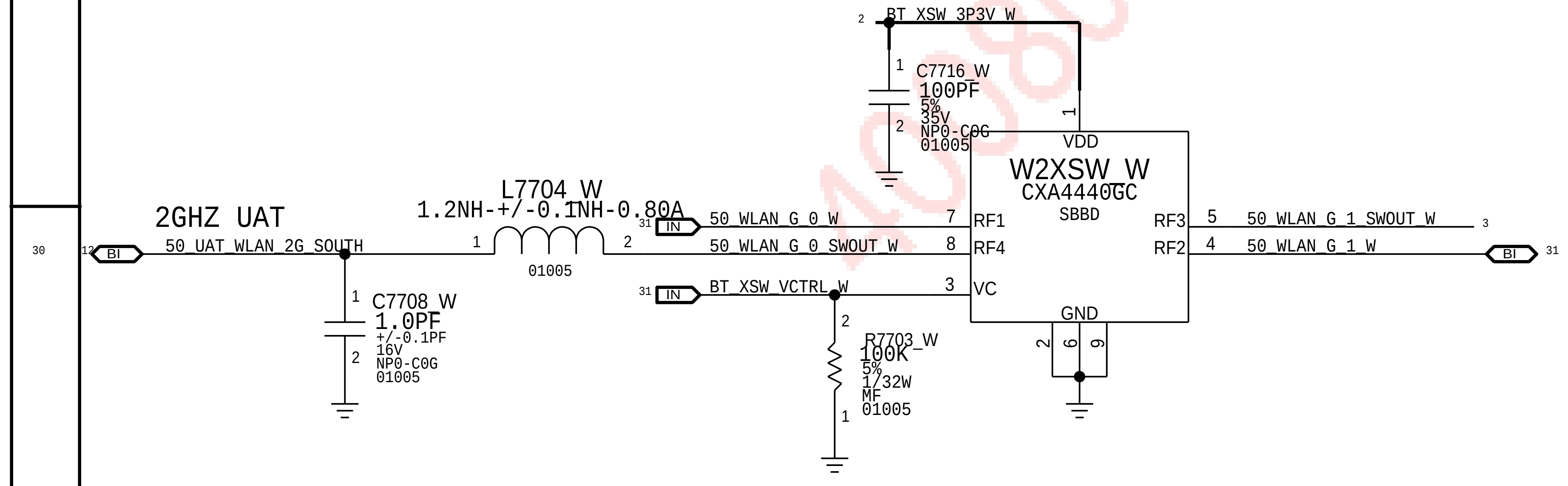
BT_XSW_3P3V_W
C7716_W
100PF
5%
35V
NP0-C0G
01005
VDD
W2XSW_W
CXA4440GC
SBBD
2GHZ UAT
BI
50_UAT_WLAN_2G_SOUTH
L7704_W
1.2NH-+/-0.1NH-0.80A
01005
C7708_W
1.0PF
+/-0.1PF
16V
NP0-C0G
01005
IN
50_WLAN_G_0_W
50_WLAN_G_0_SWOUT_W
IN
BT_XSW_VCTRL_W
R7703_W
100K
5%
1/32W
MF
01005
RF1
RF4
VC
GND
RF3
RF2
50_WLAN_G_1_SWOUT_W
50_WLAN_G_1_W
BI

5GHZ WIFI UPPER ANTENNA FEED

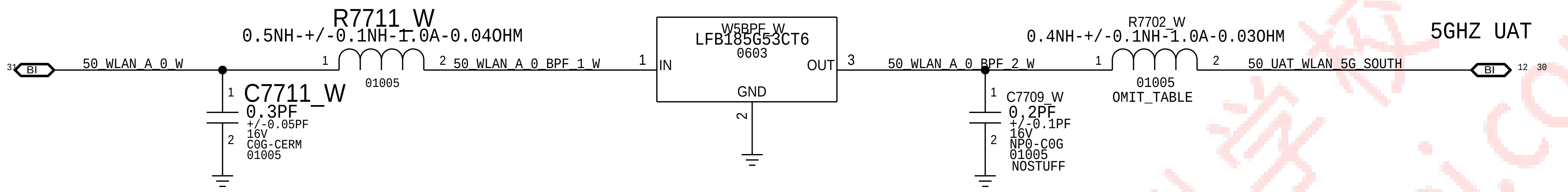
BI
50_WLAN_A_0_W
C7711_W
0.3PF
+/-0.05PF
16V
C0G-CERM
01005
R7711_W
0.5NH-+/-0.1NH-1.0A-0.04OHM
01005
50_WLAN_A_0_BPF_1_W
W5BPF_W
LFB185G53CT6
0603
IN
OUT
GND
50_WLAN_A_0_BPF_2_W
C7709_W
0.2PF
+/-0.1PF
16V
NP0-C0G
01005
NOSTUFF
R7702_W
0.4NH-+/-0.1NH-1.0A-0.03OHM
01005
OMIT_TABLE
5GHZ UAT
50_UAT_WLAN_5G_SOUTH
BI

PART#	QTY	DESCRIPTION	REFERENCE DESIGNATOR(S)	CRITICAL	BOM OPTION
117S0161	1	5GHZ C0 BPF OUTPUT MATCH	R7702_W	CRITICAL	D221
152S00498	1	5GHZ C0 BPF OUTPUT MATCH	R7702_W	CRITICAL	ROW
152S00498	1	5GHZ C0 BPF OUTPUT MATCH	R7702_W	CRITICAL	JPN

PAGE TITLE
WiFiANTFeeds

Apple Inc.

DRAWING NUMBER 051-02247
SIZE D
REVISION 7.00
BRANCH evt-1
PAGE 5 OF 5
SHEET 32 OF 34

NOTICE OF PROPRIETARY PROPERTY:

THE INFORMATION CONTAINED HEREIN IS THE
PROPRIETARY PROPERTY OF APPLE INC.
THE POSESSOR AGREES TO THE FOLLOWING:

I TO MAINTAIN THIS DOCUMENT IN CONFIDENCE
II NOT TO REPRODUCE OR COPY IT
III NOT TO REVEAL OR PUBLISH IT IN WHOLE OR PART
IV ALL RIGHTS RESERVED

1. ALL RESISTANCE VALUES ARE IN OHMS, 0.1 WATT +/- 5%.
2. ALL CAPACITANCE VALUES ARE IN MICROFARADS.
3. ALL CRYSTALS & OSCILLATOR VALUES ARE IN HERTZ.

REV	ECN	DESCRIPTION OF REVISION	CK APPD	DATE
7	0008448938	ENGINEERING RELEASED		2017-04-11

D

D22 NFC_MLB
MARCH 22, 2017

C

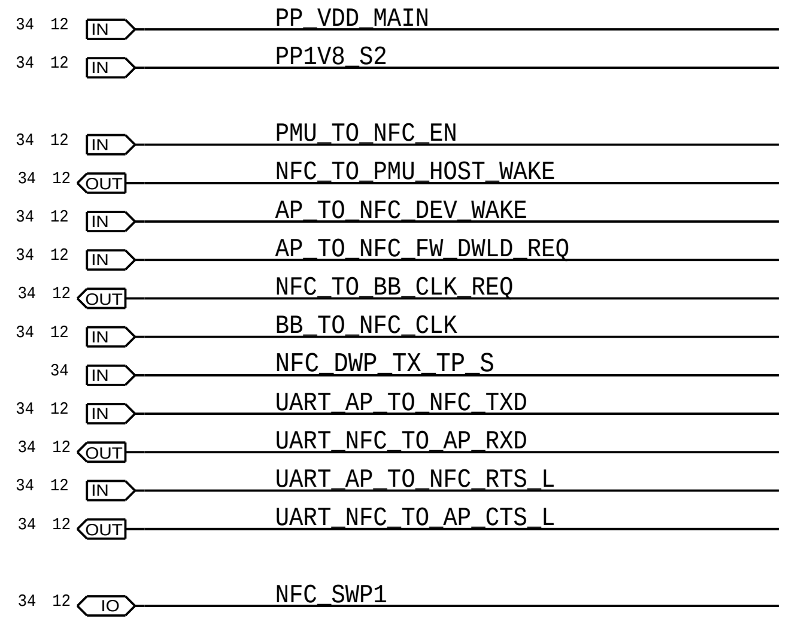
34 12 IN PP_VDD_MAIN
34 12 IN PP1V8_S2
34 12 IN PMU_TO_NFC_EN
34 12 OUT NFC_TO_PMU_HOST_WAKE
34 12 IN AP_TO_NFC_DEV_WAKE
34 12 IN AP_TO_NFC_FW_DWLD_REQ
34 12 OUT NFC_TO_BB_CLK_REQ
34 12 IN BB_TO_NFC_CLK
34 IN NFC_DWP_TX_TP_S
34 12 IN UART_AP_TO_NFC_TXD
34 12 OUT UART_NFC_TO_AP_RXD
34 12 IN UART_AP_TO_NFC_RTS_L
34 12 OUT UART_NFC_TO_AP_CTS_L
34 12 IO NFC_SWP1

B

PART#	QTY	DESCRIPTION	REFERENCE DESIGNATOR(S)	CRITICAL	BOM OPTION
138S00159	3	CAP,SOFT-TERM,2.2UF,6.3V,0201	C7500_S,C7502_S,C7505_S	CRITICAL	SOFT_CAP
138S0831	3	CAP,TYPICAL,2.2UF,6.3V,0201	C7500_S,C7502_S,C7505_S	CRITICAL	TYPICAL_CAP

A

page1

DRAWING TITLE
SCH,MLB,BOT,X893

Apple Inc.

DRAWING NUMBER
051-02247

SIZE
D

REVISION
[illegible].0.0

NOTICE OF PROPRIETARY PROPERTY:

THE INFORMATION CONTAINED HEREIN IS THE PROPRIETARY PROPERTY OF APPLE INC.
THE POSESSOR AGREES TO THE FOLLOWING:
I TO MAINTAIN THIS DOCUMENT IN CONFIDENCE
II NOT TO REPRODUCE OR COPY IT
III NOT TO REVEAL OR PUBLISH IT IN WHOLE OR PART
IV ALL RIGHTS RESERVED

BRANCH
evt-1

PAGE
1 OF 75

SHEET
33 OF 34

STOCKHOLM

NFC CONTROLLER

5V BOOSTER

NFC FRONT END

NFC_S
PN80VEU3-C003B007
UFLGA
VDD_NFC_5V_S
PP1V8_S2
PP_VDD_MAIN
R7502_S 0.00 1% 1/32W MF 01005 NFC
VDD_NFC_AVDD_S
VDD_NFC_DVDD_S
VDD_NFC_TVDD_S
VDD_NFC_AVDD_S VOLTAGE=1.80V
VDD_NFC_ESE_S VOLTAGE=1.80V
C7500_S 2.2UF 20% 6.3V X5R-CERM 0201 NFC OMIT_TABLE
C7502_S 2.2UF 20% 6.3V X5R-CERM 0201 NFC OMIT_TABLE
C7504_S 0.22UF 20% 6.3V X5R 01005 NFC
C7505_S 2.2UF 20% 6.3V X5R-CERM 0201 NFC OMIT_TABLE
C7506_S 2.2UF 20% 6.3V X5R-CERM 0201
C7526_S 2.2UF 20% 6.3V X5R-CERM 0201
VDD VBAT SIM_PMU_VCC_1 SIM_PMU_VCC_2 PVDD VUP TVDD AVDD SVDD ESE_VDD GPIOVDD SIM_VCC1 SIM_VCC2
IRQ DWL CLK_REQ NFC_CLK_XTAL1 UART_RX UART_TX UART_CTS UART_RTS VEN
IC0 IC1 IC2 IC3 IC4 IC5 IC6 IC7 IC8 IC9 IC10 IC11 IC12 IC13 IC14
AVSS AVSS AVSS DVSS TVSS PVSS ESE_VSS
NFC_TO_PMU_HOST_WAKE
AP_TO_NFC_FW_DWLD_REQ
NFC_TO_BB_CLK_REQ
BB_TO_NFC_CLK
UART_AP_TO_NFC_TXD
UART_NFC_TO_AP_RXD
UART_AP_TO_NFC_RTS_L
UART_NFC_TO_AP_CTS_L
PMU_TO_NFC_EN
NFC_DWP_RX_TP_S
PP7513_S P2MM-NSM SM OMIT
PP7512_S P2MM-NSM SM OMIT
SIM_SWIO_1 SIM_SWIO_2 ESE_GPIO TX_PWR_REQ_P ESE_DWPM_DBG ESE_DWPS_DBG RX+ RX- TX1 TX2 WKUP_REQ VMID
NFC_GPIO0 NFC_GPIO1 NFC_GPIO2 NFC_GPIO3 NFC_GPIO4 NFC_GPIO5 NFC_GPIO6 XTAL2
NFC_SWP1
NFC_BOOST_EN_S
NFC_RXP_S NFC_RXN_S NFC_TXP_S NFC_TXN_S
AP_TO_NFC_DEV_WAKE
NFC_TEST_OUT_S NFC_ADC_I_TEST_S NFC_DWP_TX_TP_S NFC_TUNE_B0_S NFC_TUNE_B1_S NFC_TUNE_B2_S NFC_TUNE_B3_S
C7503_S 0.1UF 20% 6.3V X5R-CERM 01005 NFC
PP7511_S P2MM-NSM SM OMIT
NC
L7502_S 0.47UH-20%-2.52A-0.080OHM PIGA1608-SM
NFC_BOOST_SW_S
NFC_DCDC_S FAN48680UC07X WLCSP
SW SW PVIN VOUT VOUT MODE0 MODE1 PGND
NFC_DCDC_OUT_S
L7503_S 100OHM-50%-1A-0.050OHM 0201
VDD_NFC_5V_S
C7521_S 100PF 5% 16V NP0-C0G 01005 NFC
C7511_S 15UF 20% 6.3V X5R 0402-0.1MM-1 NFC
C7517_S 15UF 20% 6.3V X5R 0402-0.1MM-1 NFC
C7522_S 100PF 5% 16V NP0-C0G 01005 NFC
C7520_S 2.2UF 20% 6.3V X5R-CERM 0201 NFC
C7523_S 2.2UF 20% 6.3V X5R-CERM 0201 NFC
C7507_S 1000PF 2% 25V C0G-NP0 0201 NFC
NFC_RXP_CAP_S
R7508_S 1K 1% 1/20W MF 201 NFC
L7500_S 77NH-5%-1.1A-0.090OHM 0402 NFC
L7501_S 77NH-5%-1.1A-0.090OHM 0402 NFC
NFC_BAL1_S NFC_BAL2_S
C7510_S 1000PF 2% 25V C0G-NP0 0201 NFC
C7513_S 1000PF 2% 25V C0G-NP0 0201 NFC
T7500_S ATB1210006F-20011-T11 SM
GND PORT3 PORT1 PORT2
NFC_ANT_MATCH_S
C7514_S 560PF 2% 25V NP0-C0G 0201
C7512_S 100PF 2% 50V C0G 0201
NFC_ANT_S
C7515_S 1000PF 2% 25V C0G-NP0 0201 NFC
C7516_S 1000PF 2% 25V C0G-NP0 0201 NFC
C7518_S 330PF 2% 25V NP0-C0G 0201
NOSTUFF
C7530_S 18PF 2% 16V CERM 01005
C7531_S 39PF 5% 16V NP0-C0G 01005
C7532_S 82PF 5% 25V C0G 01005
C7533_S 150PF 5% 25V C0G 01005
NFC_FETB0_S NFC_FETB1_S NFC_FETB2_S NFC_FETB3_S
XLLGA NTND3184NZTAG
Q7501_S Q7502_S
NFC_TUNE_B0_S NFC_TUNE_B1_S NFC_TUNE_B2_S NFC_TUNE_B3_S
PP7503_S PP7504_S PP7505_S PP7506_S PP7507_S PP7508_S PP7509_S PP7510_S PP7514_S P2MM-NSM SM OMIT
TP7505_S TP7506_S TP-P55 NFC OMIT
UART_AP_TO_NFC_TXD UART_NFC_TO_AP_RXD UART_AP_TO_NFC_RTS_L UART_NFC_TO_AP_CTS_L
NFC_TO_PMU_HOST_WAKE PMU_TO_NFC_EN AP_TO_NFC_DEV_WAKE AP_TO_NFC_FW_DWLD_REQ
NFC_TEST_OUT_S NFC_ADC_I_TEST_S VDD_NFC_5V_S

PAGE TITLE
NFC

DRAWING NUMBER 051-02247
SIZE D

Apple Inc.

REVISION 7.0.0

NOTICE OF PROPRIETARY PROPERTY:

THE INFORMATION CONTAINED HEREIN IS THE PROPRIETARY PROPERTY OF APPLE INC. THE POSESSOR AGREES TO THE FOLLOWING:
I TO MAINTAIN THIS DOCUMENT IN CONFIDENCE
II NOT TO REPRODUCE OR COPY IT
III NOT TO REVEAL OR PUBLISH IT IN WHOLE OR PART
IV ALL RIGHTS RESERVED

BRANCH evt-1

PAGE 75 OF 75

SHEET 34 OF 34