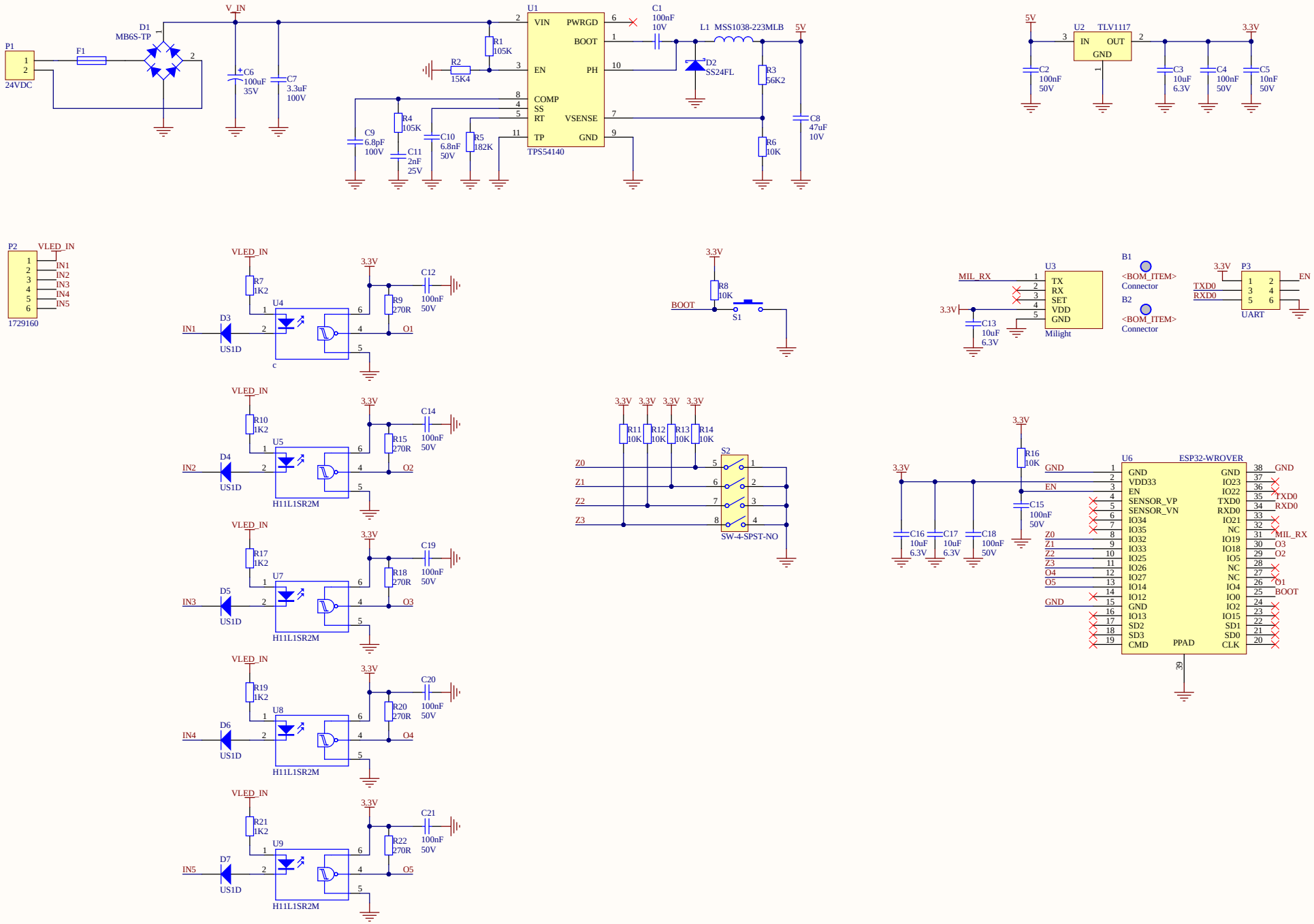
P1
24VDC
F1
D1
MB6S-TP
V_IN
C6
100uF
35V
C7
3.3uF
100V
U1
TPS54140
VIN
PWRGD
BOOT
EN
PH
COMP
SS
RT
VSENSE
TP
GND
R1
105K
R2
15K4
R3
56K2
R4
105K
R5
182K
R6
10K
C1
100nF
10V
L1 MSS1038-223MLB
D2
SS24FL
C8
47uF
10V
C9
6.8pF
100V
C10
6.8nF
50V
C11
2nF
25V
5V
U2 TLV1117
IN
OUT
GND
3.3V
C2
100nF
50V
C3
10uF
6.3V
C4
100nF
50V
C5
10nF
50V
P2
VLED_IN
IN1
IN2
IN3
IN4
IN5
1729160
R7
1K2
R9
270R
C12
100nF
50V
D3
US1D
U4
H11L1SR2M
O1
R10
1K2
R15
270R
C14
100nF
50V
D4
U5
O2
R17
1K2
R18
270R
C19
100nF
50V
D5
U7
O3
R19
1K2
R20
270R
C20
100nF
50V
D6
U8
O4
R21
1K2
R22
270R
C21
100nF
50V
D7
U9
O5
R8
10K
BOOT
S1
R11
10K
R12
10K
R13
10K
R14
10K
Z0
Z1
Z2
Z3
S2
SW-4-SPST-NO
U3
MIL_RX
TX
RX
SET
VDD
GND
Milight
C13
10uF
6.3V
B1
<BOM_ITEM>
Connector
B2
<BOM_ITEM>
Connector
P3
TXD0
RXD0
EN
UART
R16
10K
C15
100nF
50V
C16
10uF
6.3V
C17
10uF
6.3V
C18
100nF
50V
U6
ESP32-WROVER
GND
VDD33
EN
SENSOR_VP
SENSOR_VN
IO34
IO35
IO32
IO33
IO25
IO26
IO27
IO14
IO12
IO13
SD2
SD3
CMD
PPAD
IO23
IO22
TXD0
RXD0
IO21
NC
IO19
IO18
IO5
IO4
IO0
IO2
IO15
SD1
SD0
CLK
MIL_RX
O3
O2
O1
BOOT