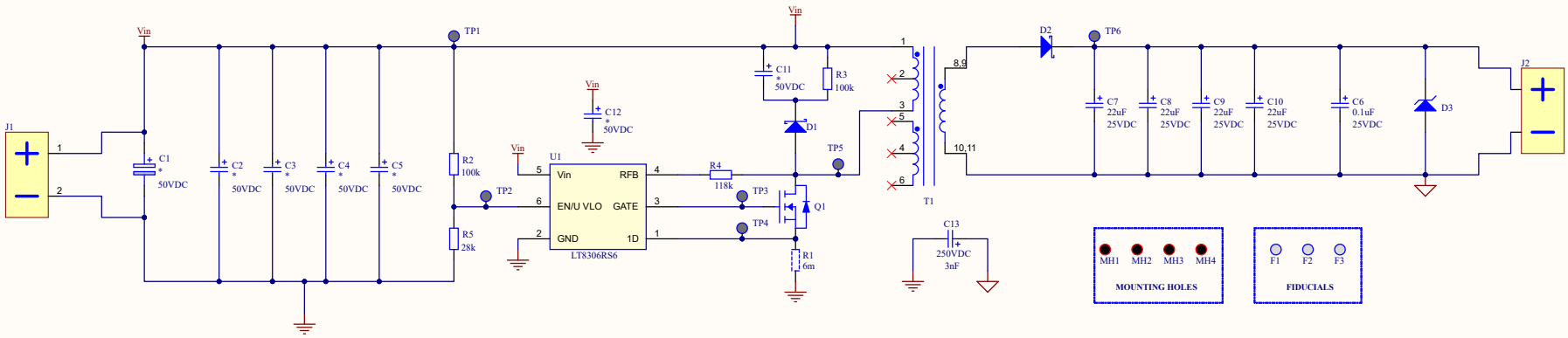

Title	Flyback Converter	
Size B	Number 1	Revision 1.0
Date: 8/20/2024	Sheet 1 of 1	
File: D:\4 WORKSPACE\..\flyback.SchDoc	Drawn By: MOHAMED GUENI	