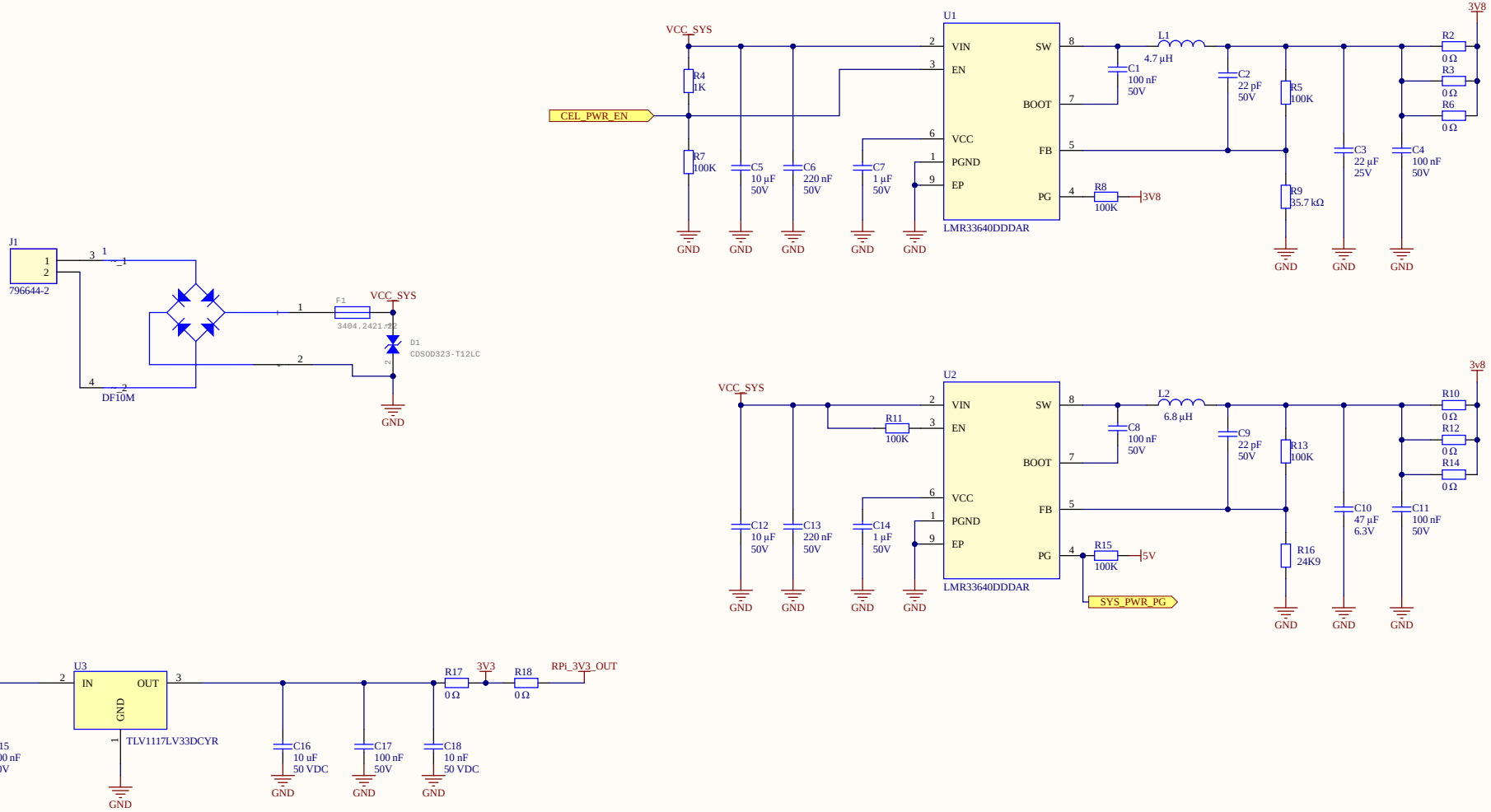

Power Supply

Author : Mohamed Gueni
mohamedgueni@outlook.com

Size	FCSM No.	DWG No.	Rev
A3			R0
Scale		Sheet	
		1/11	

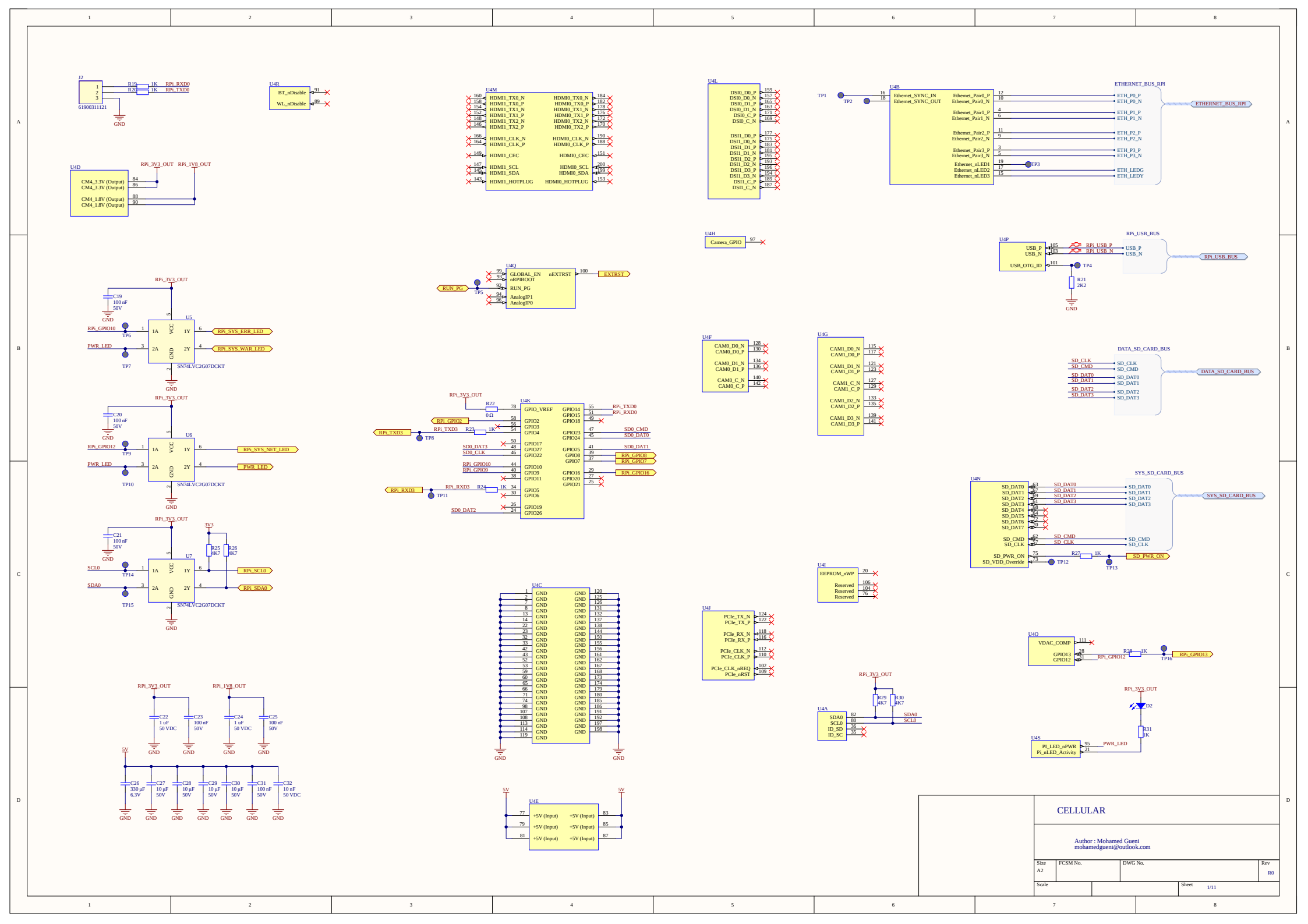
J2
61900311121
R19 1K RPi_RXD0
R20 1K RPi_TXD0
GND
U4R
BT_nDisable
WL_nDisable
91
89
U4M
HDMI1_TX0_N
HDMI1_TX0_P
HDMI1_TX1_N
HDMI1_TX1_P
HDMI1_TX2_N
HDMI1_TX2_P
HDMI1_CLK_N
HDMI1_CLK_P
HDMI1_CEC
HDMI1_SCL
HDMI1_SDA
HDMI1_HOTPLUG
HDMI0_TX0_N
HDMI0_TX0_P
HDMI0_TX1_N
HDMI0_TX1_P
HDMI0_TX2_N
HDMI0_TX2_P
HDMI0_CLK_N
HDMI0_CLK_P
HDMI0_CEC
HDMI0_SCL
HDMI0_SDA
HDMI0_HOTPLUG
U4L
DSI0_D0_P
DSI0_D0_N
DSI0_D1_P
DSI0_D1_N
DSI0_C_P
DSI0_C_N
DSI1_D0_P
DSI1_D0_N
DSI1_D1_P
DSI1_D1_N
DSI1_D2_P
DSI1_D2_N
DSI1_D3_P
DSI1_D3_N
DSI1_C_P
DSI1_C_N
TP1
TP2
U4B
Ethernet_SYNC_IN
Ethernet_SYNC_OUT
Ethernet_Pair0_P
Ethernet_Pair0_N
Ethernet_Pair1_P
Ethernet_Pair1_N
Ethernet_Pair2_P
Ethernet_Pair2_N
Ethernet_Pair3_P
Ethernet_Pair3_N
Ethernet_nLED1
Ethernet_nLED2
Ethernet_nLED3
TP3
ETH_P0_P
ETH_P0_N
ETH_P1_P
ETH_P1_N
ETH_P2_P
ETH_P2_N
ETH_P3_P
ETH_P3_N
ETH_LEDG
ETH_LEDY
ETHERNET_BUS_RPI
U4D
CM4_3.3V (Output)
CM4_3.3V (Output)
CM4_1.8V (Output)
CM4_1.8V (Output)
RPi_3V3_OUT
RPi_1V8_OUT
U4H
Camera_GPIO
U4P
USB_P
USB_N
USB_OTG_ID
RPi_USB_P
RPi_USB_N
TP4
R21 2K2
RPi_USB_BUS
U4Q
GLOBAL_EN
nRPIBOOT
RUN_PG
AnalogIP1
AnalogIP0
nEXTRST
RUN_PG
TP5
EXTRST
U4F
CAM0_D0_N
CAM0_D0_P
CAM0_D1_N
CAM0_D1_P
CAM0_C_N
CAM0_C_P
U4G
CAM1_D0_N
CAM1_D0_P
CAM1_D1_N
CAM1_D1_P
CAM1_C_N
CAM1_C_P
CAM1_D2_N
CAM1_D2_P
CAM1_D3_N
CAM1_D3_P
SD_CLK
SD_CMD
SD_DAT0
SD_DAT1
SD_DAT2
SD_DAT3
DATA_SD_CARD_BUS
U5
U6
U7
SN74LVC2G07DCKT
RPi_GPIO10
PWR_LED
RPi_GPIO12
SCL0
SDA0
TP6
TP7
TP9
TP10
TP14
TP15
C19 100 nF 50V
C20 100 nF 50V
C21 100 nF 50V
RPi_SYS_ERR_LED
RPi_SYS_WAR_LED
RPi_SYS_NET_LED
PWR_LED
RPi_SCL0
RPi_SDA0
3V3
R25 4K7
R26 4K7
U4K
GPIO_VREF
GPIO2
GPIO3
GPIO4
GPIO17
GPIO27
GPIO22
GPIO10
GPIO9
GPIO11
GPIO5
GPIO6
GPIO19
GPIO26
GPIO14
GPIO15
GPIO18
GPIO23
GPIO24
GPIO25
GPIO8
GPIO7
GPIO16
GPIO20
GPIO21
R22 0 Ω
R23 1K
R24 1K
RPi_TXD3
RPi_RXD3
SD0_DAT3
SD0_CLK
SD0_DAT2
TP8
TP11
RPi_TXD0
RPi_RXD0
SD0_CMD
SD0_DAT0
SD0_DAT1
RPi_GPIO8
RPi_GPIO7
RPi_GPIO16
U4N
SD_DAT4
SD_DAT5
SD_DAT6
SD_DAT7
SD_PWR_ON
SD_VDD_Override
R27 1K
TP12
TP13
SYS_SD_CARD_BUS
SYS_SD_CARD_BUS
U4I
EEPROM_nWP
Reserved
U4J
PCIe_TX_N
PCIe_TX_P
PCIe_RX_N
PCIe_RX_P
PCIe_CLK_N
PCIe_CLK_P
PCIe_CLK_nREQ
PCIe_nRST
U4O
VDAC_COMP
GPIO13
GPIO12
R28 1K
TP16
RPi_GPIO12
RPi_GPIO13
U4A
SDA0
SCL0
ID_SD
ID_SC
R29 4K7
R30 4K7
U4S
PI_LED_nPWR
Pi_nLED_Activity
PWR_LED
D2
R31 1K
C22 1 uF 50 VDC
C23 100 nF 50V
C24 1 uF 50 VDC
C25 100 nF 50V
C26 330 µF 6.3V
C27 10 µF 50V
C28 10 µF 50V
C29 10 µF 50V
C30 10 µF 50V
C31 100 nF 50V
C32 10 nF 50 VDC
5V
U4C
U4E
+5V (Input)
CELLULAR
Author : Mohamed Gueni
mohamedgueni@outlook.com
Size A2
FCSM No.
DWG No.
Rev R0
Scale
Sheet 1/11

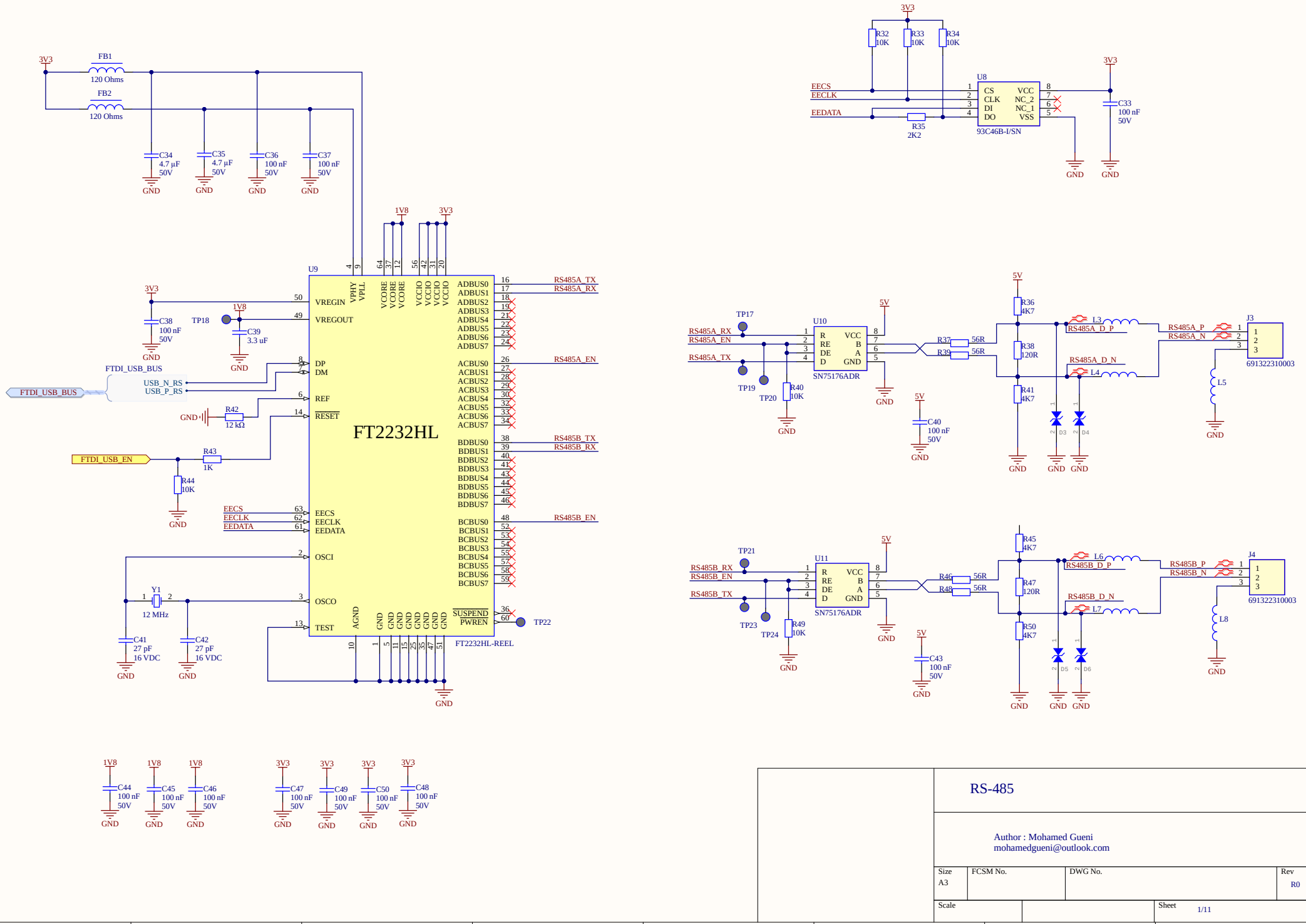

RS-485

Author : Mohamed Gueni
mohamedgueni@outlook.com

Size	FCSM No.	DWG No.	Rev
A3			R0

Scale		Sheet
		1/11

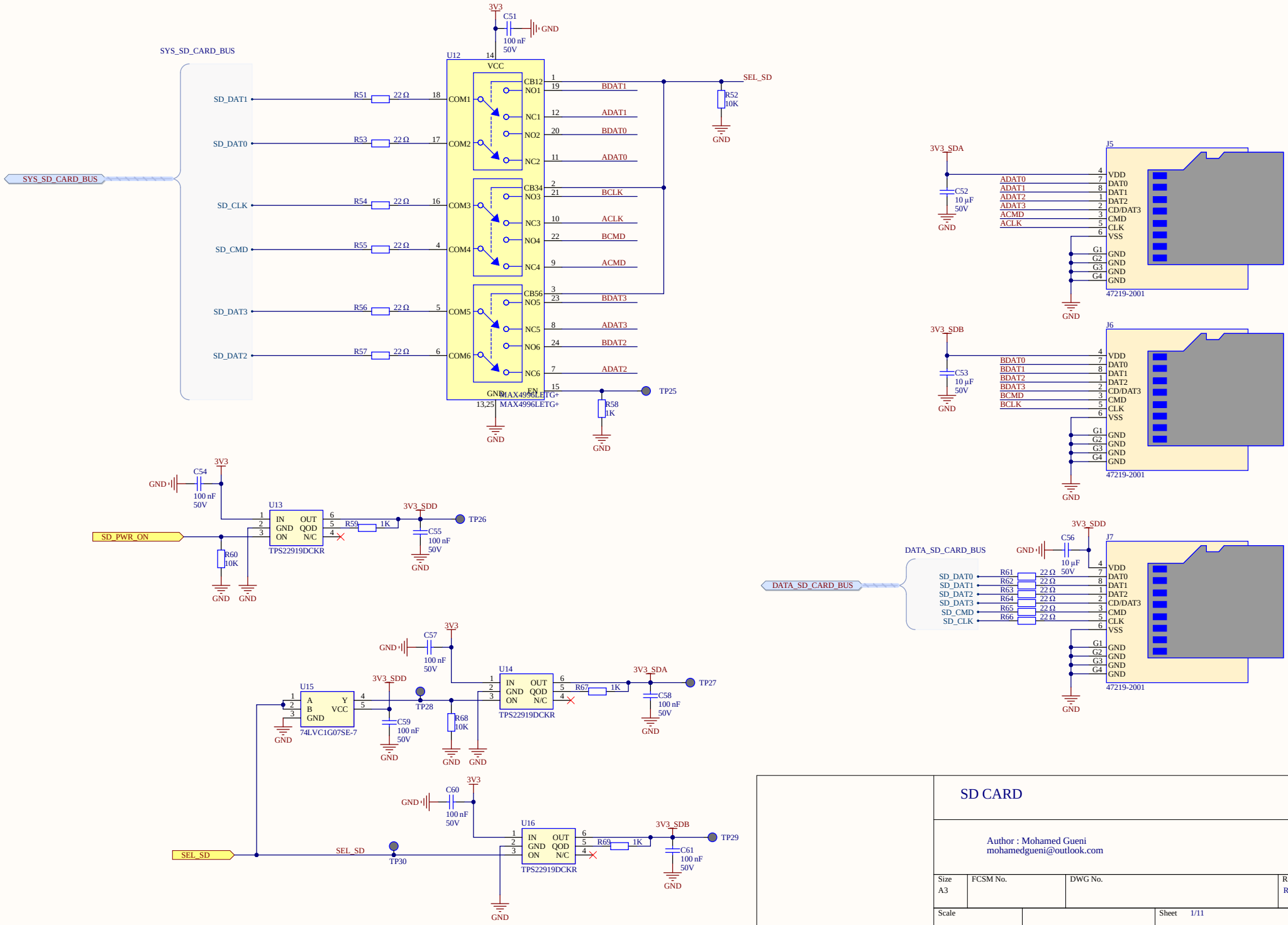

SD CARD

Author : Mohamed Gueni
mohamedgueni@outlook.com

Size	FCSM No.	DWG No.	Rev
A3			R0

Scale		Sheet 1/11

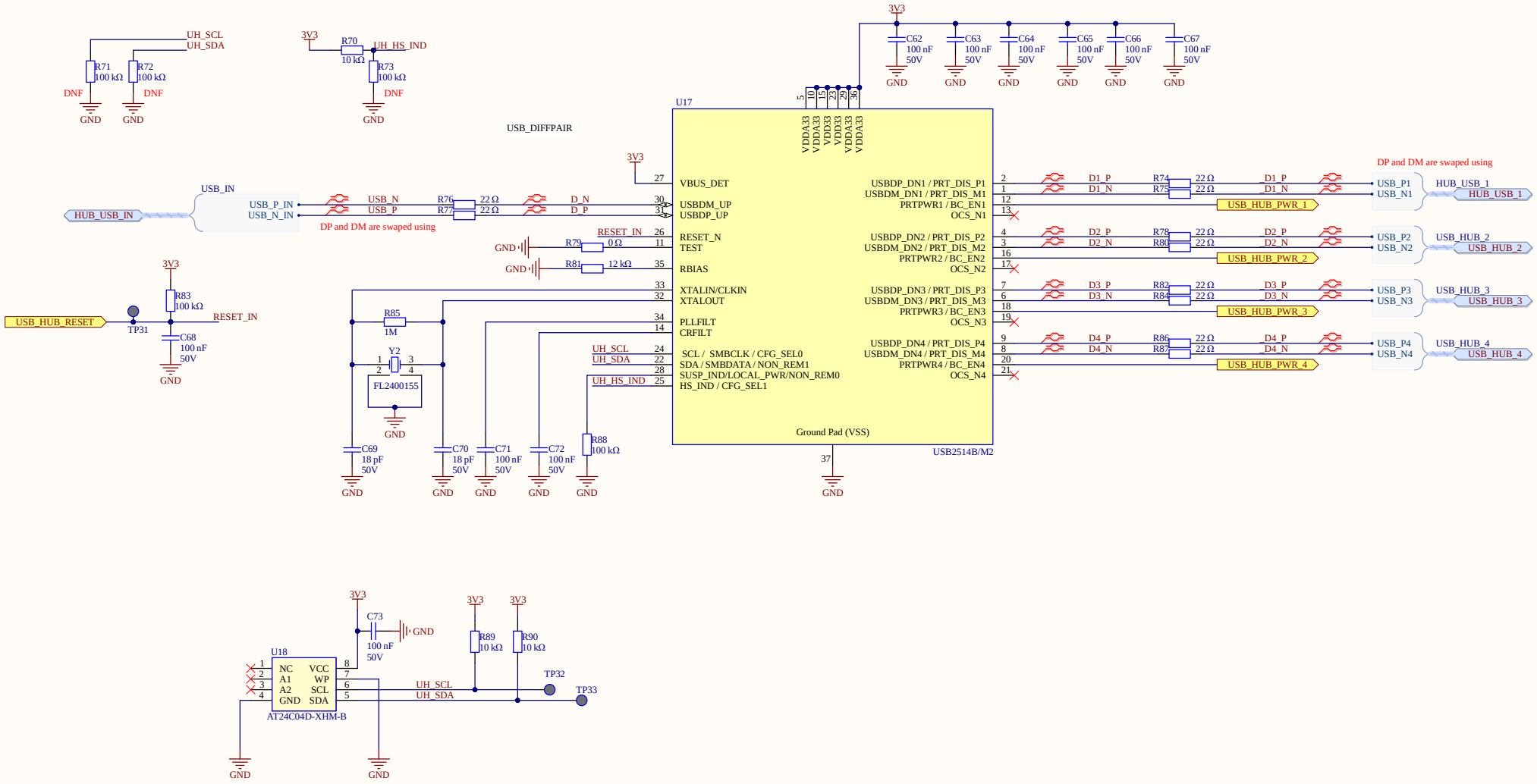

USB HUB

Author : Mohamed Gueni
mohamedgueni@outlook.com

Size	FCSM No.	DWG No.	Rev
A3			R0

Scale		Sheet
		1/11

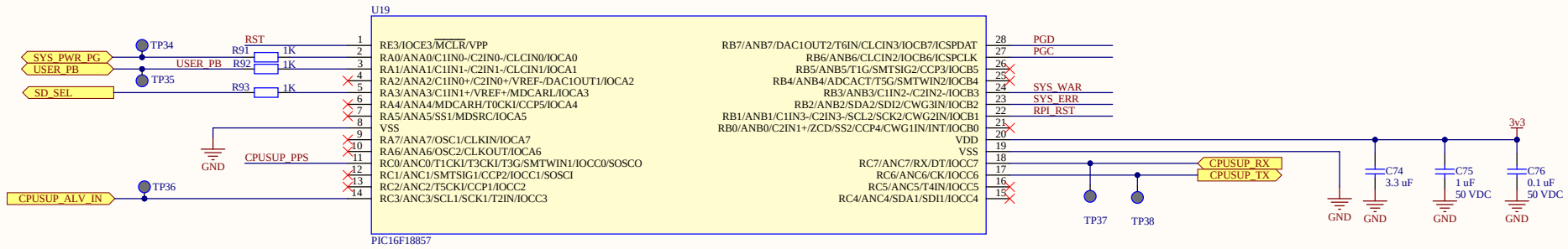

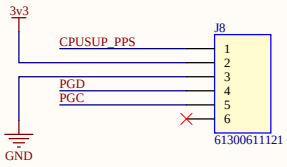

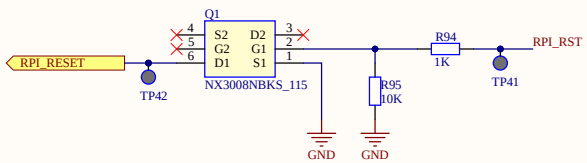

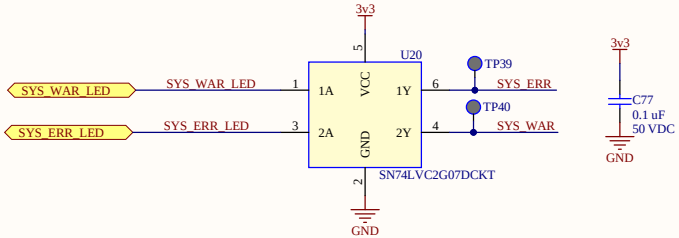

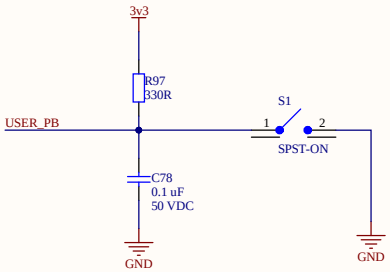

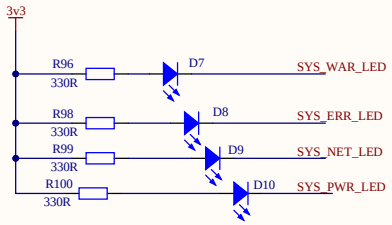

CPU_superviser

Author : Mohamed Gueni
mohamedgueni@outlook.com

Size	FCSM No.	DWG No.	Rev
A3			R0

Scale		Sheet
		8/11

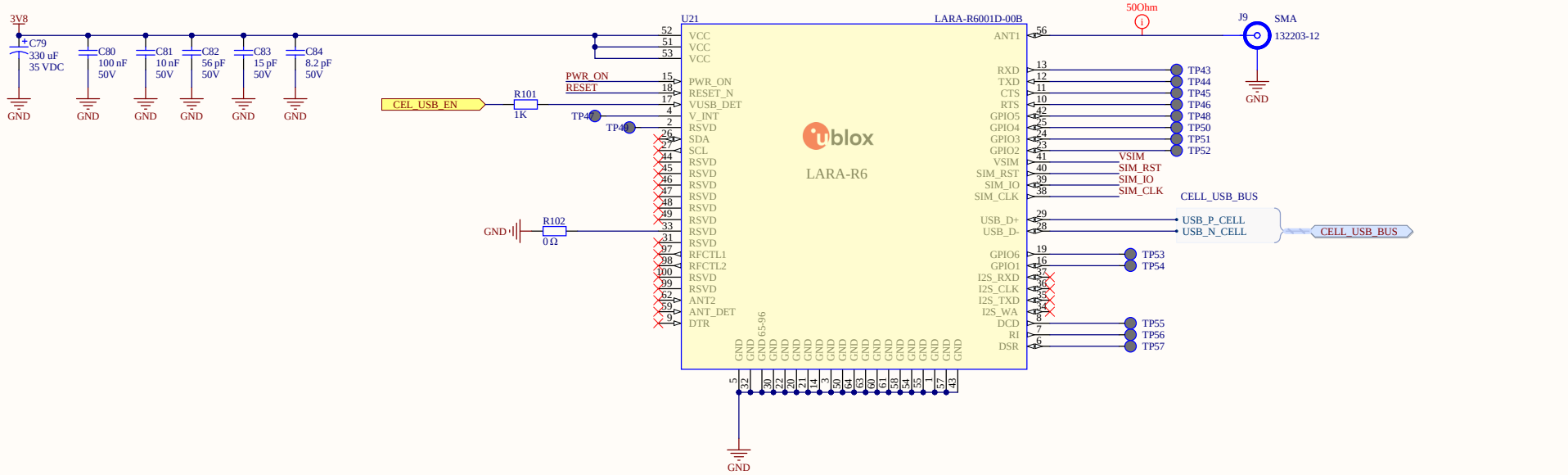

CELLULAR

Author : Mohamed Gueni
mohamedgueni@outlook.com

Size	FCSM No.	DWG No.	Rev
A3			R0

Scale		Sheet
		1/11

Compute Module Gateway

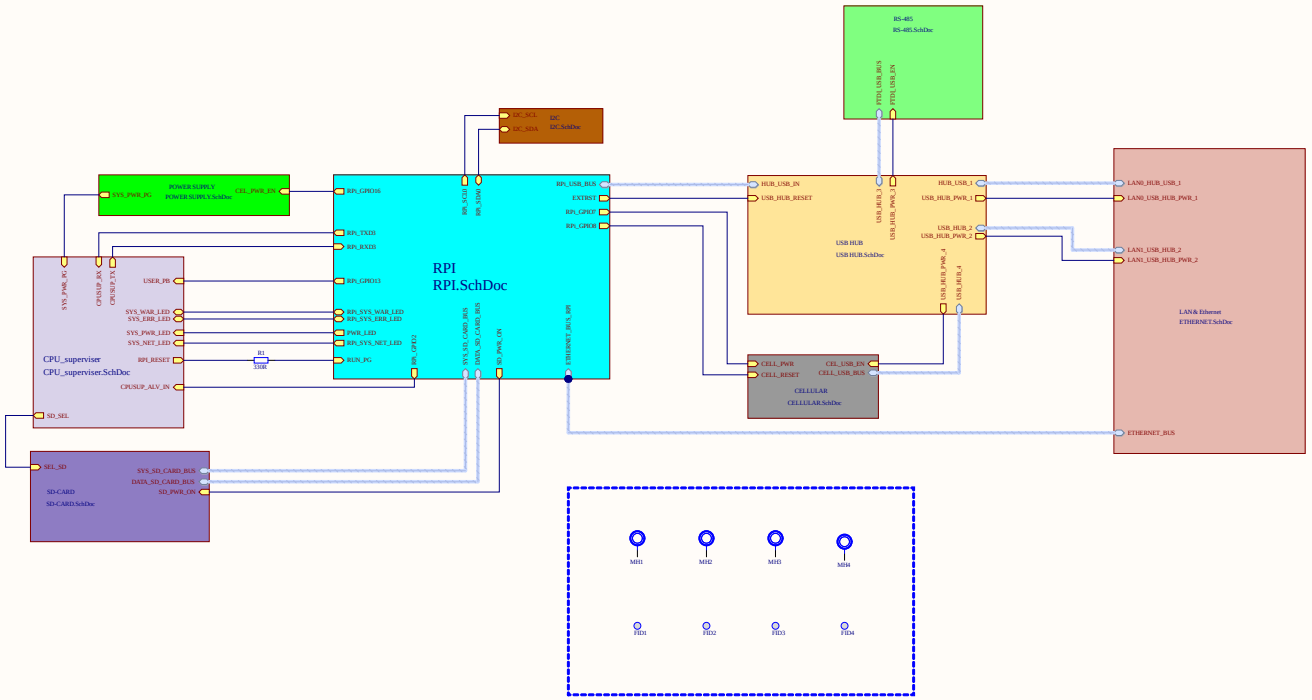

	Raspberry Pi Compute Module Gateway		
	Author : Mohamed Gueni mohamedgueni@outlook.com		
Size D	PCSM No.	DWG No.	Rev R0
Scale		Sheet 1/11	

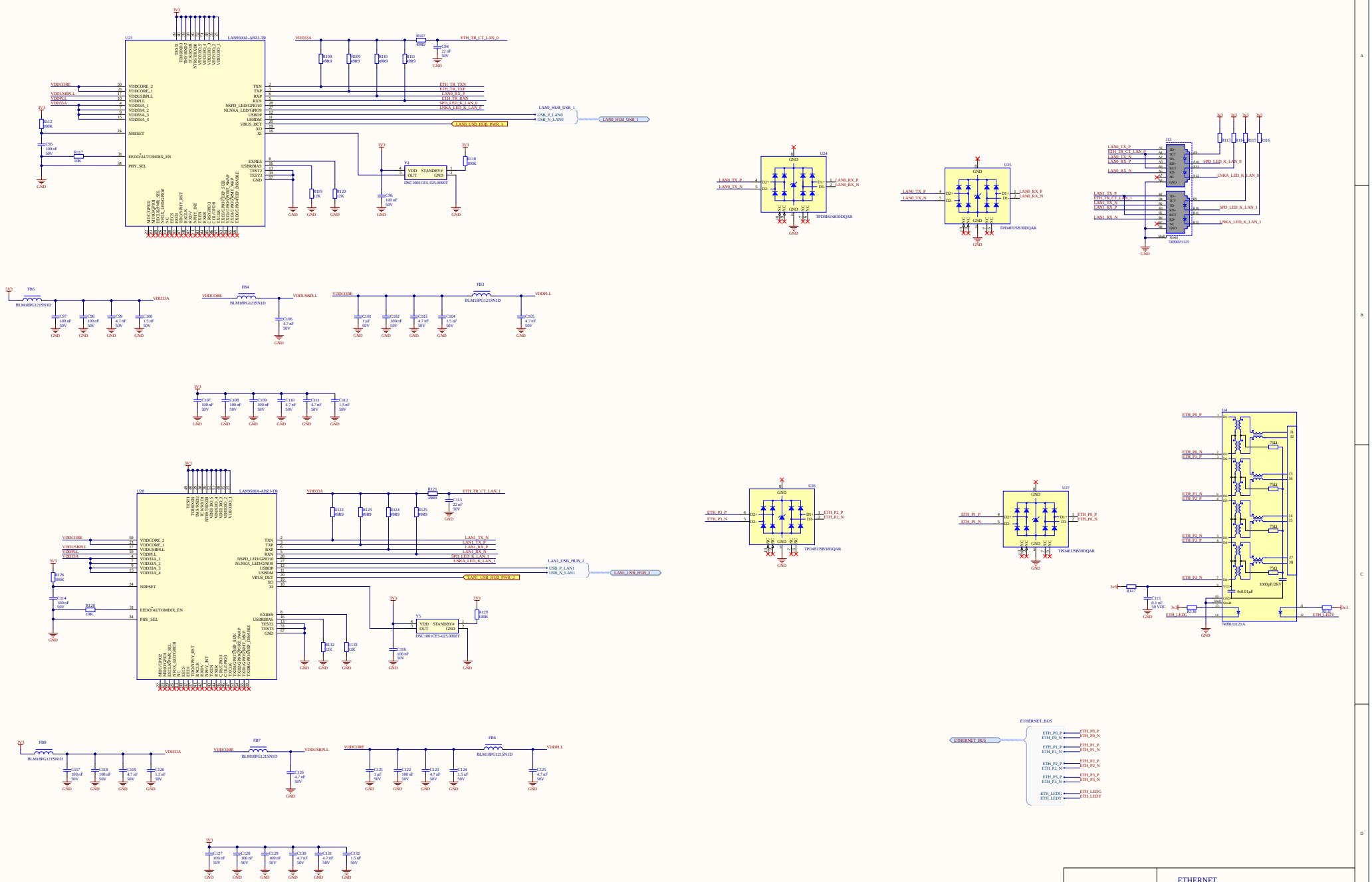

ETHERNET

Author : Mohamed Gueni
mohamedgueni@outlook.com

Size	FCSM No.	DWG No.	Rev
A1			R0
Scale		Sheet	1/11

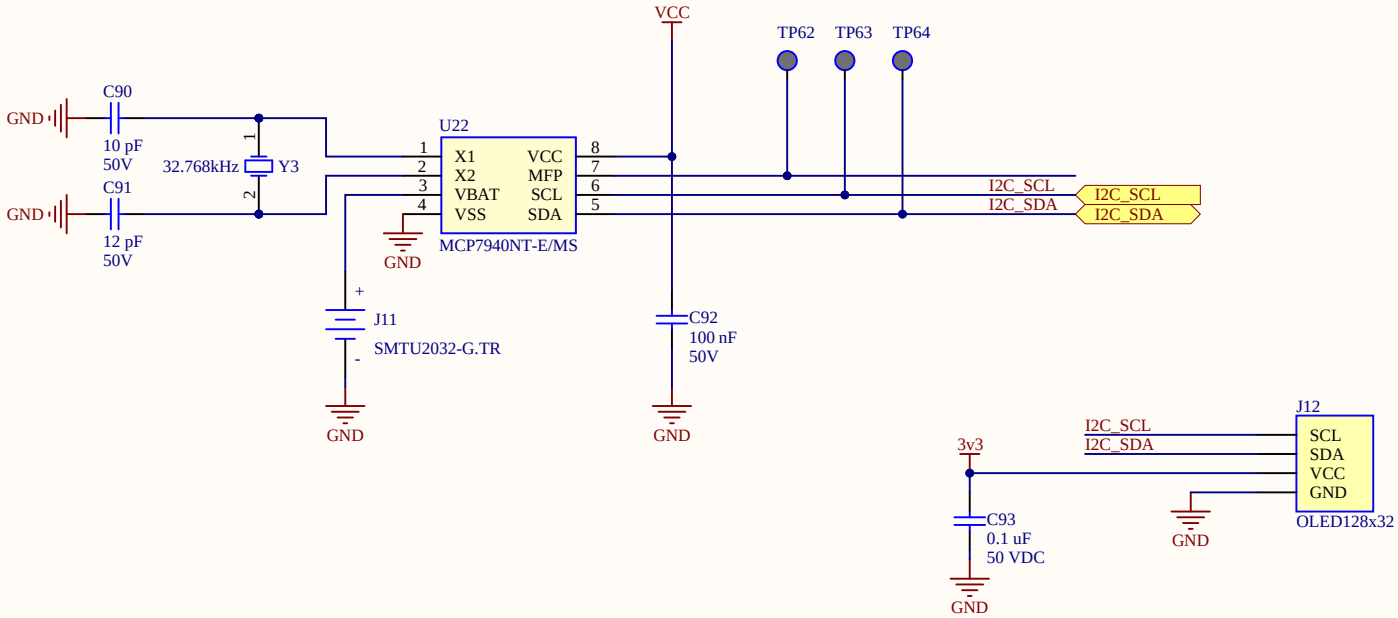

I2C

Author : Mohamed Gueni
mohamedgueni@outlook.com

Size	FCSM No.	DWG No.	Rev
A4			R0

Scale		Sheet
		1/11