Experiment 1

Aim :

The objective of this experiment is to understand and implement basic digital logic circuits using Logisim Evolution. The experiment focuses on designing and simulating fundamental components such as multiplexers, priority encoders, and combinational logic circuits.

Procedure :

In this experiment, various digital circuits were designed and simulated using Logisim. A multiplexer(81) was implemented to select inputs based on control signals, and a hierarchical multiplexer design was created to handle multiple input lines efficiently. A priority encoder(83) circuit was also designed to convert multiple input signals into a coded output. Additionally, combinational logic circuits using OR gates were implemented to understand signal flow and logical operations. The outputs were verified by changing input values and observing the corresponding results.

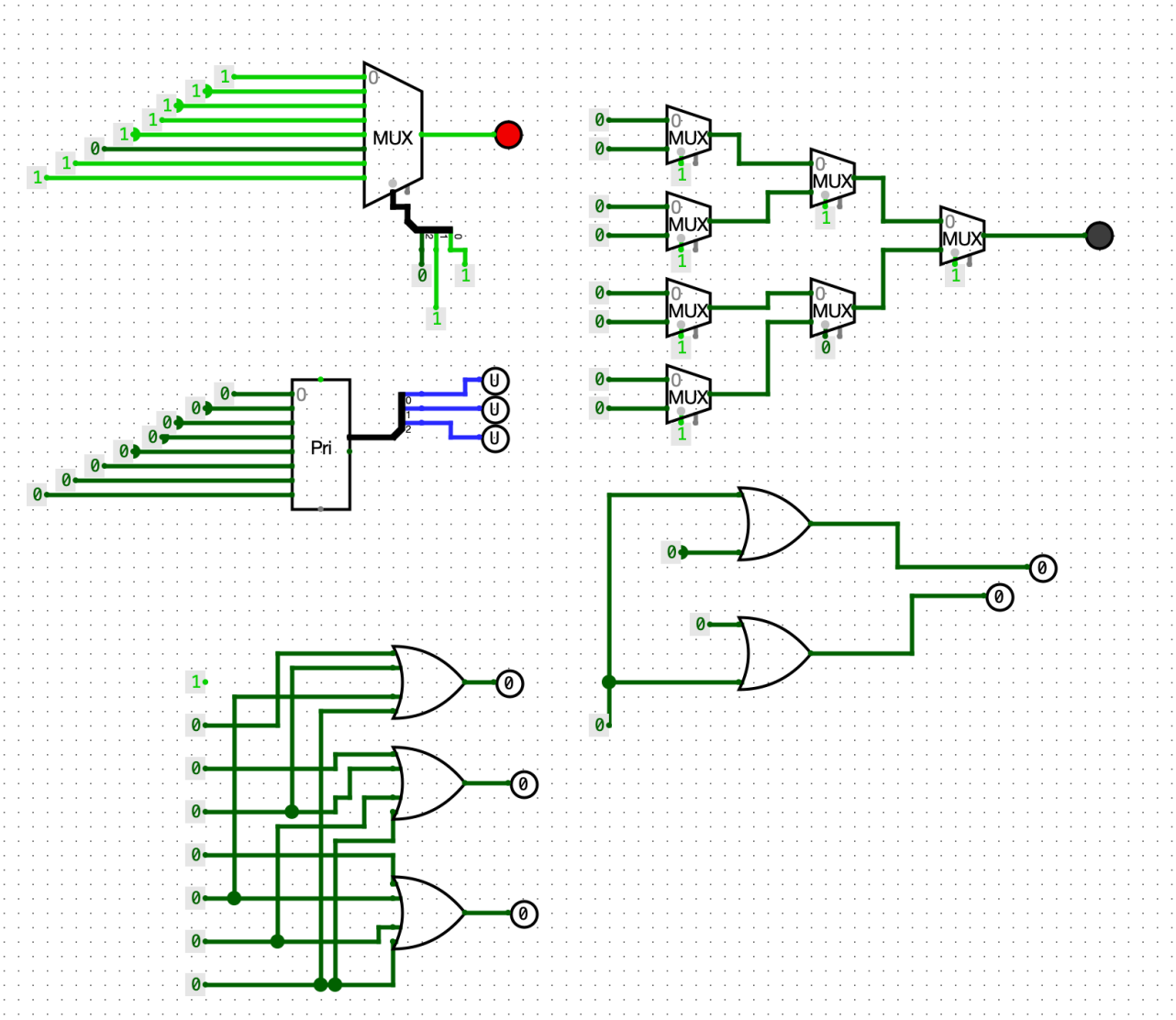

Lab implementation (Logisim)

1. 8*1 Multiplexer : An 8-to-1 multiplexer (MUX) is a combinational circuit that selects one of eight data inputs (-) and directs it to a single output () based on three selection lines (). It operates as a digital switch, where the binary code on the select lines determines which input is passed to the output

Y = I0S2S1S0+I1S2S1S0 +I2S2S1S0+ I3S2S1S0 +I4S2S1S0+I5S2S1S0 + I6S2S1S0.+I7S2S1S0

S0	S1	S2	Y
0	0	0	I0
0	0	1	I0
0	1	0	I0
0	1	1	I0
1	0	0	I0
1	0	1	I0
1	1	0	I0
1	1	1	I0

Truth table of MUX

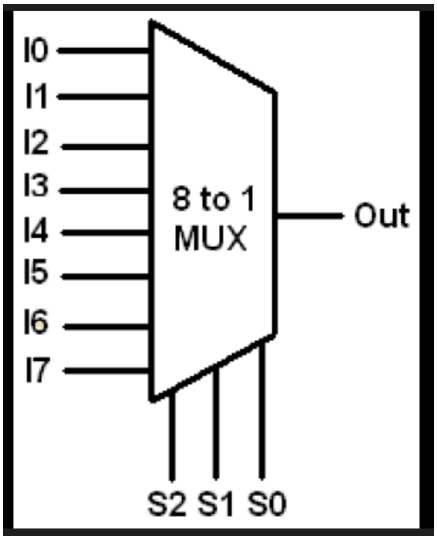

Diagram of MUX

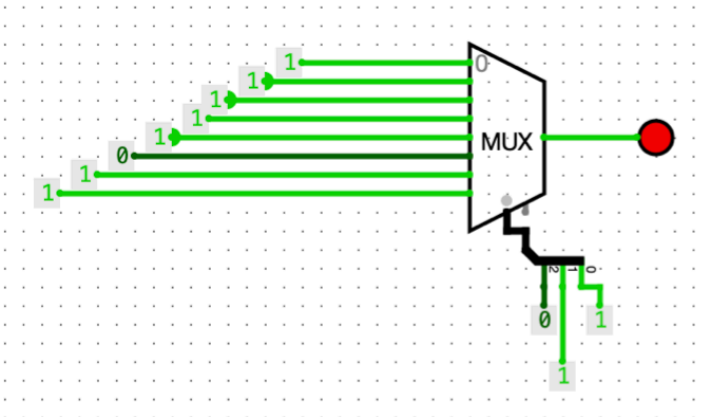

Circuit Diagram of MUX

2. Priority encoder:

The priority encoder is a combinational logic circuit that contains 2^n input lines and n output lines and represents the highest priority input among all the input lines. When multiple input lines are active high at the same time, then the input that has the highest priority is considered first to generate the output.

D0	D1	D2	D3	D4	D5	D6	D7	Q1	Q2	Q3
1	0	0	0	0	0	0	0	0	0	0
0	1	0	0	0	0	0	0	0	0	1
0	0	1	0	0	0	0	0	0	1	0
0	0	0	1	0	0	0	0	0	1	1
0	0	0	0	1	0	0	0	1	0	0
0	0	0	0	0	1	0	0	1	0	
0	0	0	0	0	0	1	0	1	1	0
0	0	0	0	0	0	0	1	1	1	1

Truth table of Encoder(8*3)

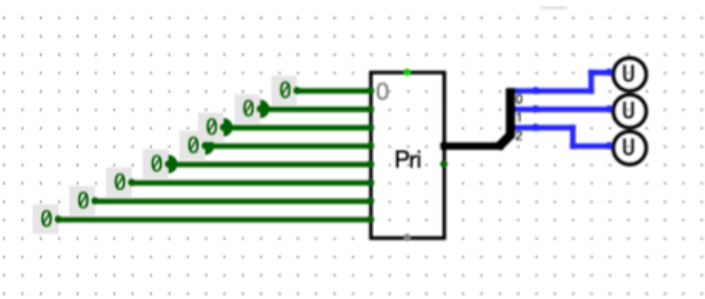

Logisim diagram

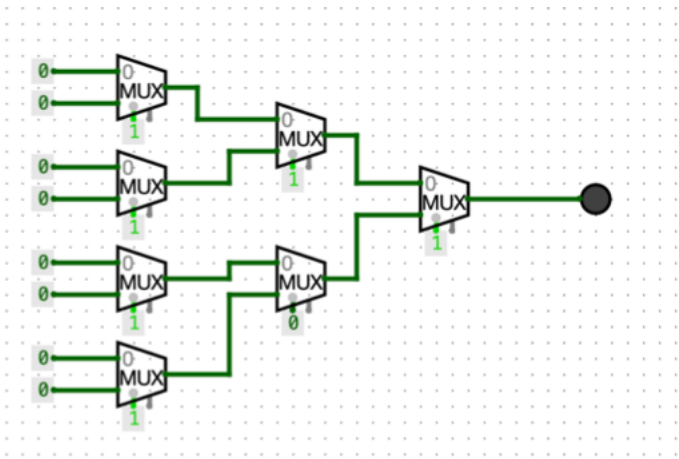

Priority encoder using mus

Results :

The simulation results showed that the multiplexers correctly selected inputs based on the select lines, and the priority encoder produced the expected binary output input. The corresponding to the highest priority combinational logic circuits responded accurately to different input combinations, confirming the correctness of the design

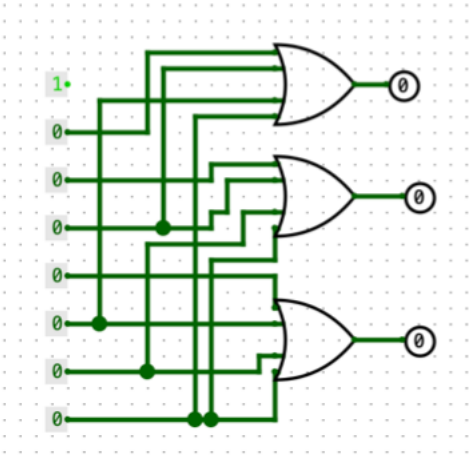

Using NOR gates

The experiment was successfully completed, and the designed circuits were verified using Logisim. The behavior of multiplexers, priority encoders, and basic logic gates was clearly understood through simulation. This experiment helped in developing a strong understanding of digital logic design and the practical implementation of combinational circuits.