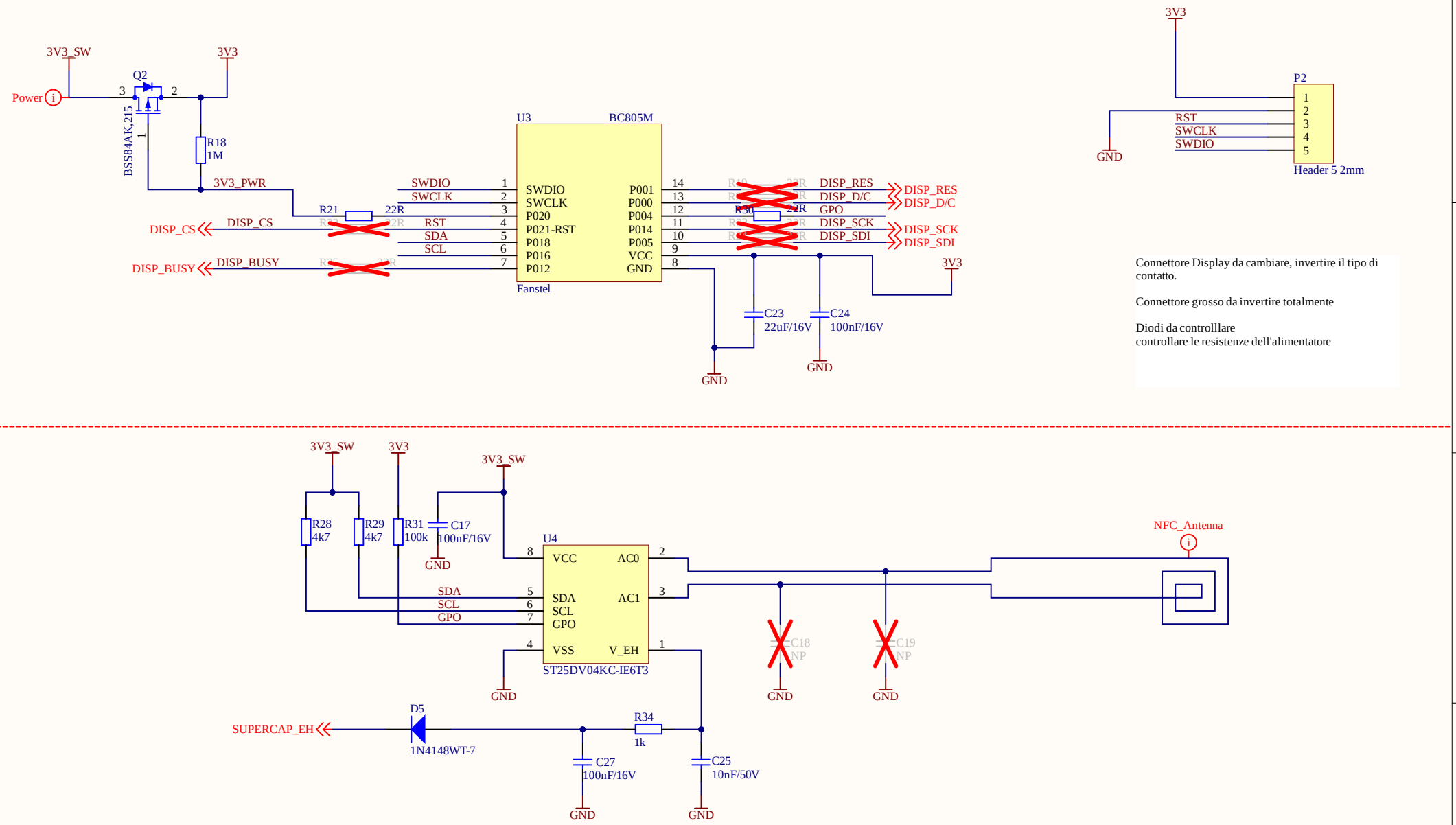

Title *Arduino and NFC*			Author: Simone C.
Size: A4	Revision: 1.3		CheckedBy: D. Actis Grosso
Date: 25/05/2026	Time: 21:45:45	Sheet 1 of 3	ApprovedBy: *

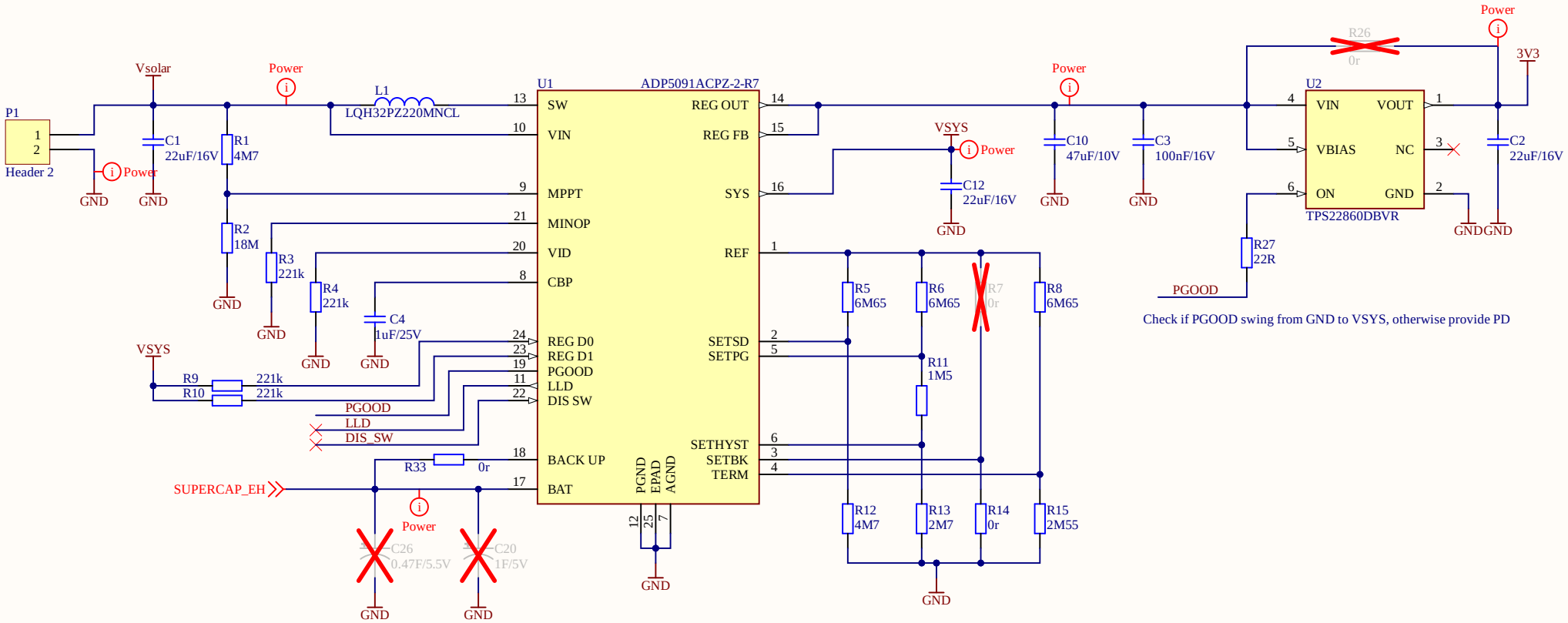

VSETDS: 2.9V
VSETBK: 3V
VTERM: 4.19V
Vrise: 4,35V
Vfall: 3,03V

Table 7. Output Voltage Options Set by the VID Pin

VID Configuration	Output Voltage Set by the VID Pin
Short to Ground	Programmed with external resistors
Floating	V_{OUT} = 2.5 V
R_{VID} = 7 kΩ	V_{OUT} = 1.5 V
R_{VID} = 14 kΩ	V_{OUT} = 1.8 V
R_{VID} = 27.7 kΩ	V_{OUT} = 3.6 V
R_{VID} = 55.6 kΩ	V_{OUT} = 3.3 V
R_{VID} = 111 kΩ	V_{OUT} = 2.0 V
R_{VID} = 221 kΩ	V_{OUT} = 3.0 V
R_{VID} = 442 kΩ	V_{OUT} = 2.8 V

Title	***PowerSupply***		Author: Simone C.
Size: A4	Revision: 1.3		CheckedBy: D. Actis Grosso
Date: 25/05/2026	Time: 21:45:45	Sheet 2 of 3	ApprovedBy: *

1.54" E-PAPER

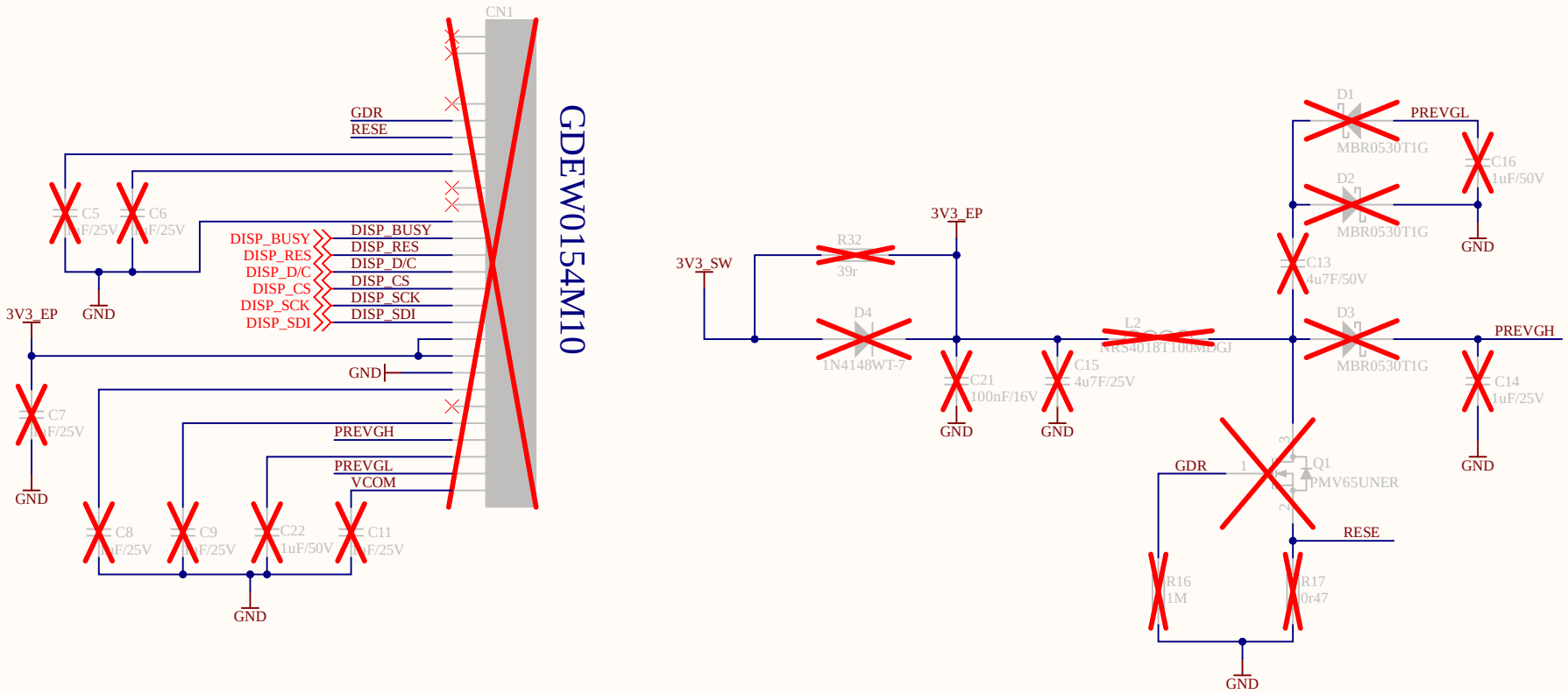

Title *Displays*			Author: Simone C.
Size: A4	Revision: 1.3		CheckedBy: D. Actis Grosso
Date: 25/05/2026	Time: 21:45:45	Sheet 3 of 3	ApprovedBy: *