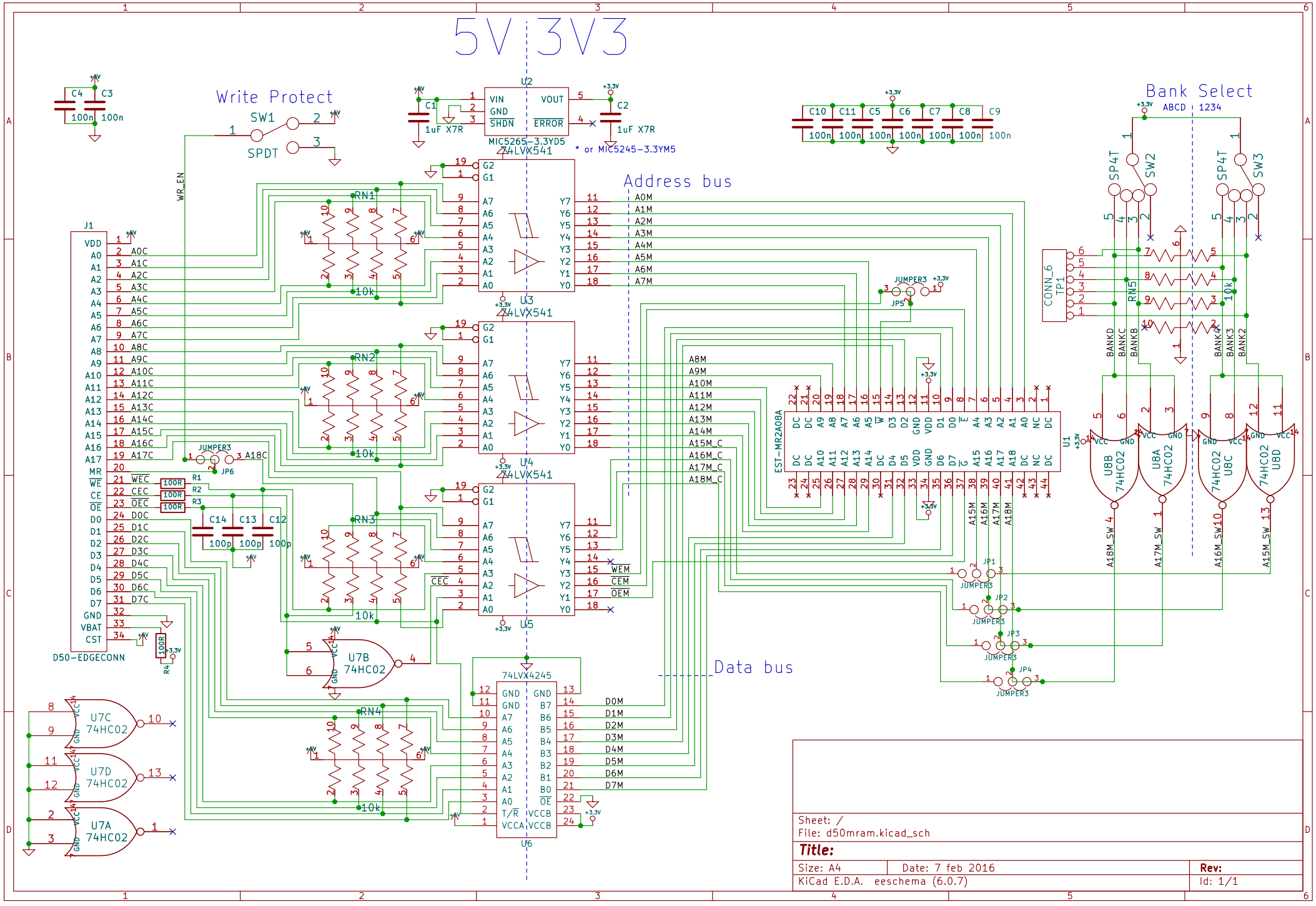
5V 3V3
Write Protect
SW1
SPDT
WR_EN
U2
VIN
GND
SHDN
VOUT
ERROR
MIC5265-3.3YD5
* or MIC5245-3.3YM5
C1
1uF X7R
C2
1uF X7R
C3
C4
100n
C5
C6
C7
C8
C9
C10
C11
Bank Select
ABCD
1234
SP4T
SW2
SW3
CONN_6
TP1
RN5
10k
BANKD
BANKC
BANKB
BANK4
BANK3
BANK2
Address bus
U3
U4
U5
74LVX541
RN1
RN2
RN3
RN4
A0M
A1M
A2M
A3M
A4M
A5M
A6M
A7M
A8M
A9M
A10M
A11M
A12M
A13M
A14M
A15M_C
A16M_C
A17M_C
A18M_C
WEM
CEM
OEM
J1
D50-EDGECONN
JUMPER3
JP5
JP6
JP1
JP2
JP3
JP4
U1
EST-MR2A08A
U8B
74HC02
U8A
74HC02
U8C
74HC02
U8D
74HC02
A18M_SW
A17M_SW
A16M_SW
A15M_SW
R1
R2
R3
R4
100R
C14
C13
C12
100p
U7B
74HC02
U7C
74HC02
U7D
74HC02
U7A
74HC02
74LVX4245
U6
Data bus
D0M
D1M
D2M
D3M
D4M
D5M
D6M
D7M
Sheet: /
File: d50mram.kicad_sch
Title:
Size: A4
Date: 7 feb 2016
Rev:
KiCad E.D.A. eeschema (6.0.7)
Id: 1/1