NOTES: (UNLESS OTHERWISE SPECIFIED)

1. REFER TO THE PCB RELEASE PACKAGE PROVIDED BY APPLE INC. FOR MASTER GEOMETRY DATA. THIS DRAWING IS SUPPLEMENTAL TO THE MASTER DATA AND TO BE USED TO INDICATE CRITICAL MECHANICAL FEATURES AND TOLERANCES. TOLERANCES ON THIS DRAWING ARE ONLY INTENDED FOR DIMENSIONS ON THIS DRAWING AND NOT FOR ALL DATA IN THE RELEASE PACKAGE.

2. GEOMETRIC DATA FILES PROVIDED BY APPLE INC. SHALL BE USED FOR MASTER DATA. A DRAWING OF EQUAL FILENAME AND REVISION TO THE GEOMETRIC DATA SHALL BE USED TO DETERMINE GEOMETRIC CHARACTERISTICS AND TOLERANCES. DRAWING DIMENSIONS ARE SUBORDINATE TO GEOMETRIC DATA UNLESS SPECIFIED ON DRAWING TO BE MASTER, AS MAY BE THE CASE OF CABLE LENGTHS OR TABULATED VARIABLE DIMENSIONS. THE SUPPLIER MUST COMPLY WITH THE STANDARDS PERTAINING TO THE TOLERANCE METHOD APPLIED.

3. GD&T - GEOMETRIC TOLERANCE METHODS IN ACCORDANCE TO ASME Y14.5-2009. DATUM REFERENCE FRAMES RANK AS DATUM A PRIMARY, B SECONDARY AND C TERTIARY. FEATURE CONTROL FRAMES MAY RE-ORDER DATUMS PER THE FEATURES DATUM DEPENDENCE. DIMENSIONS THAT LOCATE GEOMETRIC TOLERANCE CHARACTERISTICS ARE BASIC (EXACT). NO TOLERANCES APPLY TO BASIC DIMENSIONS.

4. DIRECT TOLERANCE DIMENSIONING - INTERPRET DIMENSIONS THAT DO NOT LOCATE GD&T CHARACTERISTICS OR GD&T CONTROLLED FEATURES AS THE DIRECT TOLERANCE DIMENSION SYSTEM. THE LOCAL PLUS+/MINUS-, LOCAL LIMIT AND TITLE BLOCK TOLERANCES APPLY.

5. IN THE ABSENCE OF DRAWING DIMENSIONS AND DATUMS, THE GEOMETRIC DATA IS BASIC. THE PLANES OF THE ABSOLUTE COORDINATE SYSTEM DENOTE THE DATUM REFERENCE PLANES AS X-Y = DATUM A, Y-Z = B AND X-Z = C. ALL GEOMETRIC DATA SURFACES ⌓ | 0.1 | A | B | C |.

6. PERFECT ORIENTATION AND/OR PERFECT LOCATION AT MMC AS REQUIRED FOR THE INTERRELATIONSHIP OF ALL DATUM FEATURES OF SIZE.

7. ON PARTS SUBJECT TO FREE STATE VARIATION, ALL TOLERANCES APPLY WHEN THE PART IS RESTRAINED ACCORDING TO FUNCTIONAL MATING CONDITIONS AS DEFINED BY THE DATUM REFERENCE FEATURE RANK OR FEATURE CONTROL FRAME DATUM RANK PER THE FEATURE INSPECTED. CONSULT PROPER APPLE INC. MANUFACTURING QUALITY ENGINEER (MQE) FOR APPROVAL/CLARIFICATION ON INDIVIDUAL PARTS.

8. TOLERANCES DESIGNATED WITH THE SYMBOL SPC SHALL BE PRODUCED WITH STATISTICAL TOLERANCE PROCESS CONTROLS. IN ORDER TO USE THE TOLERANCE ON A FEATURE, THE STATISTICAL PROCESS (CP, CPK, ETC) OF THE PART MUST BE VALIDATED AND APPROVED BY AN APPLE INC. MQE.

9. ALL TOOLING, FIXTURING AND OTHER UNIQUE ITEMS THAT ARE USED TO CREATE THIS PART ARE THE PROPERTY OF APPLE INC.

10. THE DESIGN OF ALL TOOLING OR FIXTURING REQUIRED FOR THE MANUFACTURING OR VERIFICATION OF THE PART SHALL BE APPROVED BY THE APPROPRIATE APPLE INC. ENGINEER PRIOR TO TOOL OR FIXTURE FABRICATION.

11. ALL HOMOGENEOUS MATERIALS MUST COMPLY WITH THE FOLLOWING ENVIRONMENTAL SPECIFICATIONS:
    - APPLE INC. REGULATED SUBSTANCES SPECIFICATION, 069-0135.
    - ALL ADHESIVES, COATINGS AND PAINTS, PRINTING INKS, AND CLEANING AGENTS USED IN THE MANUFACTURING OF THIS PART MUST COMPLY WITH THE APPLE VOC SPECIFICATION, 099-22549
    - ALL MATERIALS WITH RECYCLED CONTENT MUST COMPLY WITH THE APPLE RECYCLED & RENEWABLE MATERIAL SPECIFICATION, 099-15583

12. DIMENSIONS TO BE MEASURED AT FATP AFTER PRE-BENDING. FLEX VENDORS SHALL NOT REPORT ON THESE DIMENSIONS.

13. NO COMPONENTS IN THIS AREA.

14. UNLESS OTHERWISE SPECIFIED, COMPONENTS TO BE FULLY ENCAPSULATED WITH CT2288
    NO OVERFLOW BEYOND SPECIFIED AREA. NO OVERFLOW ONTO BOARD OUTLINE.

15. COPPER LAYERS: HA COPPER. ALL VIAS BUTTON PLATED.

16. COVERLAY - PYRALUX HXC COVERLAY.
    COLOR: MATTE BLACK
    GLOSS: 35 GU MAX

17. PRIOR TO SHIPMENT PRE-FOLD FLEX AND SHIP FLAT AT FLEX VENDOR.
    CYCLE TEST ON A LOT BASIS, BEND FLEX 20 TIMES AS INDICATED.
    USE A MANDREL OF DIMENSIONED RADIUS FOR BENDING TO INDICATED ANGLE.

18. INKJET OR SILKSCREEN APPLE LOGO, PART NUMBER AND REVISION WHERE INDICATED.

19. INKJET OR SILKSCREEN VENDOR NAME, CAVITY, AND DATE OF MANUFACTURE WHERE INDICATED.

20. ADHESIVE 1: NITTO 59106, 0.060 mm THICK 20 ±10gf/25mm PEEL OFF FORCE FOR COUPON
    ADHESIVE 2: NITTO 56302, 0.020 mm THICK 15 ±10gf/25mm PEEL OFF FORCE FOR COUPON
    RELEASE LINER: PET, 0.035 TO 0.10 mm THICK, TRANSLUCENT BLUE.

21. VESTIGE ALLOWED ONLY IN INDICATED AREA. UNLESS OTHERWISE SPECIFIED:
    MAX WIDTH: 1.50 mm
    MAX PROTRUSION: 0.25 mm

22. ATTACH BAR CODE STICKER OF APPROXIMATE SIZE AT APPROXIMATE LOCATION.
    USE APPLE FLEX DFM APPROVED CODE.
    NO OVERHANGING ADHESIVE - KEEP ADHESIVE PORTION OF THE STICKER ON THE FLEX.
    BARCODE STICKER TO INCLUDE PULL TAB AS INDICATED ON SHEET 6.

23. NOTE REMOVED

24. MEASURE WEIGHT (WITHIN 0.01 GRAM RESOLUTION) OF COMPLETED PART WITHOUT ANY RELEASE LINERS (DC)

25. B2B STIFFENER:
    SUS MATERIAL: 316L, 0.075 ±0.01 mm THICK (FAI 10)
    OPTION A: STAL 316L-1/2H
    OPTION B: JX NK316L-1/2H-BR(N)
    HARDNESS: 1/2H, 200-400 HV. MEASURE AT LOCATION INDICATED.
    NO VISIBLE GRAIN DIRECTION. BURR AWAY FROM FLEX.
    FINISH: 1.5 - 5 µm SEMI-BRIGHT NICKEL, PRE-PLATING.

    GLOSS AT 60°: 300 +75/-150 GU (FAI 1)

    ROUGHNESS: 0.18 ±0.13 µm Sa (FAI 9)

    STIFFENERS MUST BE INSPECTED AT SUS STIFFENER OQC AND FLEX IQC ON A LOT BASIS AND APPROVED BY APPLE MQE. COUPON LEVEL TESTING ACCEPTED.
    BOND STIFFENER WITH 0.060 ±0.01 mm THICK TSC200 CONDUCTIVE ADHESIVE.
    BOARD-BOARD CONNECTOR STIFFENER MUST BE ELECTRICALLY CONNECTED TO GND.

26. VESTIGE ALLOWED ONLY IN INDICATED AREA. UNLESS OTHERWISE SPECIFIED:
    MAX PROTRUSION: 0.50 mm

27. DO NOT PREBEND AT FLEX VENDOR.

28. REFER TO APPLE INC. SPECIFICATION DOCUMENT 080-2265 FOR DESIGN REQUIREMENTS

29. REFER TO APPLE INC. SPECIFICATION DOCUMENT 080-3842 FOR CONNECTOR INSPECTION REQUIREMENTS

30- REFER TO APPLE INC. SPECIFICATION DOCUMENT 062-9728 FOR SAFETY REQUIREMENTS

REV	ECO#	DESCRIPTION OF REVISION
04		INITIAL RELEASE. BJANOYAN 04/05/23
11		UPDATED FLEX OUTLINE AND STACKUP GCERVANTESBUCHEL 05/22/23
16		2D UPDATES WITH LINERS, SILKSCREEN, VESTIGE DETAILS, AND STACKUP UPDATES. BJANOYAN 06/22/23
17		UPDATED SILKSCREEN, SHIFTED HAC COIL, AND MISC. IDX CLEANUP. BJANOYAN 06/30/23
18		UPDATED IDX SILKSCREEN, 2D CLEANUP, CORRECTED STACKUP PAGE. BJANOYAN 07/05/23
19		UPDATED BARCODE STICKER LOCATION, UPDATED BEND NOTES, VARIOUS 2D CLEANUP FOLLOWING FEEDBACK. BJANOYAN 07/06/23
20		SMALL IDX CLEANUP. BJANOYAN 07/06/23
21		UPDATED COMPASS PSA, SHIFTED BARCODE STICKER, UPDATED ZONE E STACKUP, UPDATED COMPASS LOCATION. BJANOYAN 07/07/23
22		UPDATED ADHESIVE LINER, REMOVED FAI11 AND 67. BJANOYAN 07/10/23

FOLDED FLEX - LINERS REMOVED

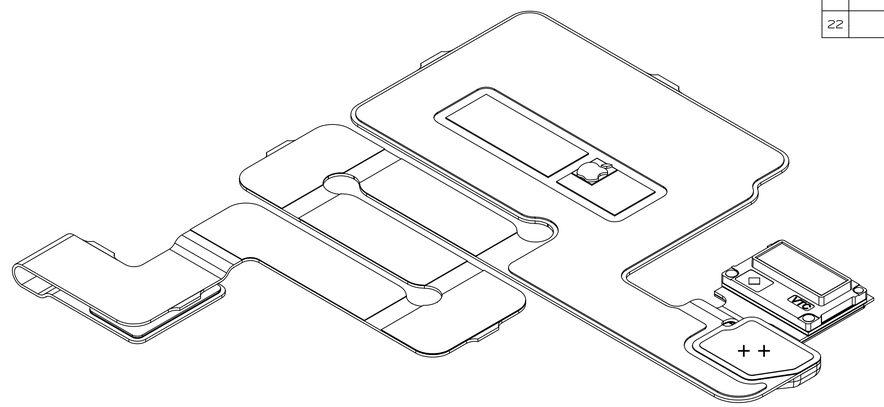

FLAT FLEX - WITH LINERS

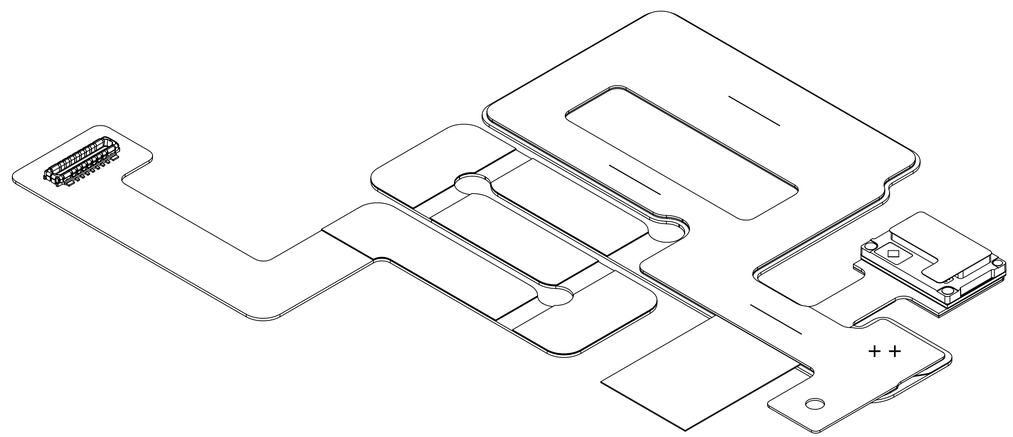

TABLE OF CONTENTS

PAGE #	CONTENTS
1	OVERVIEW
2	MECHANICAL OUTLINE
3	COMPONENT PLACEMENT/KEEPOUT
4	STIFFENER AND ENCAPSULATION
5	BENDS
6	ADHESIVE, VESTIGE AND SILKSCREEN
7	STACK UP

METRIC

Apple Inc.

DRAFTER	DATE
APPLE PD	05/22/23
DESIGNER	DATE
APPLE PD	05/22/23

DIMENSIONS ARE IN MILLIMETERS
TOLERANCES

X.X ±0.2
X.XX ±0.20
X.XXX ±0.050
ANGLES ±0.5°

DO NOT SCALE DRAWINGS

NOTICE OF PROPRIETARY PROPERTY:
THE INFORMATION CONTAINED HEREIN IS THE PROPRIETARY PROPERTY OF APPLE INC. THE POSSESSOR AGREES TO THE FOLLOWING:
(i) TO MAINTAIN THIS DOCUMENT IN CONFIDENCE
(ii) NOT TO REPRODUCE OR COPY IT
(iii) NOT TO REVEAL OR PUBLISH IT IN WHOLE OR PART
(iv) ALL RIGHTS RESERVED

TITLE

MCO, FLEX, SENSOR, D47

DRAWING NUMBER 056-18341 REV. 22

THIRD ANGLE PROJECTION

SIZE D

SCALE NONE

SHT 1 OF 7

NX GENERATED

MECHANICAL OUTLINE

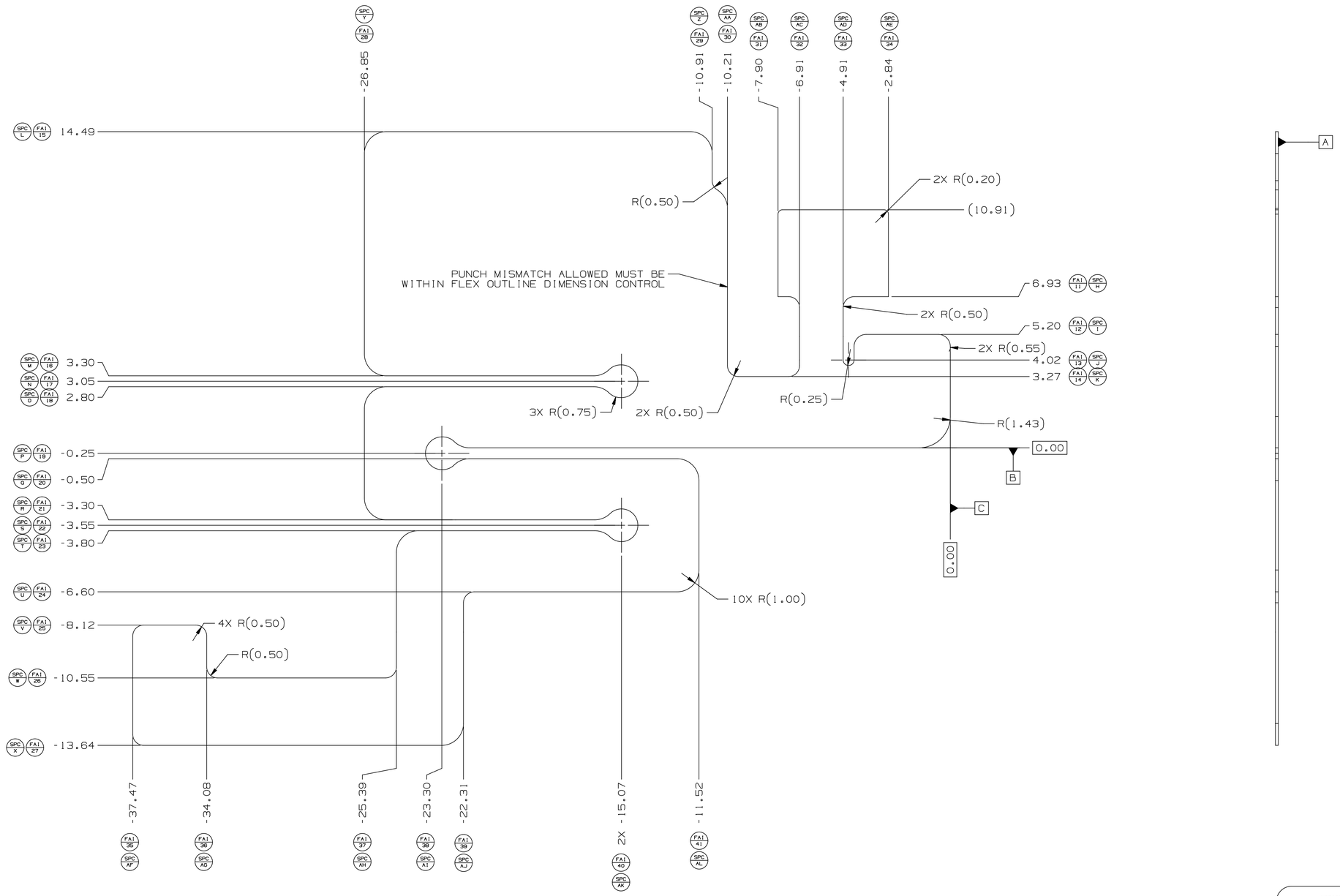

NOTICE OF PROPRIETARY PROPERTY:

THE INFORMATION CONTAINED HEREIN IS THE PROPRIETARY PROPERTY OF APPLE INC. THE POSSESSOR AGREES TO THE FOLLOWING:
(i) TO MAINTAIN THIS DOCUMENT IN CONFIDENCE
(ii) NOT TO REPRODUCE OR COPY IT
(iii) NOT TO REVEAL OR PUBLISH IT IN WHOLE OR PART
(iv) ALL RIGHTS RESERVED

Apple Inc.

SIZE	DRAWING NUMBER	REV.
D	056-18341	22
SCALE: NONE	SHT 2 OF 7	

COMPONENT KEEPOUT

TOP SIDE

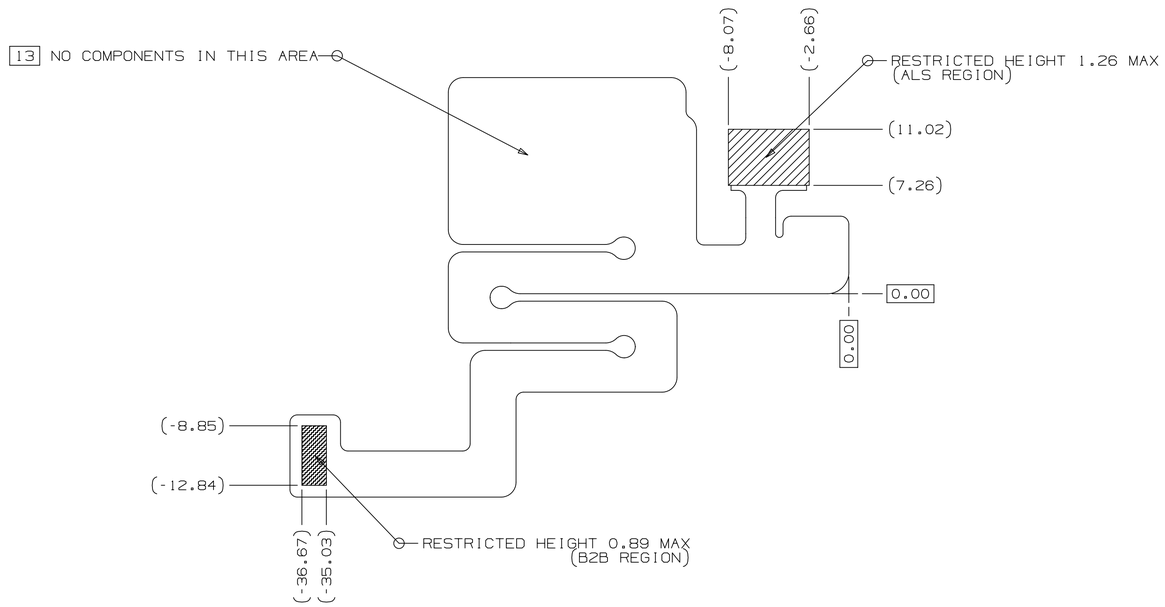

BOTTOM SIDE

LOOKING THROUGH TOP SIDE

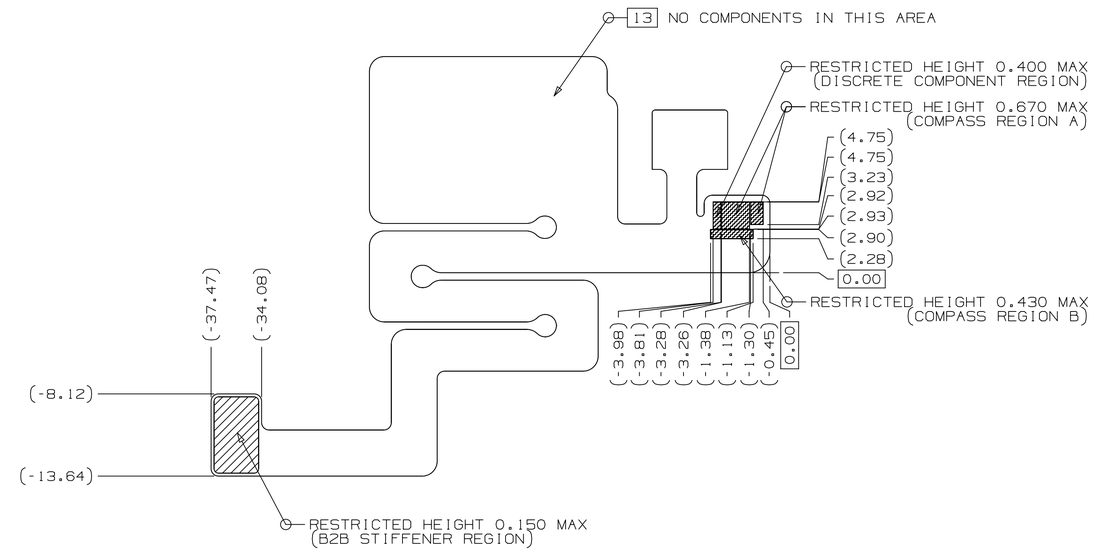

COMPONENT PLACEMENT

TOP SIDE

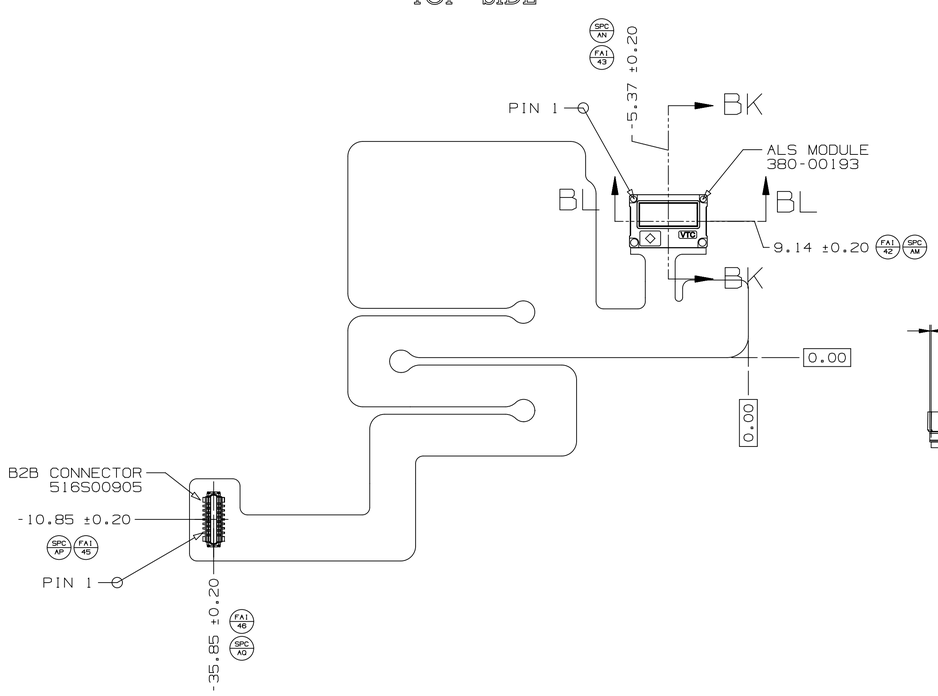

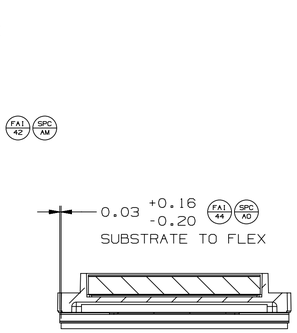

SECTION BL - BL

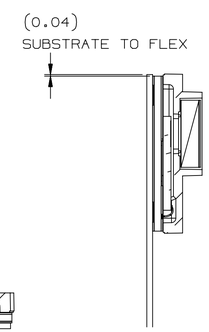

SECTION BK - BK

BOTTOM SIDE

LOOKING THROUGH TOP SIDE

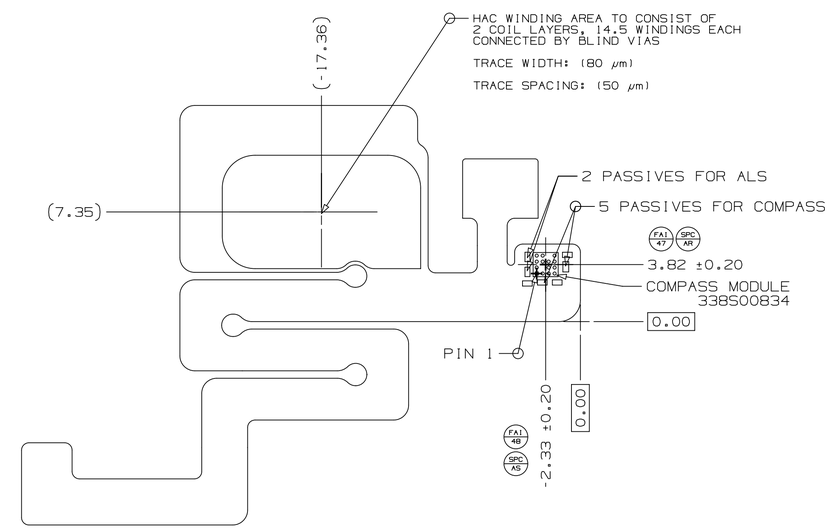

NOTICE OF PROPRIETARY PROPERTY:

THE INFORMATION CONTAINED HEREIN IS THE PROPRIETARY PROPERTY OF APPLE INC. THE POSSESSOR AGREES TO THE FOLLOWING:
(i) TO MAINTAIN THIS DOCUMENT IN CONFIDENCE
(ii) NOT TO REPRODUCE OR COPY IT
(iii) NOT TO REVEAL OR PUBLISH IT IN WHOLE OR PART
(iv) ALL RIGHTS RESERVED

Apple Inc.

SIZE	DRAWING NUMBER	REV.
D	056-18341	22
SCALE: NONE	SHT 3 OF 7	

STIFFENERS

TOP SIDE

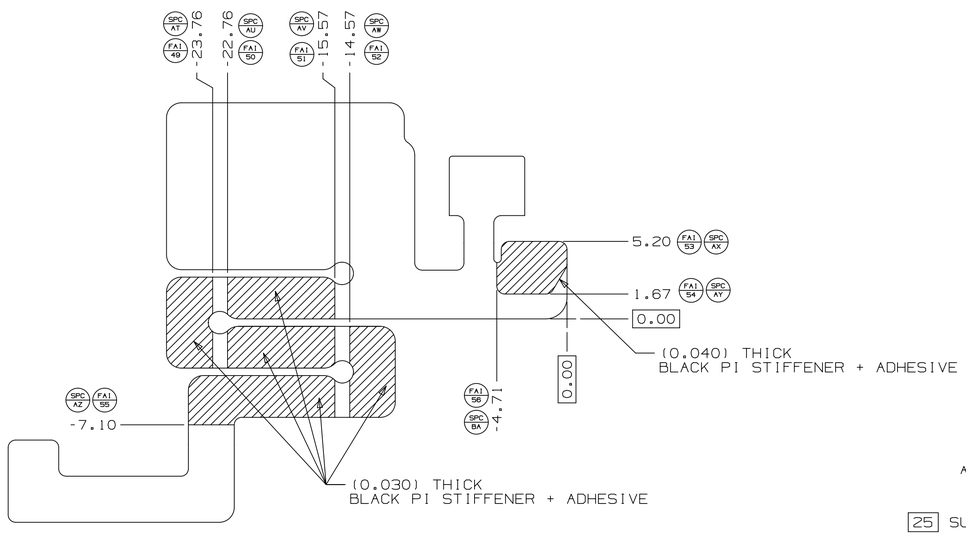

BOTTOM SIDE

LOOKING THROUGH TOP SIDE

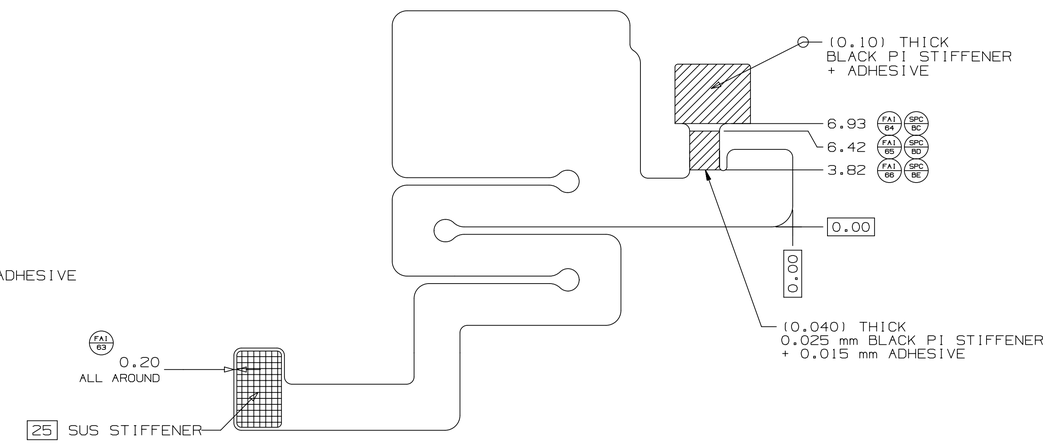

ENCAPSULATION

TOP SIDE

NO ENCAP

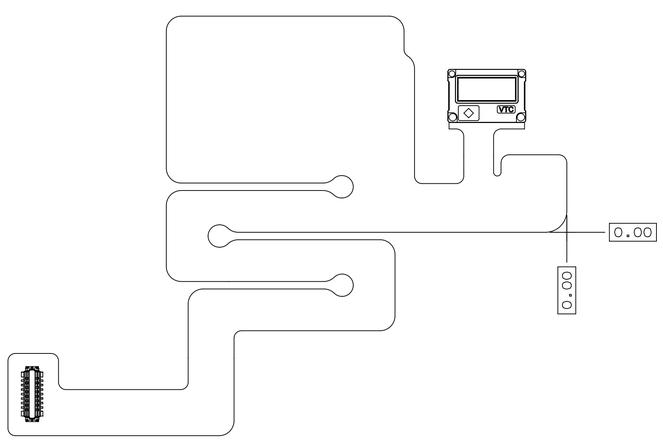

BOTTOM SIDE

LOOKING THROUGH TOP SIDE

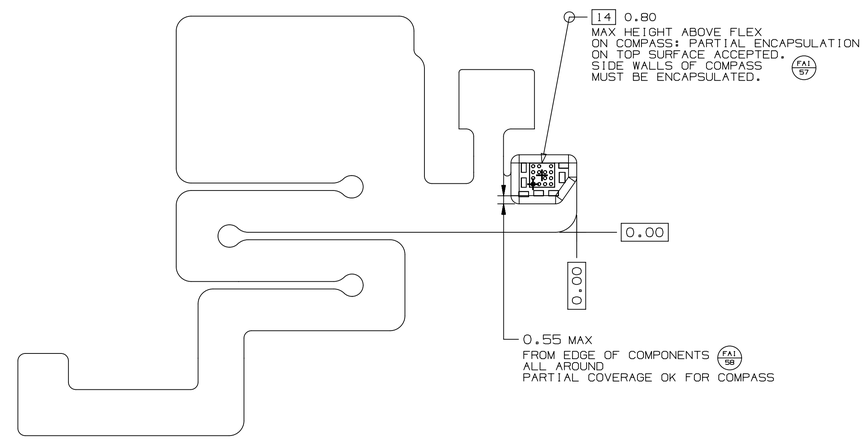

NOTICE OF PROPRIETARY PROPERTY:

THE INFORMATION CONTAINED HEREIN IS THE PROPRIETARY PROPERTY OF APPLE INC. THE POSSESSOR AGREES TO THE FOLLOWING:
(i) TO MAINTAIN THIS DOCUMENT IN CONFIDENCE
(ii) NOT TO REPRODUCE OR COPY IT
(iii) NOT TO REVEAL OR PUBLISH IT IN WHOLE OR PART
(iv) ALL RIGHTS RESERVED

Apple Inc.

SIZE	DRAWING NUMBER	REV.
D	056-18341	22
SCALE: NONE	SHT 4 OF 7	

BEND REGIONS

FLAT STATE

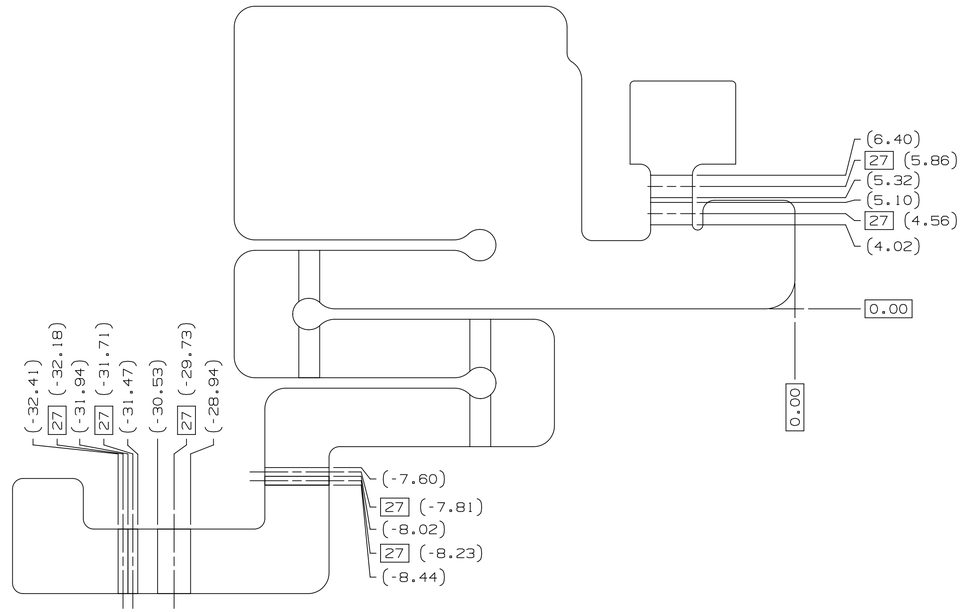

FOLDED STATE

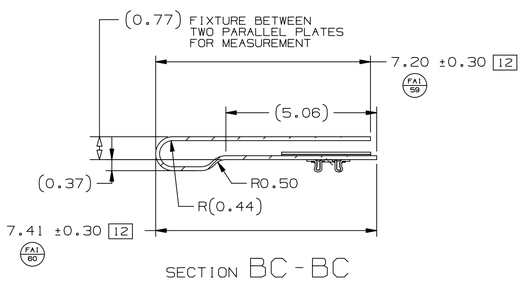

SECTION BC - BC

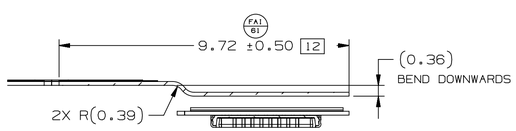

SECTION BG - BG

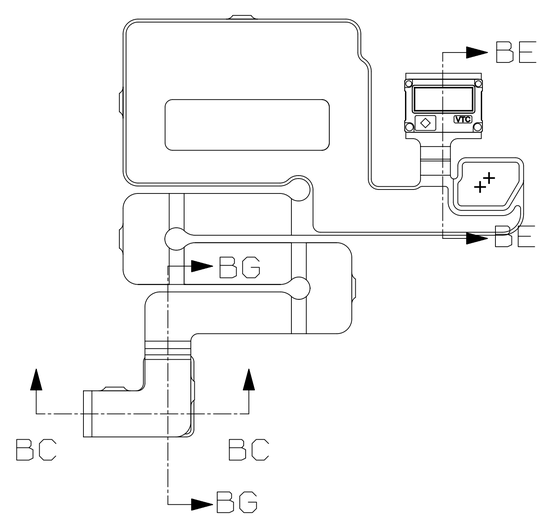

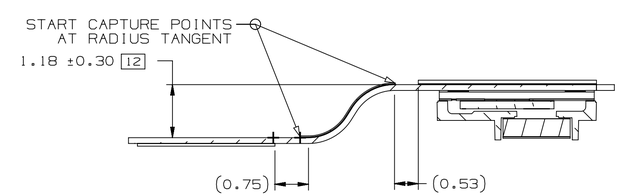

SECTION BE - BE

NOTICE OF PROPRIETARY PROPERTY:
THE INFORMATION CONTAINED HEREIN IS THE PROPRIETARY PROPERTY OF APPLE INC. THE POSSESSOR AGREES TO THE FOLLOWING:
(i) TO MAINTAIN THIS DOCUMENT IN CONFIDENCE
(ii) NOT TO REPRODUCE OR COPY IT
(iii) NOT TO REVEAL OR PUBLISH IT IN WHOLE OR PART
(iv) ALL RIGHTS RESERVED

Apple Inc.

SIZE	DRAWING NUMBER	REV.
D	056-18341	22
SCALE: NONE	SHT 5 OF 7	

ADHESIVE

TOP SIDE

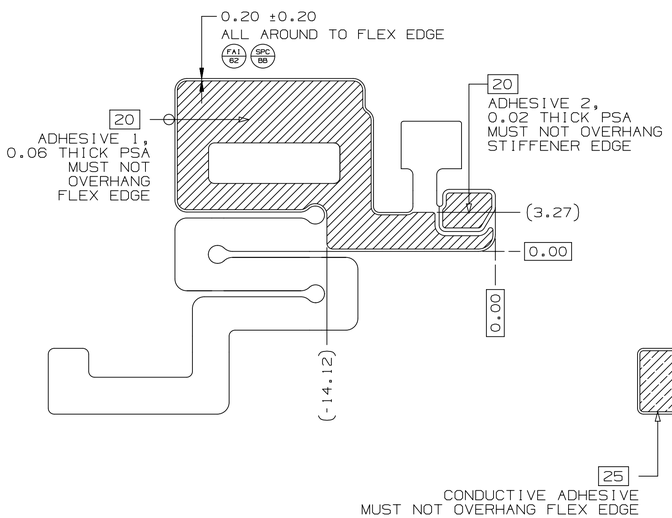

BOTTOM SIDE

VIEWED THROUGH TOP

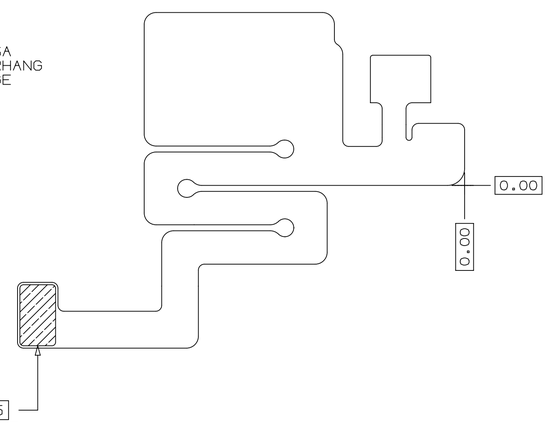

TOP SIDE LINERS

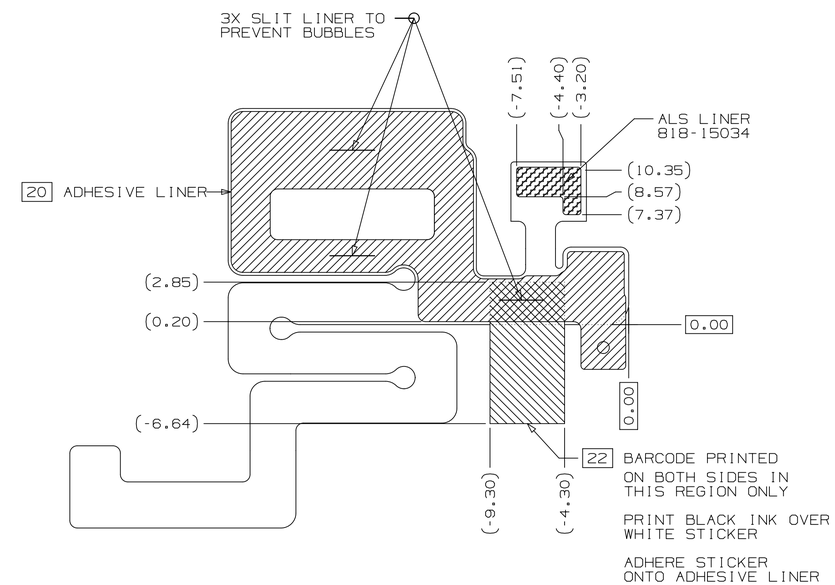

VESTIGES

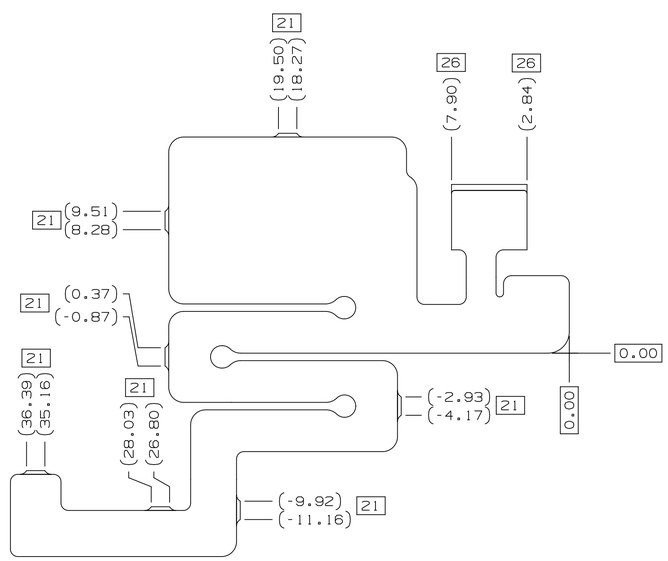

SILKSCREEN AND BARCODE

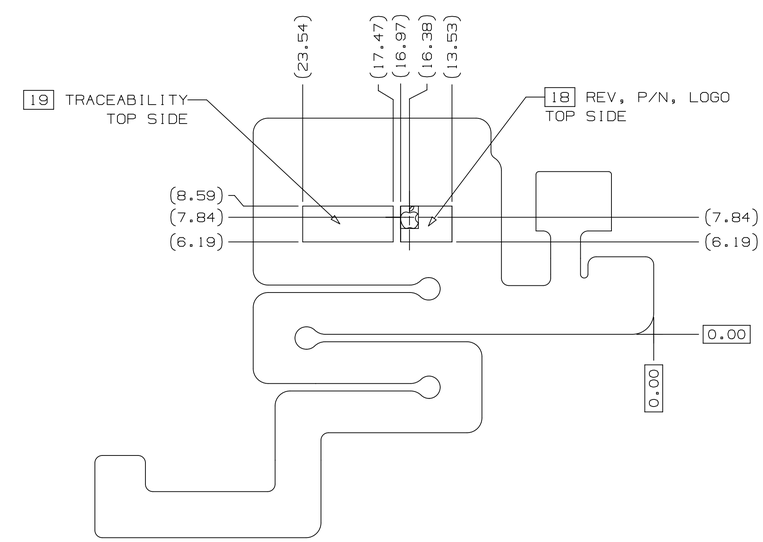

NOTICE OF PROPRIETARY PROPERTY:

THE INFORMATION CONTAINED HEREIN IS THE PROPRIETARY PROPERTY OF APPLE INC. THE POSSESSOR AGREES TO THE FOLLOWING:
(i) TO MAINTAIN THIS DOCUMENT IN CONFIDENCE
(ii) NOT TO REPRODUCE OR COPY IT
(iii) NOT TO REVEAL OR PUBLISH IT IN WHOLE OR PART
(iv) ALL RIGHTS RESERVED

Apple Inc.

SIZE	DRAWING NUMBER	REV.
D	056-18341	22
SCALE: NONE	SHT 6 OF 7	

STACK UP

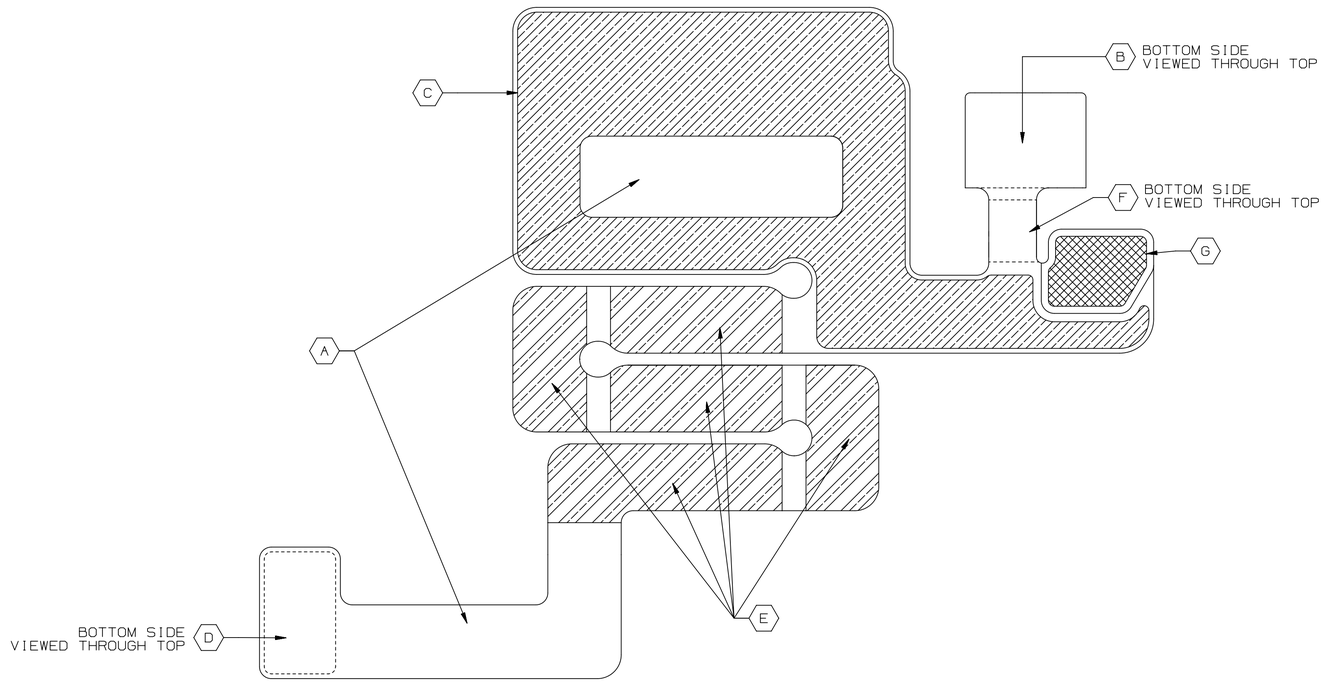

LAYER NAME	2 LAYER		2 LAYER ALS		2 LAYER + PSA		B2B AREA		STIFFENER TOP		ALS BEND PROTECTIVE STIFFENER		STIFFENER ENCAP	
ZONE	A		B		C		D		E		F		G	
	PRE	POST	PRE	POST	PRE	POST	PRE	POST	PRE	POST	PRE	POST	PRE	POST
ADHESIVE					60	60							20	20
PI STIFFENER + ADHESIVE									30	30			40	40
LPI			20	20			20	20						
PI COVERLAY	12.5	12.5			12.5	12.5			12.5	12.5	12.5	12.5	12.5	12.5
ADHESIVE	25	23			25	23			25	23	25	23	25	23
COPPER	18	16	18	16	18	16	18	16	18	16	18	16	18	16
PI BASE	12.5	12.5	12.5	12.5	12.5	12.5	12.5	12.5	12.5	12.5	12.5	12.5	12.5	12.5
COPPER	18	16	18	16	18	16	18	16	18	16	18	16	18	16
ADHESIVE	25	23	25	23	25	23	25	23	25	23	25	23		
PI COVERLAY	12.5	12.5	12.5	12.5	12.5	12.5	12.5	12.5	12.5	12.5	12.5	12.5		
LPI													20	20
PI STIFFENER + ADHESIVE			100	100							40	40		
SUS STIFFENER ADHESIVE							60	45						
SUS STIFFENER							75	75						
THICKNESS	(123.5)	115.5±20 (FAI 2) (SPC A)	(206.0)	200.0±20 (FAI 3) (SPC B)	(183.5)	175.5±20 (FAI 4) (SPC C)	(241.0)	220.0±25 (FAI 5) (SPC D)	(173.5)	145.5±20 (FAI 6) (SPC E)	(163.5)	155.5±20 (FAI 7) (SPC F)	(166.0)	160.0±30 (FAI 8) (SPC G)

NOTICE OF PROPRIETARY PROPERTY:

THE INFORMATION CONTAINED HEREIN IS THE PROPRIETARY PROPERTY OF APPLE INC. THE POSSESSOR AGREES TO THE FOLLOWING:
(i) TO MAINTAIN THIS DOCUMENT IN CONFIDENCE
(ii) NOT TO REPRODUCE OR COPY IT
(iii) NOT TO REVEAL OR PUBLISH IT IN WHOLE OR PART
(iv) ALL RIGHTS RESERVED

Apple Inc.

SIZE	DRAWING NUMBER	REV.
D	056-18341	22
SCALE: NONE	SHT 7 OF 7	