REV	ECO#	DESCRIPTION OF REVISION
A	0057326285	PRODUCTION RELEASE. PREVIOUS REVISION 35 ZACH_YUAN 08/08/24

NOTES: (UNLESS OTHERWISE SPECIFIED)

1. GEOMETRIC DATA FILES PROVIDED BY APPLE INC. SHALL BE USED FOR MASTER DATA. A DRAWING OF EQUAL FILENAME AND REVISION TO THE GEOMETRIC DATA SHALL BE USED TO DETERMINE GEOMETRIC CHARACTERISTICS AND TOLERANCES. DRAWING DIMENSIONS ARE SUBORDINATE TO GEOMETRIC DATA UNLESS SPECIFIED ON DRAWING TO BE MASTER, AS MAY BE THE CASE OF CABLE LENGTHS OR TABULATED VARIABLE DIMENSIONS. THE SUPPLIER MUST COMPLY WITH THE STANDARDS PERTAINING TO THE TOLERANCE METHOD APPLIED.

2. GD&T - GEOMETRIC TOLERANCE METHODS IN ACCORDANCE TO ASME Y14.5-2009. DATUM REFERENCE FRAMES RANK AS DATUM A PRIMARY, B SECONDARY AND C TERTIARY. FEATURE CONTROL FRAMES MAY RE-ORDER DATUMS PER THE FEATURES DATUM DEPENDENCE. DIMENSIONS THAT LOCATE GEOMETRIC TOLERANCE CHARACTERISTICS ARE BASIC (EXACT). NO TOLERANCES APPLY TO BASIC DIMENSIONS.

3. DIRECT TOLERANCE DIMENSIONING - INTERPRET DIMENSIONS THAT DO NOT LOCATE GD&T CHARACTERISTICS OR GD&T CONTROLLED FEATURES AS THE DIRECT TOLERANCE DIMENSION SYSTEM. THE LOCAL PLUS+/MINUS-, LOCAL LIMIT AND TITLE BLOCK TOLERANCES APPLY.

4. IN THE ABSENCE OF DRAWING DIMENSIONS AND DATUMS, THE GEOMETRIC DATA IS BASIC. THE PLANES OF THE ABSOLUTE COORDINATE SYSTEM DENOTE THE DATUM REFERENCE PLANES AS X-Y = DATUM A, Y-Z = B AND X-Z = C. ALL GEOMETRIC DATA SURFACES ⌓ 0.2 A B C.

5. PERFECT ORIENTATION AND/OR PERFECT LOCATION AT MMC AS REQUIRED FOR THE INTERRELATIONSHIP OF ALL DATUM FEATURES OF SIZE.

6. ON PARTS SUBJECT TO FREE STATE VARIATION, ALL TOLERANCES APPLY WHEN THE PART IS RESTRAINED ACCORDING TO FUNCTIONAL MATING CONDITIONS AS DEFINED BY THE DATUM REFERENCE FEATURE RANK OR FEATURE CONTROL FRAME DATUM RANK PER THE FEATURE INSPECTED. CONSULT PROPER APPLE INC. MANUFACTURING QUALITY ENGINEER (MQE) FOR APPROVAL/CLARIFICATION ON INDIVIDUAL PARTS.

7. TOLERANCES DESIGNATED WITH THE SYMBOL SPC SHALL BE PRODUCED WITH STATISTICAL TOLERANCE PROCESS CONTROLS. IN ORDER TO USE THE TOLERANCE ON A FEATURE, THE STATISTICAL PROCESS (CP, CPK, ETC) OF THE PART MUST BE VALIDATED AND APPROVED BY AN APPLE INC. MQE.

8. ALL TOOLING, FIXTURING AND OTHER UNIQUE ITEMS THAT ARE USED TO CREATE THIS PART ARE THE PROPERTY OF APPLE INC. AND SHALL BE PERMANENTLY MARKED WITH APPLE INC.s NAME AND APPROPRIATE APPLE INC. PART NUMBER.

9. THE DESIGN OF ALL TOOLING OR FIXTURING REQUIRED FOR THE MANUFACTURING OR VERIFICATION OF THE PART SHALL BE APPROVED BY THE APPROPRIATE APPLE INC. ENGINEER PRIOR TO TOOL OR FIXTURE FABRICATION.

10. ALL HOMOGENEOUS MATERIALS MUST COMPLY WITH THE FOLLOWING ENVIRONMENTAL SPECIFICATIONS:
    * APPLE INC. REGULATED SUBSTANCES SPECIFICATION, 069-0135

    ALL ADHESIVES, COATINGS AND PAINTS, PRINTING INKS, AND CLEANING AGENTS USED IN THE MANUFACTURING OF THIS PART MUST COMPLY WITH THE APPLE VOC SPECIFICATION, 099-22549

    ALL MATERIALS WITH RECYCLED OR RENEWABLE CONTENT MUST COMPLY WITH THE APPLE RECYCLED & RENEWABLE MATERIAL SPECIFICATION, 099-15583

11. REFER TO THE PCB RELEASE PACKAGE PROVIDED BY APPLE INC. FOR MASTER GEOMETRY DATA. THIS DRAWING IS SUPPLEMENTAL TO THE MASTER DATA AND TO BE USED TO INDICATE CRITICAL MECHANICAL FEATURES AND TOLERANCES. TOLERANCES ON THIS DRAWING ARE ONLY INTENDED FOR DIMENSIONS ON THIS DRAWING AND NOT FOR ALL DATA IN THE RELEASE PACKAGE.

12. REFER TO APPLE INC. SPECIFICATION DOCUMENT 080-2265 FOR DESIGN REQUIREMENTS
    REFER TO APPLE INC. SPECIFICATION DOCUMENT 080-3842 FOR CONNECTOR INSPECTION REQUIREMENTS
    REFER TO APPLE INC. SPECIFICATION DOCUMENT 062-9728 FOR SAFETY REQUIREMENTS

13. FLEX 4 LAYERS: SEE SHEET 2 FOR THICKNESS & LAYER TRANSITION DETAILS
    COPPER MATERIAL: HYPER ANNEALED (HA) COPPER.

14. ALL DESIGNATED MAX HEIGHTS ARE TO INCLUDE THE COMPONENT AT ITS MAX SIZE, SOLDER PASTE AND WARPAGE. HEIGHT MEASUREMENT IS TAKEN FROM TOP OF SOLDERMASK.

15. COVERLAY: KAPTON MBC BLACK FILM OR PYRALUX HXC OR HXI COVERLAY.

16. UNLESS OTHERWISE INDICATED, ALL PANEL TABS TO BE 0.20 mm MAX.

17. VENDOR NAME/INFO, TRACKING CODE, BOARD APN & APPLE INC. LOGO ALLOWED ONLY IN REGIONS SHOWN. PRINT WITH PERMANENT WHITE INK.

18. DO NOT PRE-BEND IN LOCATIONS SHOWN.

19. PRE-BEND IN LOCATIONS SHOWN. PRIOR TO SHIPMENT PRE-FOLD FLEX AND SHIP FLAT. CYCLE TEST THE INDICATED BENDS ON A LOT BASIS PER APPLE INC. SPECIFICATION DOCUMENT 080-2265. USE MANDREL OF INDICATED RADIUS FOR BENDING.

20. B2B STIFFENER:
    SUS MATERIAL: SUS 316L-80RC 1/2H 80RC AASM 088-06576, 0.075 ±0.01 mm THICK
    THIS MATERIAL MUST SATISFY THE CERTIFICATION REQUIREMENTS FOR 80% RECYCLED ALLOY BY WEIGHT, PER ISO 14021:2016 SECTION 7.8 (AS ADDITIONALLY DESCRIBED IN 099-15583).
    OPTION A: STAL 316L-1/2H
    OPTION B: JX NK316L-1/2H
    HARDNESS: 1/2H 200-400 HV. MEASURE AT LOCATION INDICATED.
    NO VISIBLE GRAIN DIRECTION.
    BURR TO FACE AWAY FROM FLEX: 0.03 mm MAX BURR HEIGHT.
    FINISH 1 μm - 5 μm SEMI-BRIGHT NICKEL, PRE-PLATING.
    GLOSS AT 60°: 325 ±125 GU
    ROUGHNESS: 0.18 ±0.13 μm Sa
    STIFFENERS MUST BE INSPECTED AT SUS STIFFENER OQC AND FLEX IQC ON A LOT BASIS AND APPROVED BY APPLE MQE. COUPON LEVEL TESTING ACCEPTED.
    STIFFENER WITH 0.060 ±0.01 mm THICK TSC200 CONDUCTIVE ADHESIVE.
    BOARD-BOARD CONNECTOR STIFFENER MUST BE ELECTRICALLY CONNECTED TO DGND.

21. E85 SEAL TESTING (TEST PRIOR TO SHIPMENT)
    TESTED 100%: TEST AT 0.60 BAR; LEAK RATE MUST BE BELOW 0.05 SCCM.
    TESTED ON 32 PCS PER BATCH: TEST AT 0.60 BAR; LEAK RATE MUST BE BELOW 0.05 SCCM AFTER THE FOLLOWING STRESSES:
    -72 HRS HEAT SOAK
    -TEMPERATURE AND HUMIDITY CYCLING

22. BONDING SHEET 15 μm: NIKKAN SAFL 15(PY)UV OR DUPONT GFL0015UV
    BONDING SHEET 30 μm: NIKKAN SAFL 30(PY)UV OR DUPONT GFL0030UV

23. ATTACH BAR CODE STICKER AT APPROXIMATE SIZE AND LOCATION.
    USE APPLE FLEX DFM APPROVED CODE.
    NO OVERHANGING ADHESIVE - KEEP ADHESIVE PORTION ON THE STICKER ON THE FLEX.

24. PERFORM DESTRUCTIVE PULL TESTING ON CLIP FOR SHEAR STRENGTH IN X-Y PLANE IN INDICATED DIRECTION. MEASURE ON A LOT BASIS. PULL FORCE MUST BE GREATER THAN 5 N. TEST FIXTURES MUST BE APPROVED BY APPLE MQE.

    PERFORM DESTRUCTIVE PEEL TESTING ON CLIP BY PULLING NORMAL TO X-Y PLANE. MEASURE ON A LOT BASIS ACCORDING TO DOCUMENT 080-03969. UNLESS OTHERWISE SPECIFIED. TEST FIXTURES MUST BE APPROVED BY APPLE MQE.

25. ADHESIVE MATERIAL: NITTO DENKO 56105 (NSS), 0.05 mm THICK, COLOR: CLEAR.

26. ADHESIVE MATERIAL: NITTO DENKO 56110 (NSS), 0.1 mm THICK, COLOR: CLEAR.

27. CONDUCTIVE ADHESIVE: 3M 9701H-50 THICKNESS 0.050 ±0.010 mm, COLOR: GRAY.

28. CONDUCTIVE ADHESIVE: 3M 9701H-100 THICKNESS 0.100 ±0.010 mm, COLOR: GRAY.

29. INSPECT AND MEASURE AFTER BENDING AT FATP BEFORE SYSTEM ASSEMBLY.

30. RELEASE LINER: PET, 0.036-0.057 mm THICK, TRANSLUCENT RED
    RELEASE LINER TO COMPLETELY COVER ADHESIVE.
    ADHESIVE SQUEEZE OUT NOT TO EXCEED 0.1 mm BEYOND RELEASE LINER OUTLINE.
    MATERIAL: RPT50ZC#EE (PET) OR USE APPLE APPROVED MATERIAL.

31. APPLY ENCAPSULATION TO COMPONENTS AS INDICATED.
    ENCAPSULATION MATERIAL: POR COLLTECH CT2288
    - COMPLETELY COVER ALL COMPONENTS AND INSPECT UNLESS OTHERWISE SPECIFIED.
    - ENCAPSULATION CONTAMINATION IS NOT ALLOWED IN B2B PINS, TEST POINTS OR EXPOSED COPPER REGIONS USED FOR ASSEMBLY.
    - COMPONENT EDGE OVERFLOW NO GREATER THAN 0.60 mm UNLESS SPECIFIED OTHERWISE.
    - NO CONFORMAL COATING BEYOND FLEX EDGE.
    - ENCAPSULATION SHALL NOT EXCEED THE SPECIFIED HEIGHTS.
    - NO CONFORMAL COATING ON TOP SURFACE OF SWITCHES BEYOND 0.2 mm FROM DIE EDGE. UP TO 4 DOTS OF SPUTTER FROM NOZZLE ALLOWABLE. DIAMETER MUST NOT EXCEED 0.2 mm
    - NO CONFORMAL COATING ON TOP SURFACE OF SMT CONTACT PADS. UP TO 4 DOTS OF SPUTTER FROM NOZZLE ALLOWABLE. DIAMETER MUST NOT EXCEED 0.2 mm

32. ALL MATERIALS MUST COMPLY WITH APPLE INC. SPECIFICATION 062-9728, BE UL RECOGNIZED AND MEET THE FOLLOWING REQUIREMENTS:
    * FLEX & STIFFENER MATERIALS MUST HAVE A MINIMUM FLAMMABILITY RATING OF V-2, VTM-2, VW-1 OR BETTER.
    * PCB & FLEX PCB WITH COMPONENTS MUST HAVE MINIMUM FLAMMABILITY RATING OF V-1 OR BETTER.

33. MAXIMUM STRAIN ALLOWED FOR ANY LOCATION ON THE PCBA: ±500 MICROSTRAIN DURING PCB ASSEMBLY, ASSEMBLY PROCESS, SERVICING AND HANDLING. APPLE INC. STANDARD 080-2263 SECTION 4.0 & IPC-JEDEC9704.

34. MIC HOLES REQUIRE PROTECTIVE FILM.
    MATERIAL: SHRETEC 5105SA.
    PEEL OFF FORCE: 70.0 gf MAX. (FAI 14) (DC)

35. USE MIC GLUE DISPENSING PROCESS, FOLLOW CPP.
    GLUE TO FORM COMPLETE SEAL AROUND MIC HOLE.

36. MIC 4 BENT SUS STIFFENER:
    SUS MATERIAL: SUS 316L-80RC 1/2H 80RC AASM 088-06576, 0.05 ±0.01 mm THICK
    THIS MATERIAL MUST SATISFY THE CERTIFICATION REQUIREMENTS FOR 80% RECYCLED ALLOY BY WEIGHT, PER ISO 14021:2016 SECTION 7.8 (AS ADDITIONALLY DESCRIBED IN 099-15583).
    OPTION A: STAL 316L-1/2H
    OPTION B: JX NK316L-1/2H
    HARDNESS: 1/2H 200-400 HV. MEASURE AT LOCATION INDICATED.
    SUS TO UNDERGO PLASMA CLEANING TREATMENT PRIOR TO APPLICATION.
    ADHESIVE MATERIAL: TESA HAF 58471, 0.030 mm THICK.
    ADHESIVE SQUEEZE-OUT TO BE LESS THAN 0.45 mm.
    BURR SIDE MUST BE OPPOSITE FLEX SURFACE.
    STIFFENER TO BE PRE-BENT AT FLEX VENDOR AND REMAIN BENT DURING SHIPPING.

37. ANT 9 SUS STIFFENER:
    SUS MATERIAL: SUS 316L-80RC 1/2H 80RC AASM 088-06576, 0.075 ±0.01 mm THICK
    THIS MATERIAL MUST SATISFY THE CERTIFICATION REQUIREMENTS FOR 80% RECYCLED ALLOY BY WEIGHT, PER ISO 14021:2016 SECTION 7.8 (AS ADDITIONALLY DESCRIBED IN 099-15583).
    HARDNESS: 1/2H 200-400 HV. MEASURE AT LOCATION INDICATED.
    STIFFENER IS TO BE SOLDERED TO FLEX.
    BURR SIDE MUST BE OPPOSITE FLEX SURFACE.

38. DISPENSE E85 FLEX GLUE, FOLLOW CPP.
    GLUE MATERIAL: HENKEL 3848 (65U).

39. PERFORM CROSS SECTION INSPECTION FOR REGION D AND SCREW AREA E85 GLUE OVERFLOW.
    GLUE MUST NOT EXCEED SPECIFIED MAXIMUM THICKNESSES AT MARKED LOCATIONS. MEASURE ON A LOT BASIS.
    NPI:
    32 PIECE SAMPLING FOR OK2BUILD. INCLUDE X-SECTION IMAGES IN REPORT.
    3 PIECE SAMPLING WORST CASE FOR OK2SHIP PER CONFIG. INCLUDE X-SECTION IMAGES IN REPORT.
    MP: 3 PIECE SAMPLING WORST CASE PER SHIFT.

40. ALL GOLD PLATING TO USE 100% RECYCLED GOLD.

41. MEASURE MASS OF ASSEMBLED FLEX (WITHIN 0.01 GRAMS):
    WITH RELEASE LINERS + BARCODE: 1.96 ±0.1 g (FAI 261)
    WITHOUT RELEASE LINERS + BARCODE: 1.94 ±0.1 g (FAI 262)

BENT VIEW
(FOR REFERENCE ONLY)

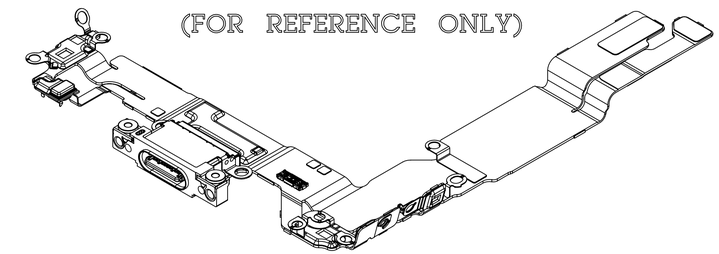

FLAT VIEW
(FOR REFERENCE ONLY)

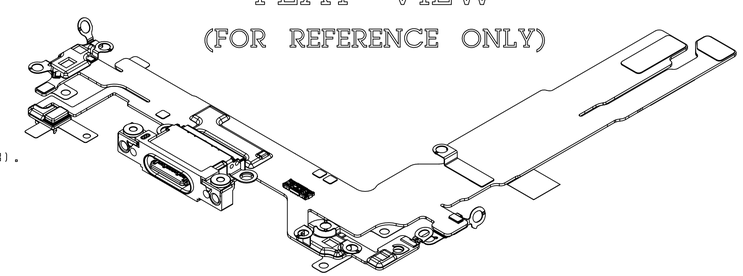

METRIC		Apple Inc.
DRAFTER: APPLE PD	DATE: 03/29/23	NOTICE OF PROPRIETARY PROPERTY: THE INFORMATION CONTAINED HEREIN IS THE PROPRIETARY PROPERTY OF APPLE INC. THE POSSESSOR AGREES TO THE FOLLOWING: (i) TO MAINTAIN THIS DOCUMENT IN CONFIDENCE (ii) NOT TO REPRODUCE OR COPY IT (iii) NOT TO REVEAL OR PUBLISH IT IN WHOLE OR PART (iv) ALL RIGHTS RESERVED
DESIGNER: APPLE PD	DATE: 03/29/23	
DIMENSIONS ARE IN MILLIMETERS TOLERANCES X.X ±0.2 X.XX ±0.20 X.XXX ±0.200 ANGLES ±1.0° DO NOT SCALE DRAWINGS		TITLE: MCO,FLEX,DOCK, D47
		DRAWING NUMBER: 056-20043 — REV.: A
THIRD ANGLE PROJECTION	SIZE: D	SCALE: NONE — SHT 1 OF 15

NX GENERATED

LAYER THICKNESS REGIONS

REGION	A1		A2		A3		A4		A5	
DESCRIPTION	4L BASE FLEX		4L COMPONENTS		4L CONDUCTIVE PSA		4L EXPOSED COPPER		4L PI STIFFENER	
DECAP SIDE	NONE		NONE		NONE		NONE		NONE	
COMPONENT SIDE	NONE		BOTTOM		NONE		BOTTOM		NONE	
	PRE	POST	PRE	POST	PRE	POST	PRE	POST	PRE	POST
PI STIFFENER + ADHESIVE									50.0	50.0
SUS STIFFENER										
STIFFENER ADHESIVE										
COVERLAY	12.0	12.0	12.0	12.0			12.0	12.0	12.0	12.0
ADHESIVE	25.0	22.0	25.0	22.0			25.0	22.0	25.0	22.0
LPI										
ENIG					4.0	4.0				
COPPER 1	18.0	16.0	18.0	16.0	18.0	16.0	18.0	16.0	18.0	16.0
PI BASE	45.0	45.0	45.0	45.0	45.0	45.0	45.0	45.0	45.0	45.0
SHEET BOND ADH	30.0	27.0	30.0	27.0	30.0	27.0	30.0	27.0	30.0	27.0
COPPER 2	12.0	11.0	12.0	11.0	12.0	11.0	12.0	11.0	12.0	11.0
PI BASE	50.0	50.0	50.0	50.0	50.0	50.0	50.0	50.0	50.0	50.0
COPPER 3	12.0	11.0	12.0	11.0	12.0	11.0	12.0	11.0	12.0	11.0
SHEET BOND ADH	15.0	12.0	15.0	12.0	15.0	12.0	15.0	12.0	15.0	12.0
PI BASE	45.0	45.0	45.0	45.0	45.0	45.0	45.0	45.0	45.0	45.0
COPPER 4	18.0	16.0	18.0	16.0	18.0	16.0	18.0	16.0	18.0	16.0
ENIG							4.0	4.0		
LPI			20.0	20.0						
ADHESIVE	25.0	22.0			25.0	22.0			25.0	22.0
COVERLAY	12.0	12.0			12.0	12.0			12.0	12.0
STIFFENER ADHESIVE										
SUS STIFFENER										
PI STIFFENER + ADHESIVE										
TOTAL THICKNESS (μm)	(319.0)	331.0 MAX (FAI 1) (SPC A)	(302.0)	316.0 MAX (FAI 2) (SPC B)	(286.0)	298.0 MAX (FAI 3) (SPC C)	(286.0)	298.0 MAX (FAI 4) (SPC D)	(369.0)	387.0 MAX (FAI 5) (SPC E)

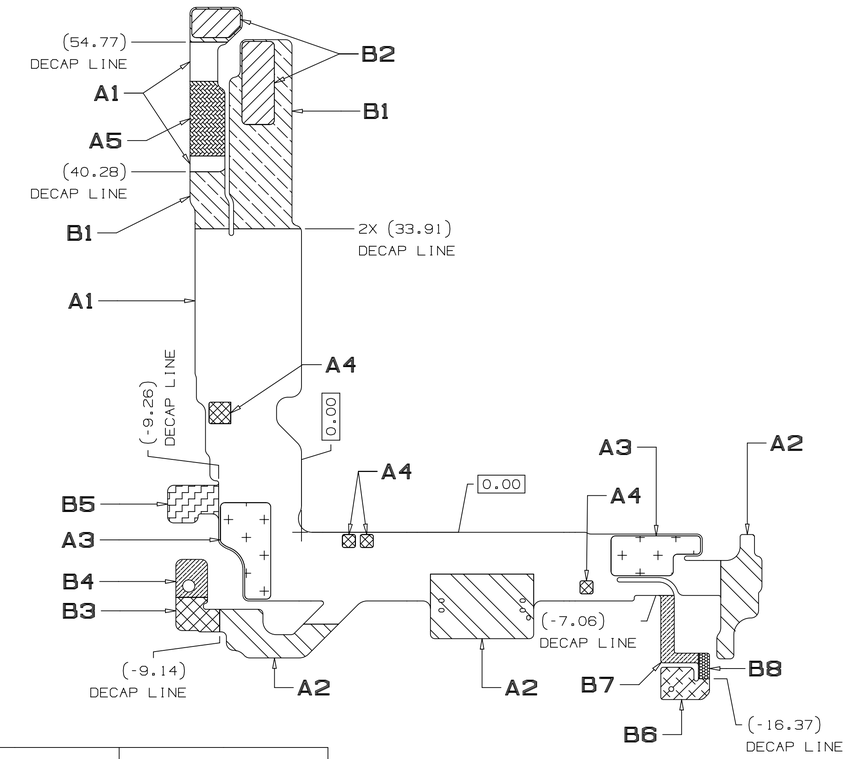

REGION	B1		B2		B3		B4		B5		B6		B7		B8	
DESCRIPTION	3L B2B TAILS		3L B2B		3L ANTENNA 3/9		3L BOT SUS STIFFENER		3L ANTENNA 5		3L MIC4		2L MIC4 TAIL		2L SUS STIFFENER	
DECAP SIDE	BOTTOM		BOTTOM		TOP		TOP		BOTTOM		TOP		BOTH SIDES		BOTH SIDES	
COMPONENT SIDE	NONE		TOP		BOTH SIDES		TOP		TOP		BOTTOM		NONE		NONE	
	PRE	POST	PRE	POST	PRE	POST	PRE	POST	PRE	POST						
SMT CLIP							100.0	100.0								
PI STIFFENER + ADHESIVE																
SUS STIFFENER															50.0	50.0
STIFFENER ADHESIVE															30.0	15.0
SOLDER							60.0	45.0								
COVERLAY	12.0	12.0			12.0	12.0					12.0	12.0	12.0	12.0	12.0	12.0
ADHESIVE	25.0	22.0			25.0	22.0					25.0	22.0	25.0	22.0	25.0	22.0
LPI			20.0	20.0					20.0	20.0						
ENIG							4.0	4.0								
COPPER 1	18.0	16.0	18.0	16.0					18.0	16.0						
PI BASE	45.0	45.0	45.0	45.0					45.0	45.0						
SHEET BOND ADH	30.0	27.0	30.0	27.0					30.0	27.0						
COPPER 2	12.0	11.0	12.0	11.0	12.0	11.0	12.0	9.0	12.0	11.0	12.0	11.0	12.0	11.0	12.0	11.0
PI BASE	50.0	50.0	50.0	50.0	50.0	50.0	50.0	50.0	50.0	50.0	50.0	50.0	50.0	50.0	50.0	50.0
COPPER 3	12.0	11.0	12.0	11.0	12.0	11.0	12.0	11.0	12.0	11.0	12.0	11.0	12.0	11.0	12.0	11.0
SHEET BOND ADH					15.0	12.0	15.0	12.0			15.0	12.0				
PI BASE					45.0	45.0	45.0	45.0			45.0	45.0				
COPPER 4					18.0	16.0	18.0	16.0			18.0	16.0				
ENIG							4.0	4.0								
LPI					20.0	20.0			60.0	60.0	20.0	20.0				
ADHESIVE	25.0	22.0	25.0	22.0									25.0	22.0	25.0	22.0
COVERLAY	12.0	12.0	12.0	12.0									12.0	12.0	12.0	12.0
SOLDER							60.0	45.0								
STIFFENER ADHESIVE			60.0	45.0												
SUS STIFFENER			75.0	75.0			75.0	75.0								
PI STIFFENER + ADHESIVE																
TOTAL THICKNESS (μm)	(241.0)	249.0 MAX (FAI 6) (SPC F)	(359.0)	365.0 MAX (FAI 7) (SPC G)	(209.0)	219.0 MAX (FAI 8) (SPC H)	(455.0)	458.0 MAX (FAI 9) (SPC I)	(247.0)	258.0 MAX (FAI 10) (SPC J)	(209.0)	219.0 MAX (FAI 11) (SPC K)	(148.0)	154.0 MAX (FAI 12) (SPC L)	(228.0)	227.0 MAX (FAI 13) (SPC M)

NOTICE OF PROPRIETARY PROPERTY:

THE INFORMATION CONTAINED HEREIN IS THE PROPRIETARY PROPERTY OF APPLE INC. THE POSSESSOR AGREES TO THE FOLLOWING:
(i) TO MAINTAIN THIS DOCUMENT IN CONFIDENCE
(ii) NOT TO REPRODUCE OR COPY IT
(iii) NOT TO REVEAL OR PUBLISH IT IN WHOLE OR PART
(iv) ALL RIGHTS RESERVED

Apple Inc.

SIZE	DRAWING NUMBER	REV.
D	056-20043	A
SCALE: NONE	SHT 2 OF 15	

NX GENERATED

FLEX OUTLINE

(TOP SIDE)

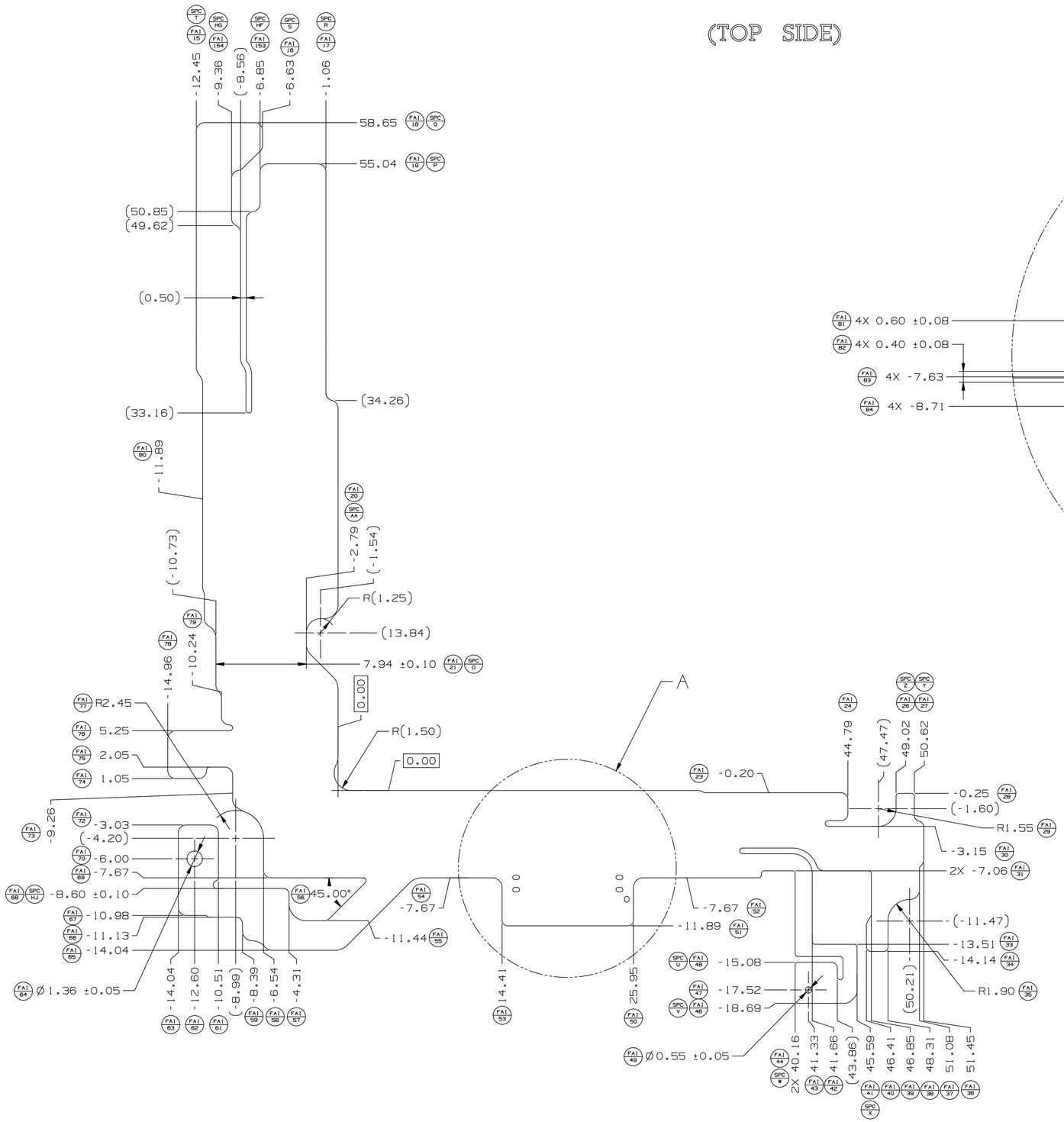

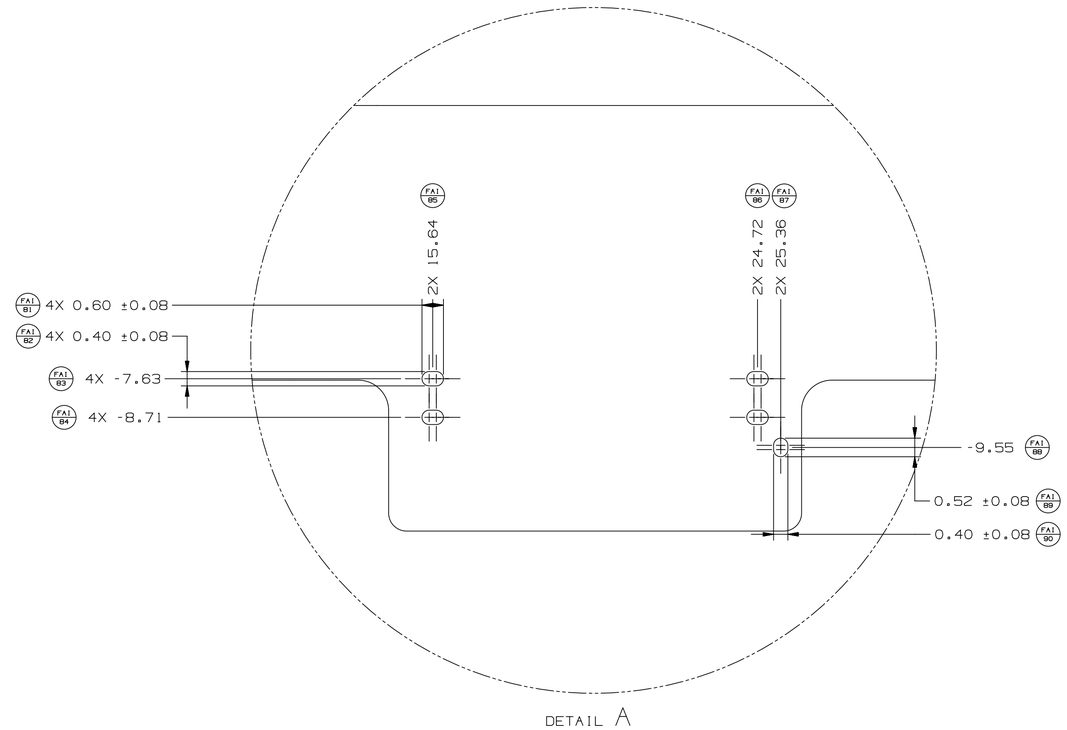

NOTICE OF PROPRIETARY PROPERTY:

THE INFORMATION CONTAINED HEREIN IS THE PROPRIETARY PROPERTY OF APPLE INC. THE POSSESSOR AGREES TO THE FOLLOWING:
(i) TO MAINTAIN THIS DOCUMENT IN CONFIDENCE
(ii) NOT TO REPRODUCE OR COPY IT
(iii) NOT TO REVEAL OR PUBLISH IT IN WHOLE OR PART
(iv) ALL RIGHTS RESERVED

Apple Inc.

SIZE	DRAWING NUMBER	REV.
D	056-20043	A
SCALE: NONE	SHT 3 OF 15	

NX GENERATED

14 COMPONENT KEEPOUT

(TOP SIDE)

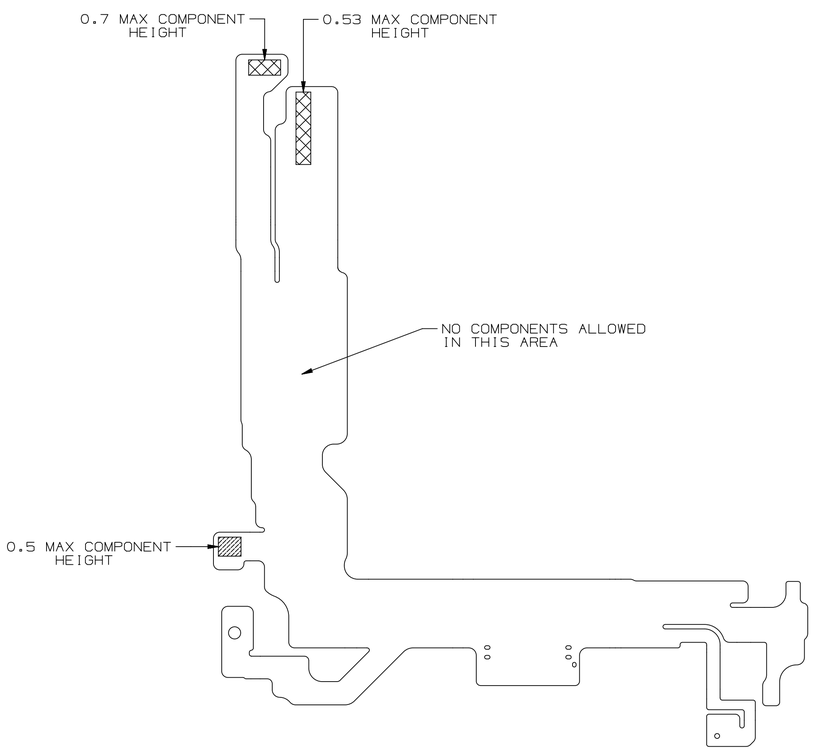

(BOTTOM SIDE, VIEWED THROUGH TOP)

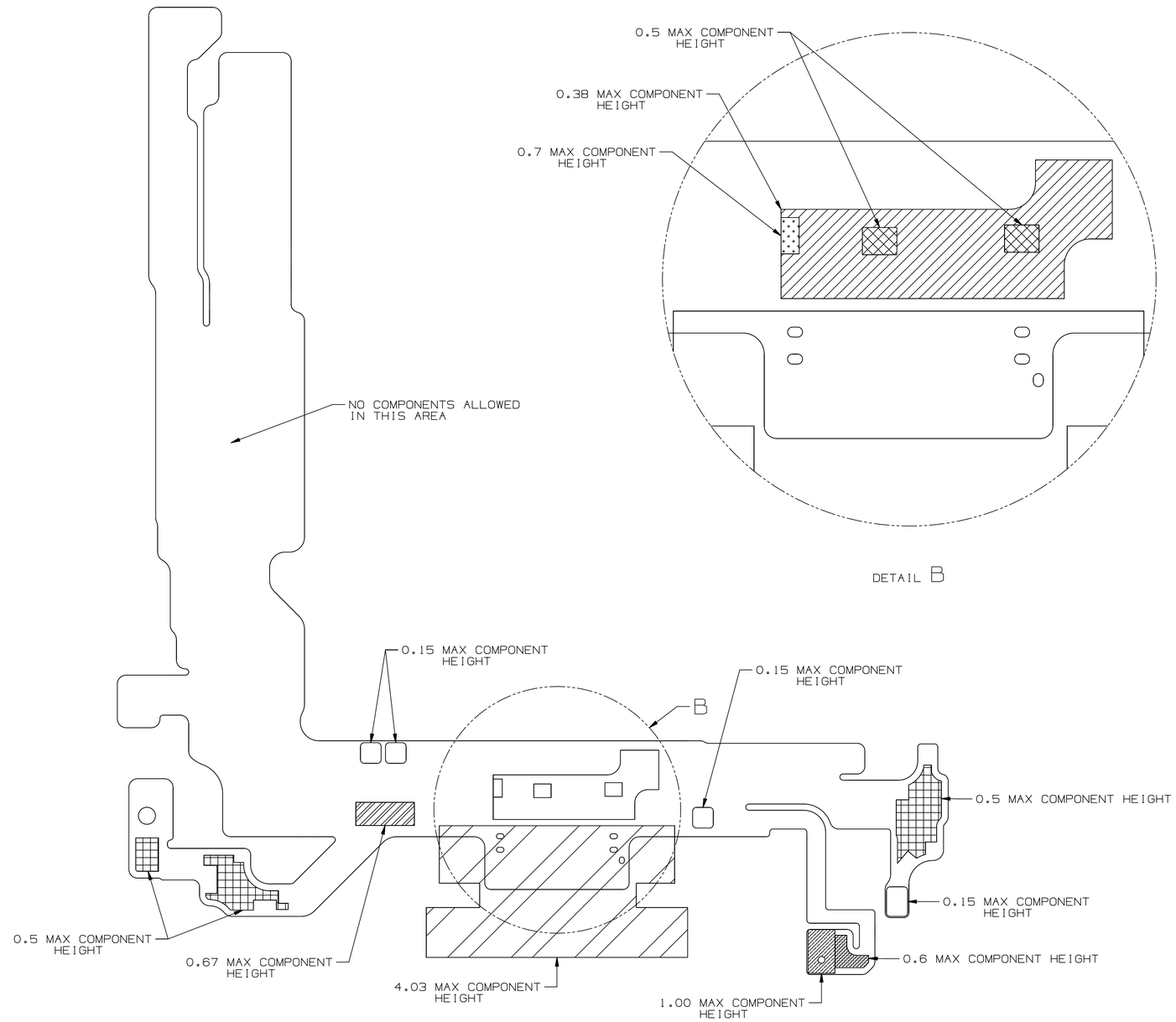

NOTICE OF PROPRIETARY PROPERTY:
THE INFORMATION CONTAINED HEREIN IS THE PROPRIETARY PROPERTY OF APPLE INC. THE POSSESSOR AGREES TO THE FOLLOWING:
(i) TO MAINTAIN THIS DOCUMENT IN CONFIDENCE
(ii) NOT TO REPRODUCE OR COPY IT
(iii) NOT TO REVEAL OR PUBLISH IT IN WHOLE OR PART
(iv) ALL RIGHTS RESERVED

Apple Inc.

SIZE	DRAWING NUMBER	REV.
D	056-20043	A
SCALE: NONE	SHT 4 OF 15	

COMPONENT PLACEMENT

(TOP SIDE)

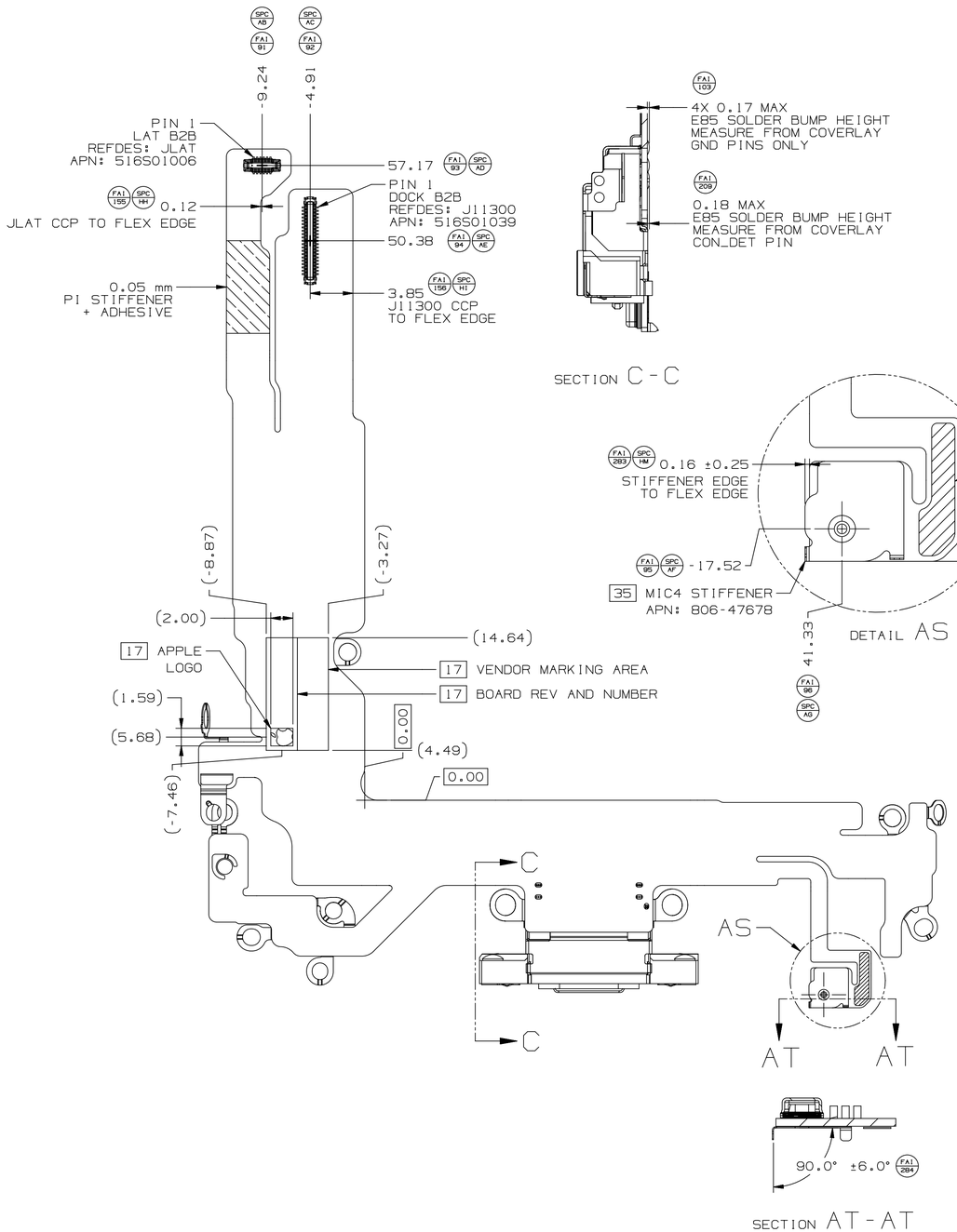

COMPONENT PLACEMENT

(BOTTOM SIDE, VIEWED THROUGH TOP)

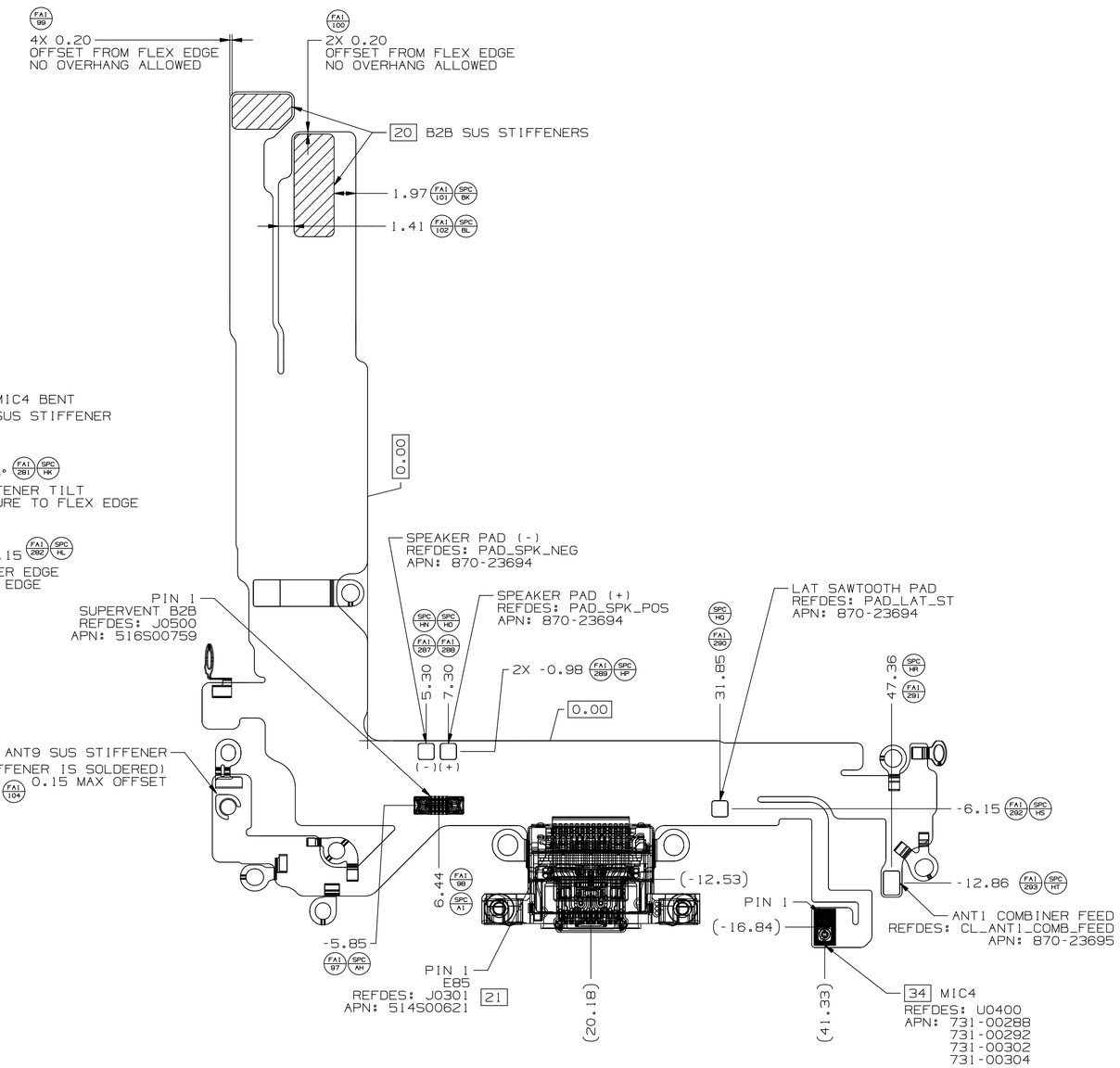

NOTICE OF PROPRIETARY PROPERTY:

THE INFORMATION CONTAINED HEREIN IS THE PROPRIETARY PROPERTY OF APPLE INC. THE POSSESSOR AGREES TO THE FOLLOWING:
(i) TO MAINTAIN THIS DOCUMENT IN CONFIDENCE
(ii) NOT TO REPRODUCE OR COPY IT
(iii) NOT TO REVEAL OR PUBLISH IT IN WHOLE OR PART
(iv) ALL RIGHTS RESERVED

Apple Inc.

SIZE	DRAWING NUMBER	REV.
D	056-20043	A
SCALE: NONE	SHT 5 OF 15	

NX GENERATED

CLIP PLACEMENT AND ORT

(TOP SIDE)

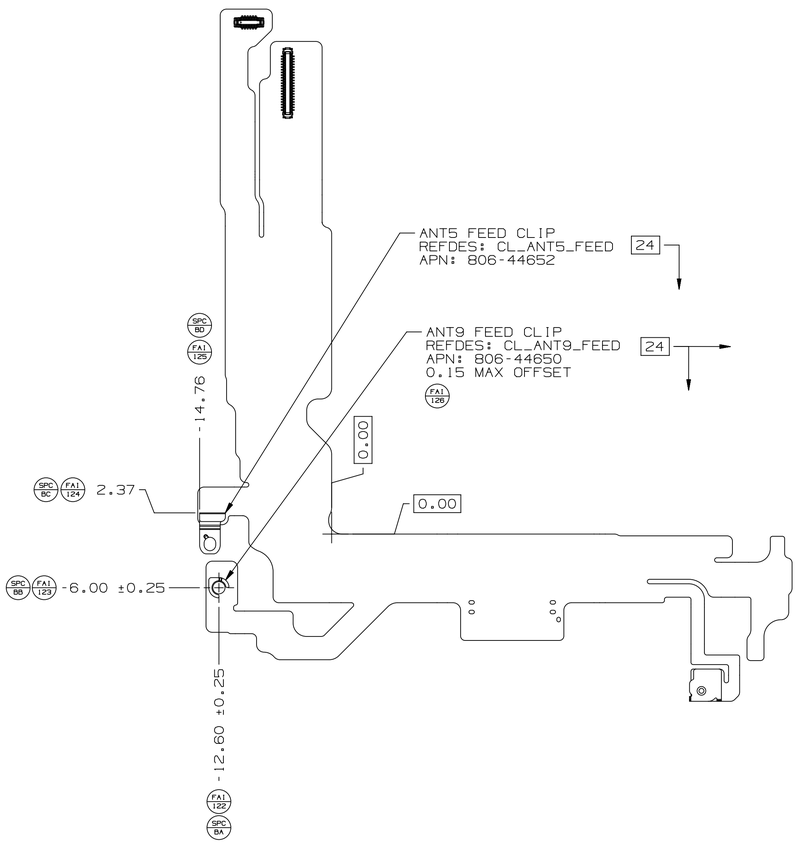

CLIP PLACEMENT AND ORT

(BOTTOM SIDE, VIEWED THROUGH TOP)

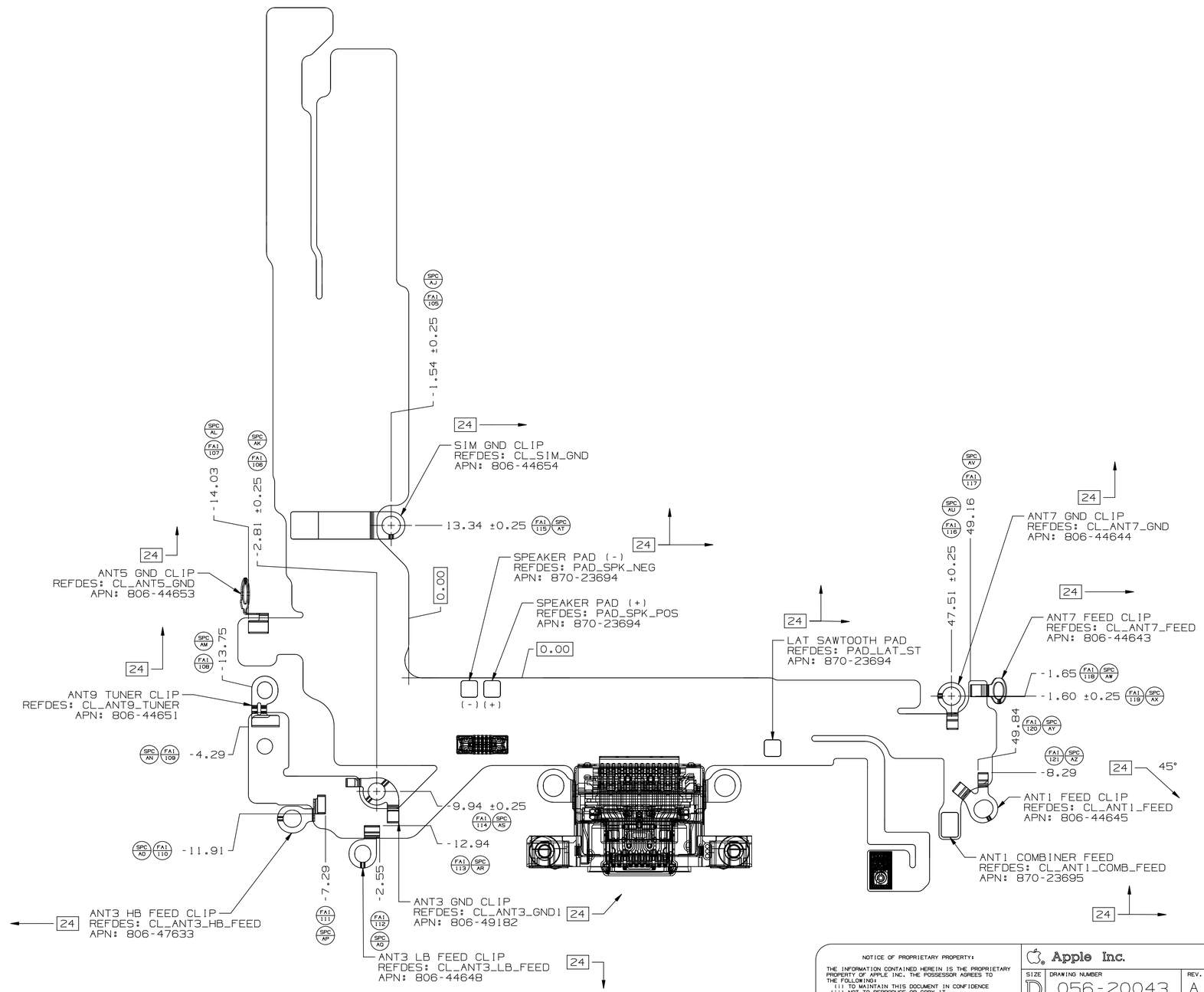

NOTICE OF PROPRIETARY PROPERTY:

THE INFORMATION CONTAINED HEREIN IS THE PROPRIETARY PROPERTY OF APPLE INC. THE POSSESSOR AGREES TO THE FOLLOWING:
(i) TO MAINTAIN THIS DOCUMENT IN CONFIDENCE
(ii) NOT TO REPRODUCE OR COPY IT
(iii) NOT TO REVEAL OR PUBLISH IT IN WHOLE OR PART
(iv) ALL RIGHTS RESERVED

Apple Inc.

SIZE	DRAWING NUMBER	REV.
D	056-20043	A
SCALE: NONE	SHT 6 OF 15	

NX GENERATED

E85 CONTROLS

TOP VIEW

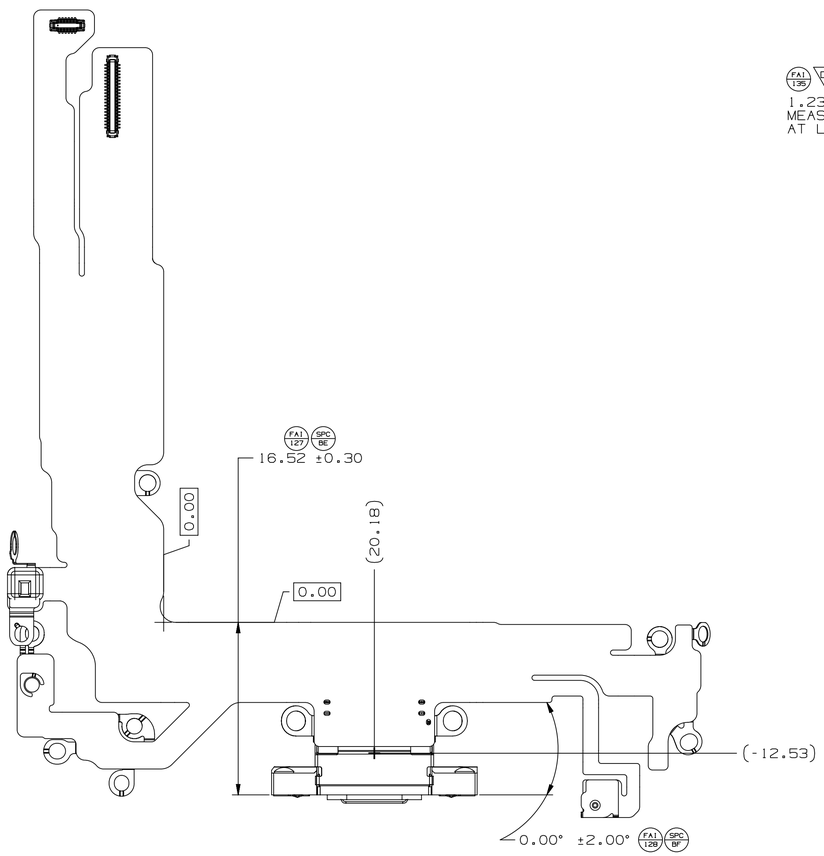

FRONT VIEW

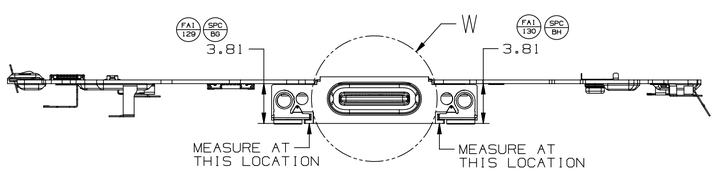

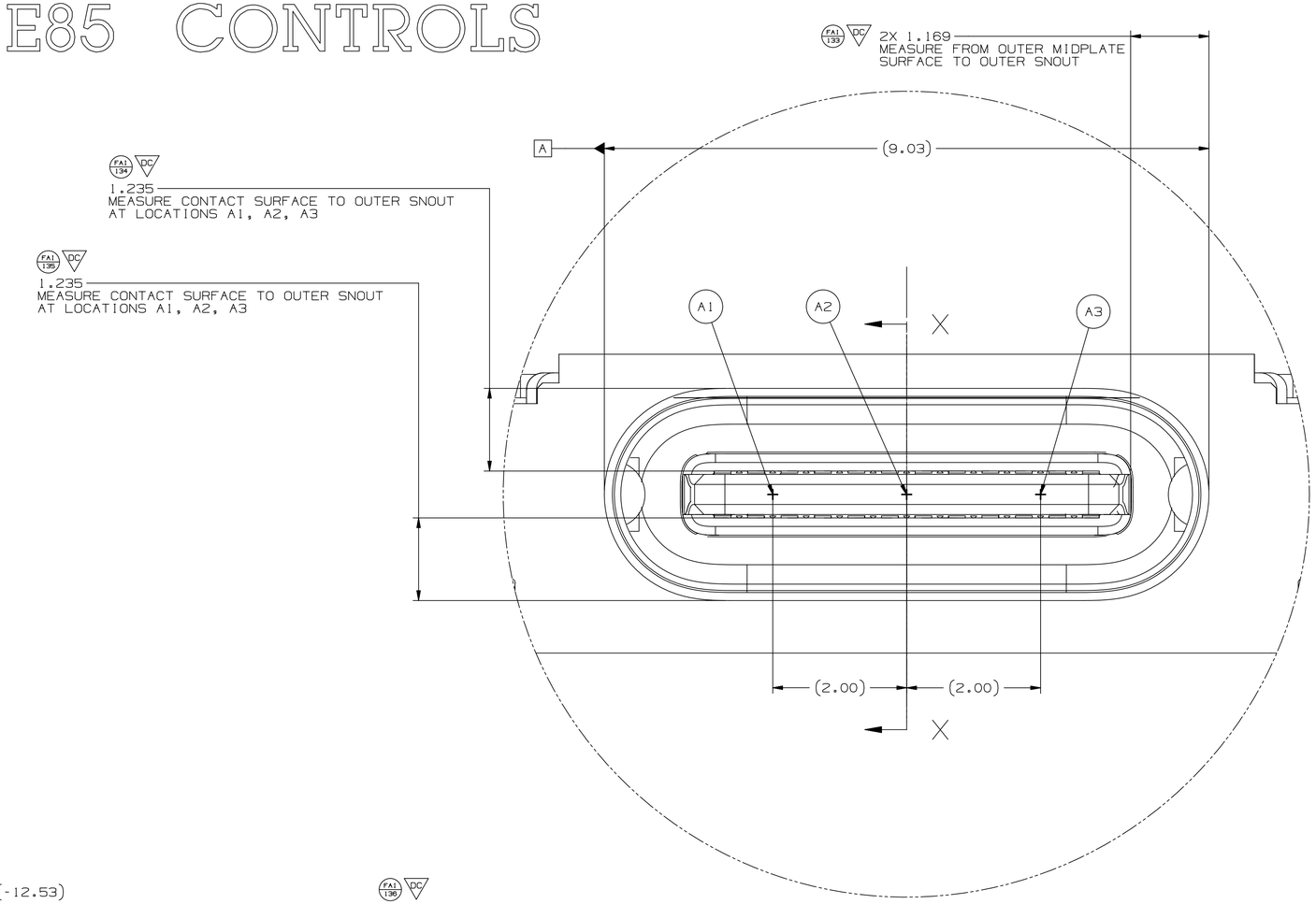

DETAIL W

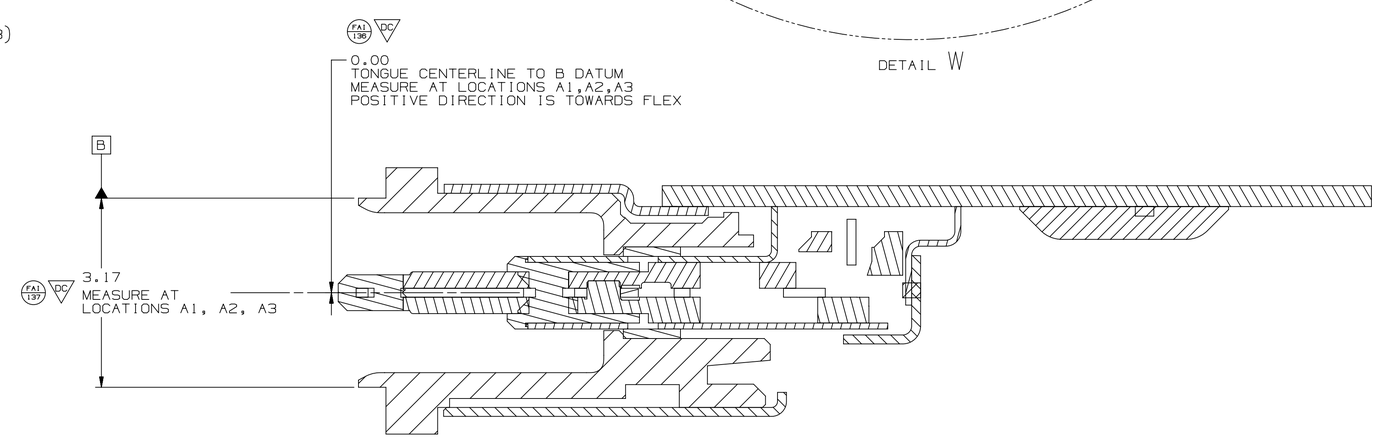

SECTION X - X

NOTICE OF PROPRIETARY PROPERTY:

THE INFORMATION CONTAINED HEREIN IS THE PROPRIETARY PROPERTY OF APPLE INC. THE POSSESSOR AGREES TO THE FOLLOWING:
(i) TO MAINTAIN THIS DOCUMENT IN CONFIDENCE
(ii) NOT TO REPRODUCE OR COPY IT
(iii) NOT TO REVEAL OR PUBLISH IT IN WHOLE OR PART
(iv) ALL RIGHTS RESERVED

Apple Inc.

SIZE	DRAWING NUMBER	REV.
D	056-20043	A
SCALE: NONE	SHT 7 OF 15	

NX GENERATED

ADHESIVES

(TOP SIDE)

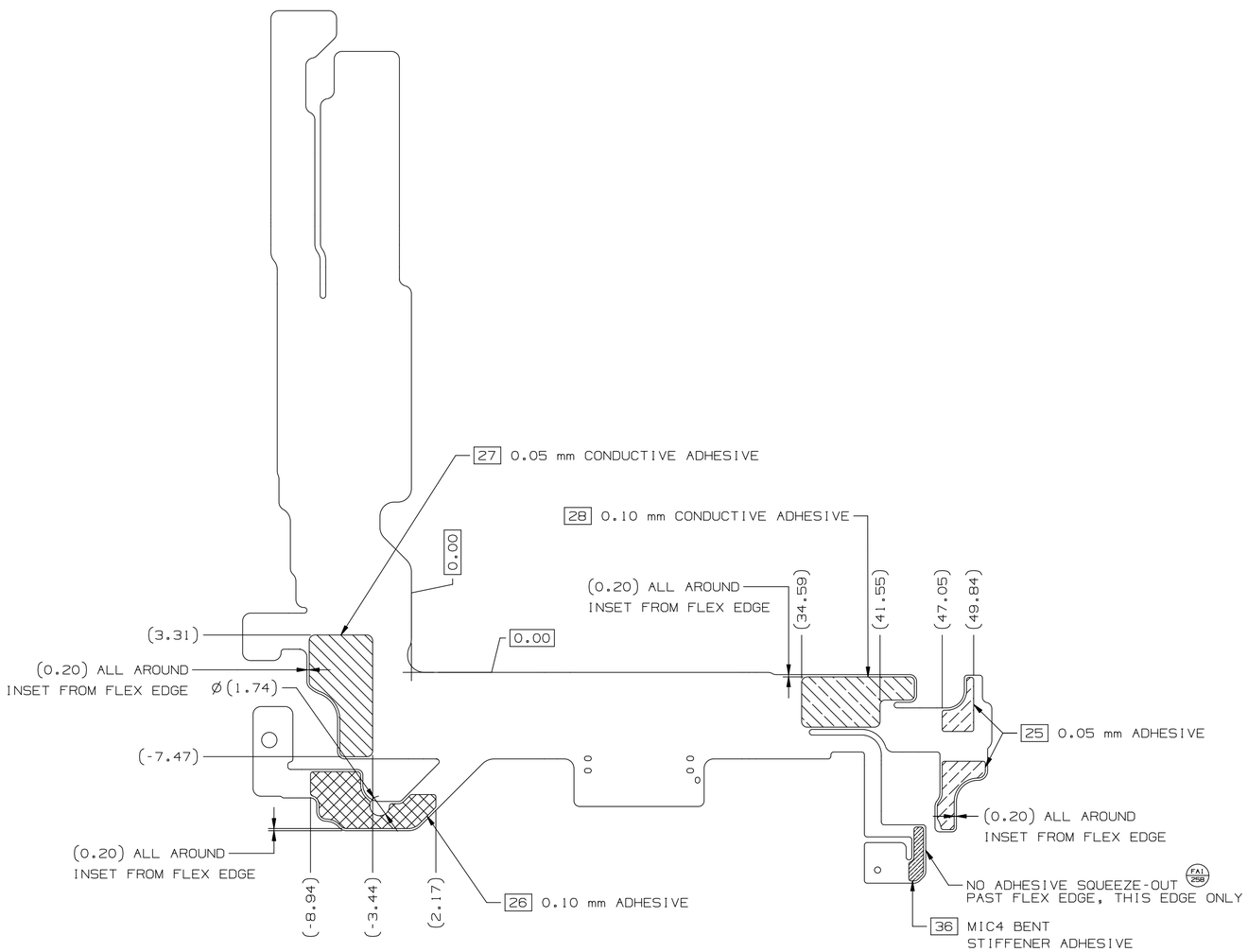

ADHESIVES

(BOTTOM SIDE, VIEWED THROUGH TOP)

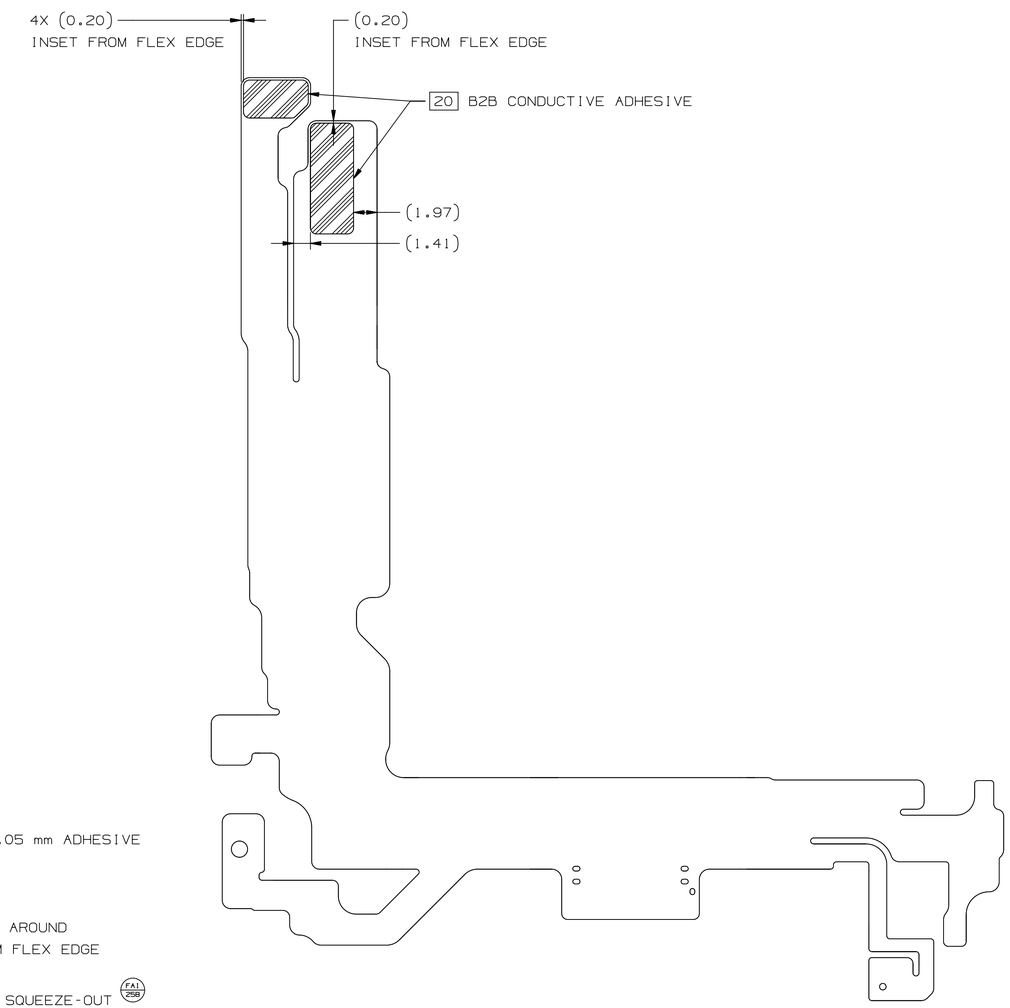

NOTICE OF PROPRIETARY PROPERTY:

THE INFORMATION CONTAINED HEREIN IS THE PROPRIETARY PROPERTY OF APPLE INC. THE POSSESSOR AGREES TO THE FOLLOWING:
(i) TO MAINTAIN THIS DOCUMENT IN CONFIDENCE
(ii) NOT TO REPRODUCE OR COPY IT
(iii) NOT TO REVEAL OR PUBLISH IT IN WHOLE OR PART
(iv) ALL RIGHTS RESERVED

Apple Inc.

SIZE	DRAWING NUMBER	REV.
D	056-20043	A
SCALE: NONE	SHT 8 OF 15	

NX GENERATED

ADHESIVE LINERS

(TOP SIDE)

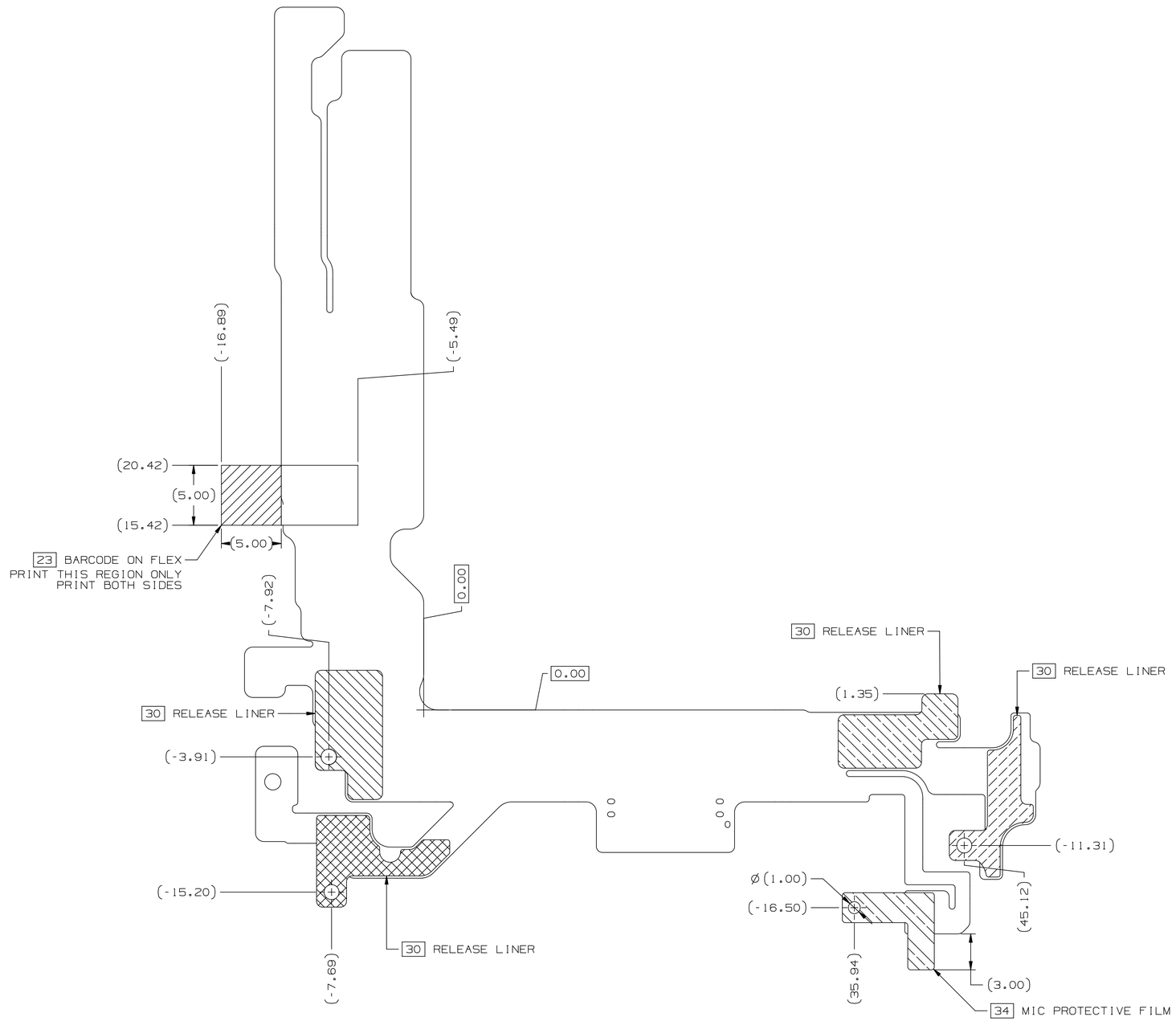

NOTICE OF PROPRIETARY PROPERTY:

THE INFORMATION CONTAINED HEREIN IS THE PROPRIETARY PROPERTY OF APPLE INC. THE POSSESSOR AGREES TO THE FOLLOWING:
(i) TO MAINTAIN THIS DOCUMENT IN CONFIDENCE
(ii) NOT TO REPRODUCE OR COPY IT
(iii) NOT TO REVEAL OR PUBLISH IT IN WHOLE OR PART
(iv) ALL RIGHTS RESERVED

Apple Inc.

SIZE	DRAWING NUMBER	REV.
D	056-20043	A
SCALE: NONE	SHT 9 OF 15	

NX GENERATED

16

VESTIGE TABS

ALLOWABLE REGIONS

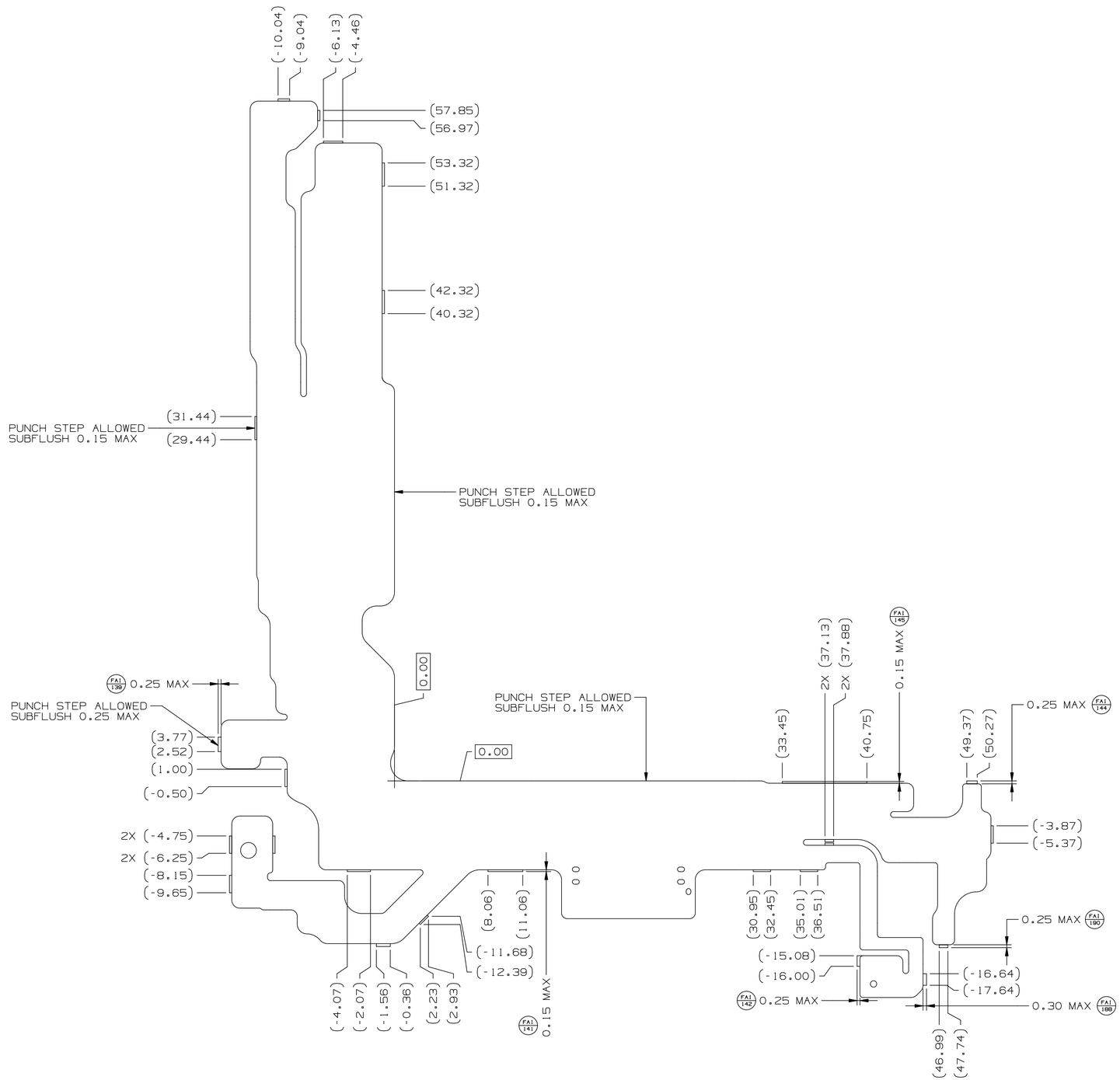

NOTICE OF PROPRIETARY PROPERTY:

THE INFORMATION CONTAINED HEREIN IS THE PROPRIETARY PROPERTY OF APPLE INC. THE POSSESSOR AGREES TO THE FOLLOWING:
(i) TO MAINTAIN THIS DOCUMENT IN CONFIDENCE
(ii) NOT TO REPRODUCE OR COPY IT
(iii) NOT TO REVEAL OR PUBLISH IT IN WHOLE OR PART
(iv) ALL RIGHTS RESERVED

Apple Inc.

SIZE	DRAWING NUMBER	REV.
D	056-20043	A
SCALE: NONE	SHT 10 OF 15	

NX GENERATED

31 ENCAPSULANT

(BOTTOM SIDE, VIEWED THROUGH TOP)

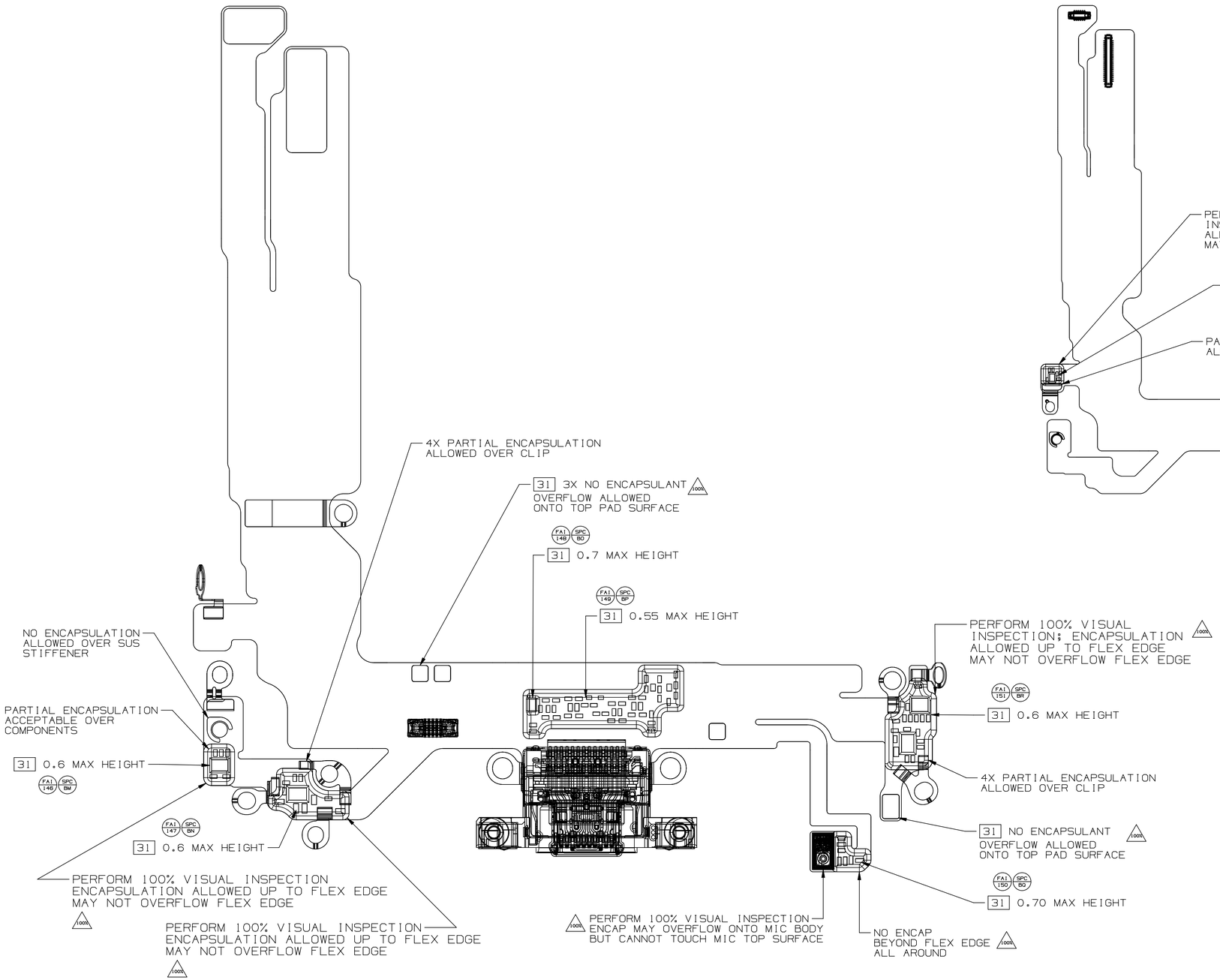

(TOP SIDE)

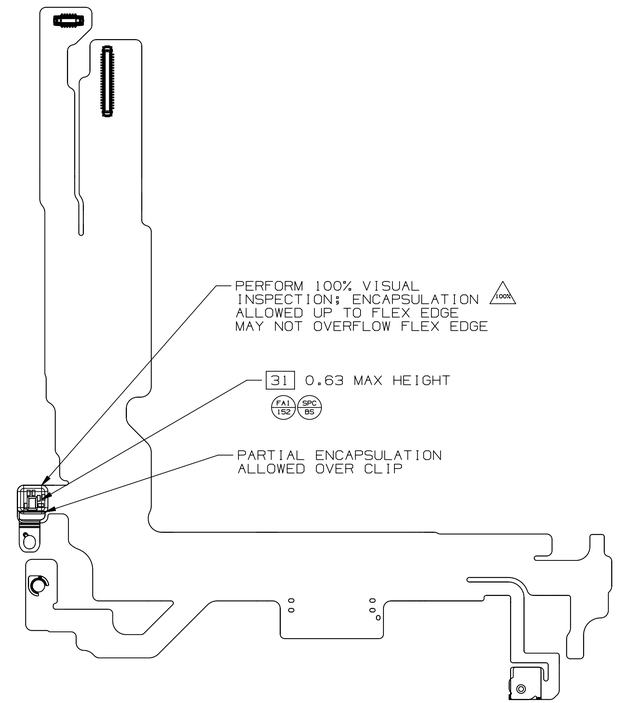

NOTICE OF PROPRIETARY PROPERTY:
THE INFORMATION CONTAINED HEREIN IS THE PROPRIETARY PROPERTY OF APPLE INC. THE POSSESSOR AGREES TO THE FOLLOWING:
(i) TO MAINTAIN THIS DOCUMENT IN CONFIDENCE
(ii) NOT TO REPRODUCE OR COPY IT
(iii) NOT TO REVEAL OR PUBLISH IT IN WHOLE OR PART
(iv) ALL RIGHTS RESERVED

Apple Inc.

SIZE	DRAWING NUMBER	REV.
D	056-20043	A
SCALE: NONE	SHT 11 OF 15	

NX GENERATED

21 38 E85 FLEX GLUE OVERFLOW

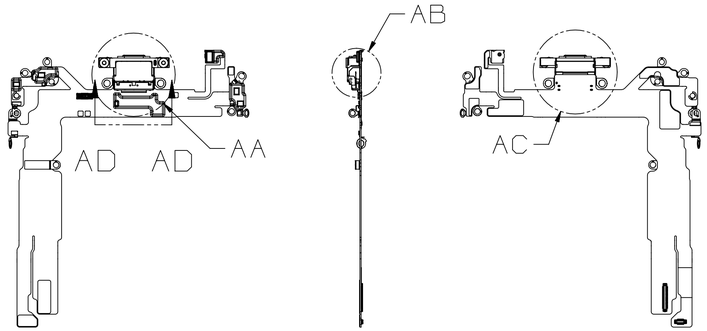

BOTTOM VIEW

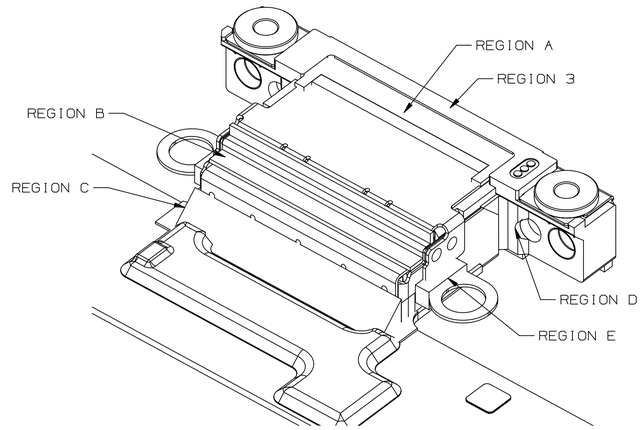

TOP VIEW

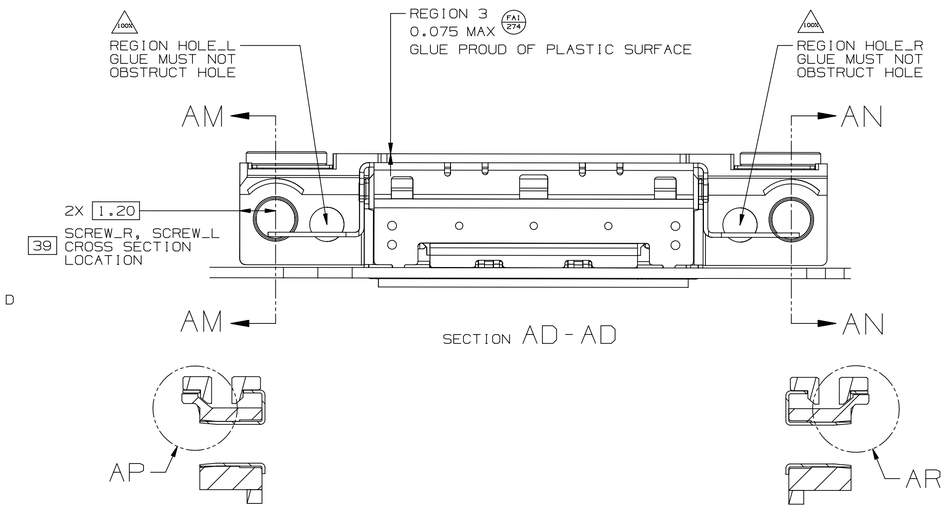

SECTION AM - AM

RIGHT VIEW

SECTION AN - AN

REGION A COSMETIC BINNING: FAI 294
SAMPLE 10 FLEXES PER LOT.
IF ANY BIN D OR F FLEXES APPEAR IN THE 10 SAMPLES:
* 100% AVI SCREEN THE LOT.
* DO NOT SHIP >0.5% BIN D OR ANY BIN F PER LOT.
IF NO BIN D OR F FLEXES APPEAR IN THE 10 SAMPLES:
* SHIP THE ENTIRE LOT.

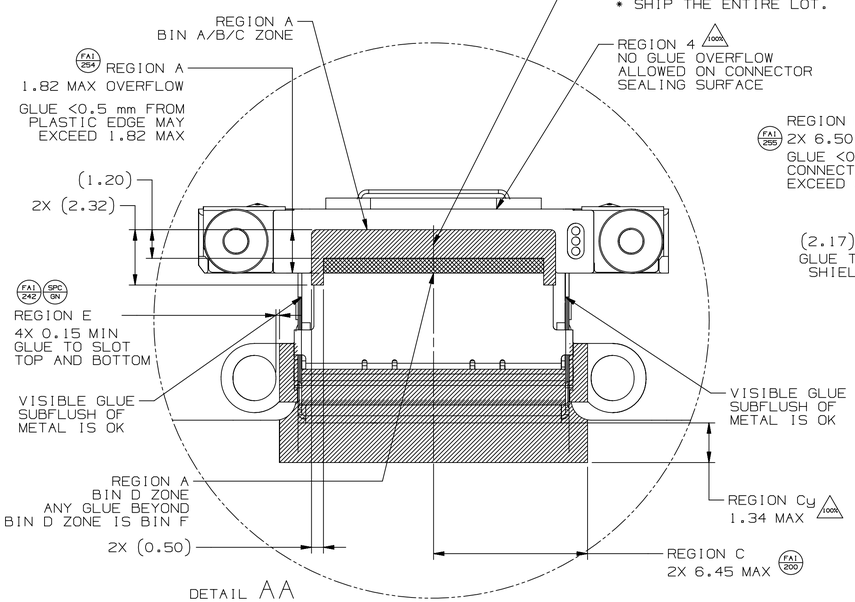

DETAIL AA

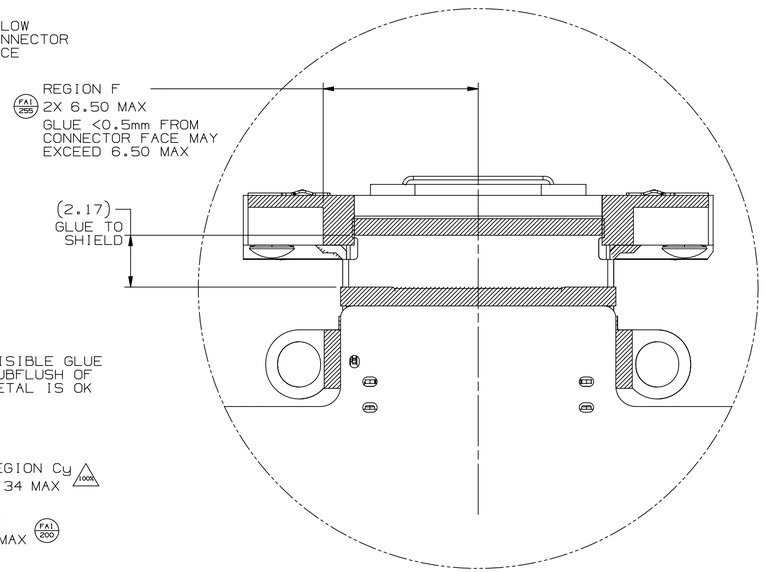

DETAIL AC

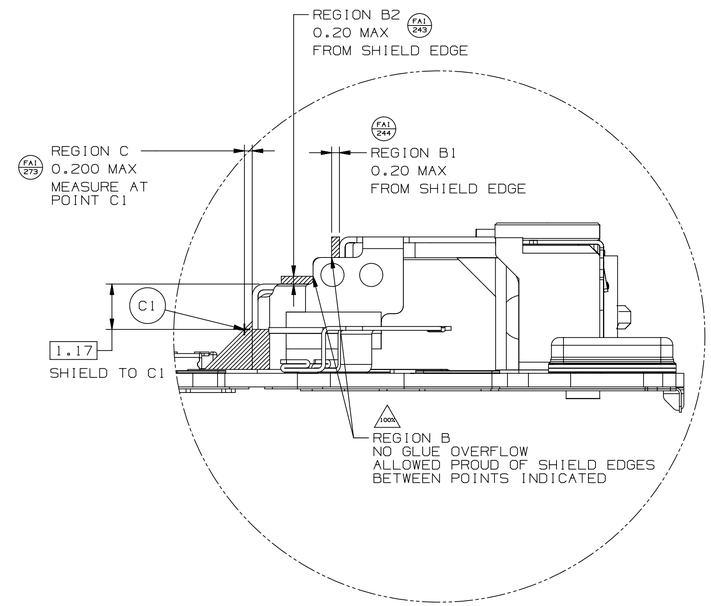

DETAIL AB

FAI 295 REGION A AND E: UP TO 4 DOTS OF SPUTTER FROM NOZZLE ALLOWABLE.
DIAMETER MUST NOT EXCEED 0.6 mm

NOTICE OF PROPRIETARY PROPERTY:

THE INFORMATION CONTAINED HEREIN IS THE PROPRIETARY PROPERTY OF APPLE INC. THE POSSESSOR AGREES TO THE FOLLOWING:
(i) TO MAINTAIN THIS DOCUMENT IN CONFIDENCE
(ii) NOT TO REPRODUCE OR COPY IT
(iii) NOT TO REVEAL OR PUBLISH IT IN WHOLE OR PART
(iv) ALL RIGHTS RESERVED

Apple Inc.

SIZE	DRAWING NUMBER	REV.
D	056-20043	A
SCALE: NONE	SHT 12 OF 15	

NX GENERATED

21 38 E85 FLEX GLUE OVERFLOW

39 REGION D AND SCREW AREA THICKNESS INSPECTION

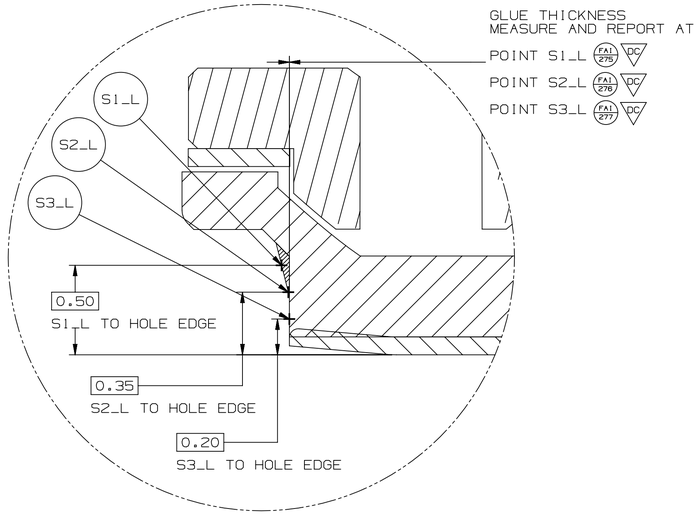

DETAIL AP

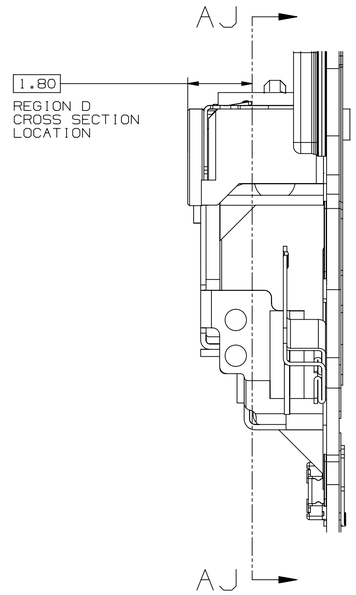

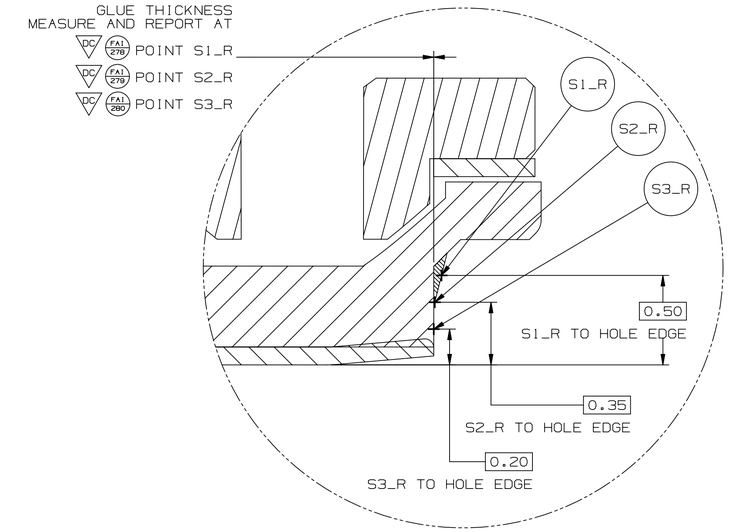

DETAIL AR

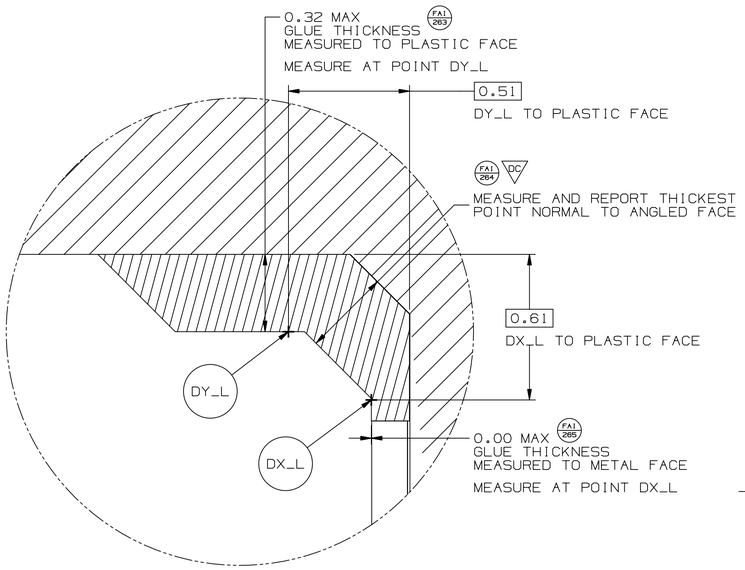

DETAIL AK

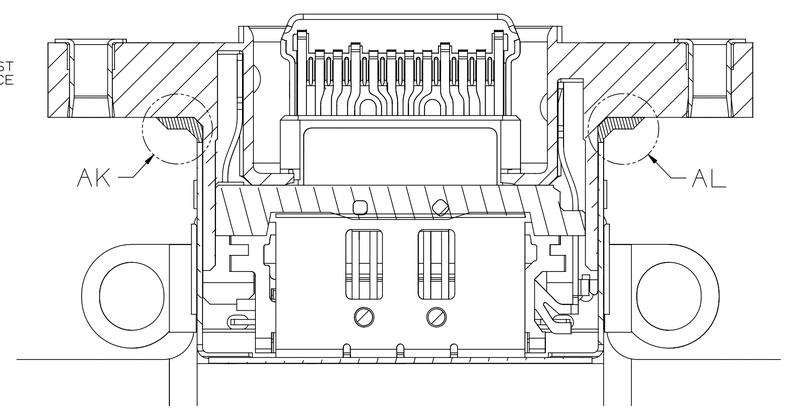

SECTION AJ-AJ

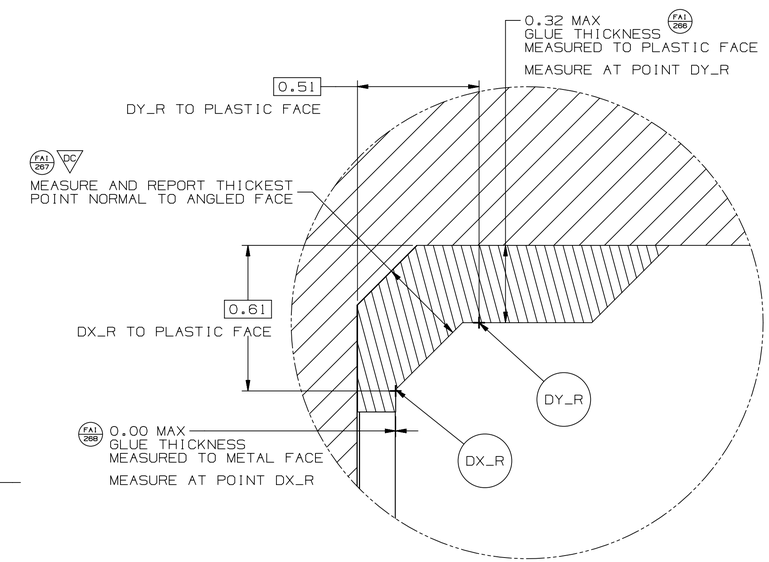

DETAIL AL

NOTICE OF PROPRIETARY PROPERTY:

THE INFORMATION CONTAINED HEREIN IS THE PROPRIETARY PROPERTY OF APPLE INC. THE POSSESSOR AGREES TO THE FOLLOWING:
(i) TO MAINTAIN THIS DOCUMENT IN CONFIDENCE
(ii) NOT TO REPRODUCE OR COPY IT
(iii) NOT TO REVEAL OR PUBLISH IT IN WHOLE OR PART
(iv) ALL RIGHTS RESERVED

Apple Inc.

SIZE	DRAWING NUMBER	REV.
D	056-20043	A
SCALE: NONE	SHT 13 OF 15	

NX GENERATED

FLEX VENDOR FLEX BENDS

BEND LINES

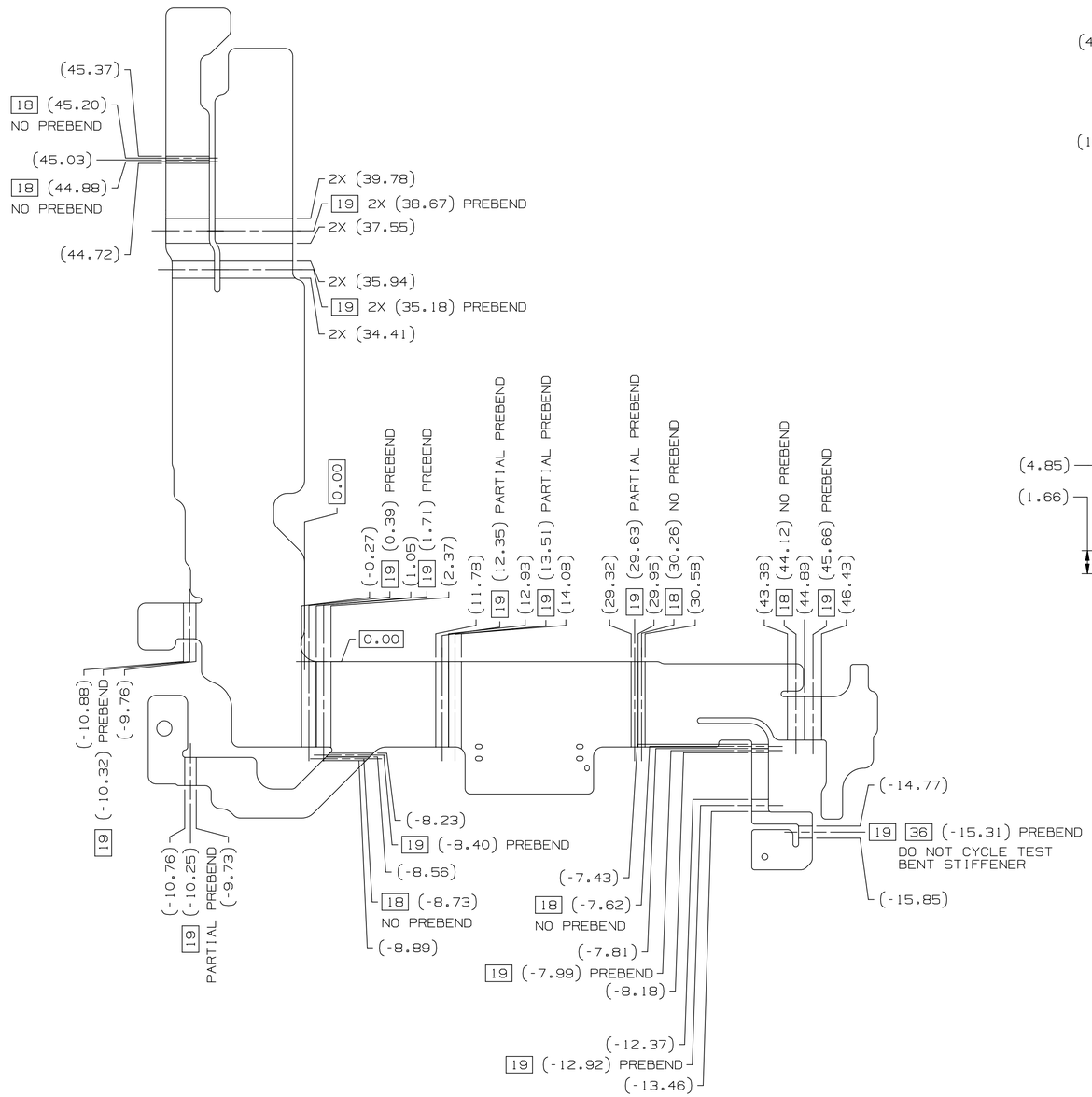

BEND DETAILS

VIEWED FROM BOTTOM

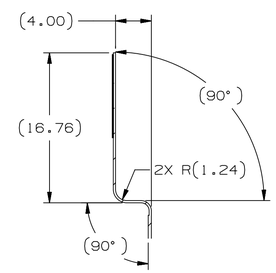

SECTION D - D

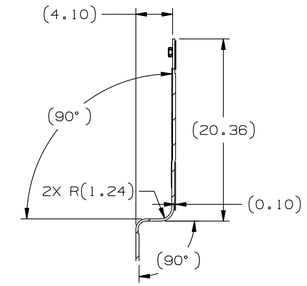

SECTION E - E

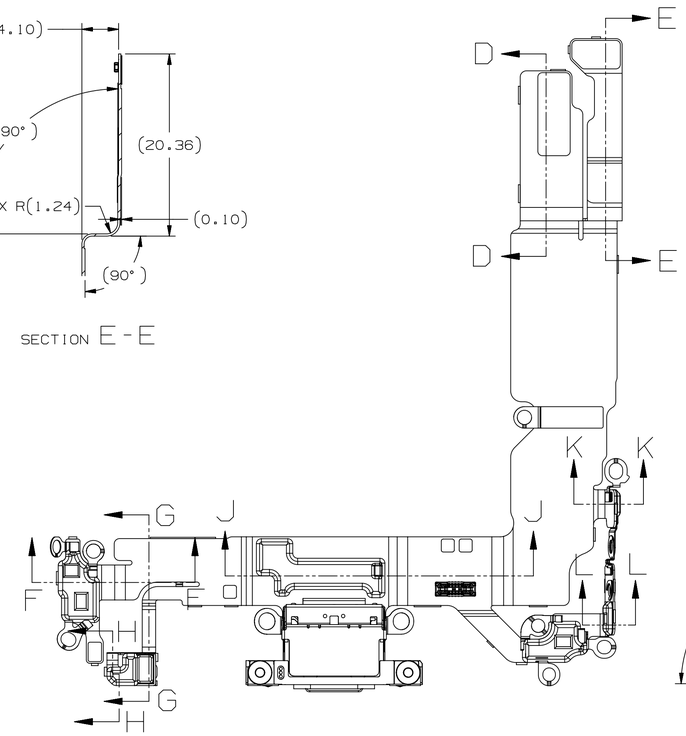

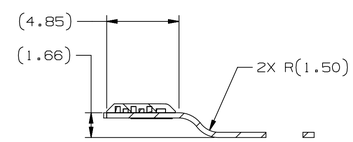

SECTION F - F

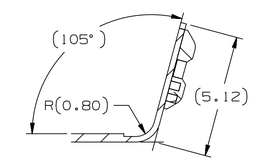

SECTION K - K

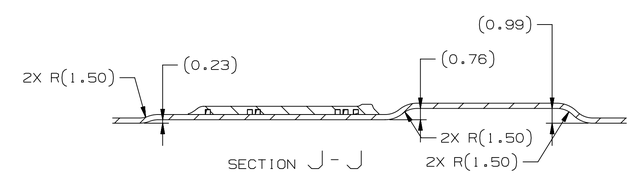

SECTION J - J

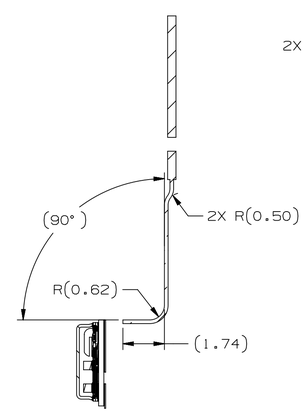

SECTION G - G

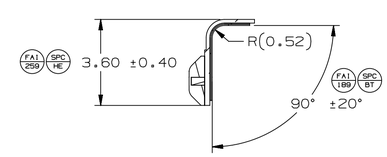

SECTION H - H

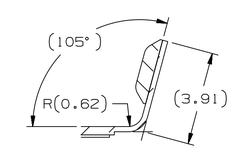

SECTION L - L

NOTICE OF PROPRIETARY PROPERTY:
THE INFORMATION CONTAINED HEREIN IS THE PROPRIETARY PROPERTY OF APPLE INC. THE POSSESSOR AGREES TO THE FOLLOWING:
(i) TO MAINTAIN THIS DOCUMENT IN CONFIDENCE
(ii) NOT TO REPRODUCE OR COPY IT
(iii) NOT TO REVEAL OR PUBLISH IT IN WHOLE OR PART
(iv) ALL RIGHTS RESERVED

Apple Inc.

SIZE	DRAWING NUMBER	REV.
D	056-20043	A
SCALE: NONE	SHT 14 OF 15	

29 FATP FLEX BENDS

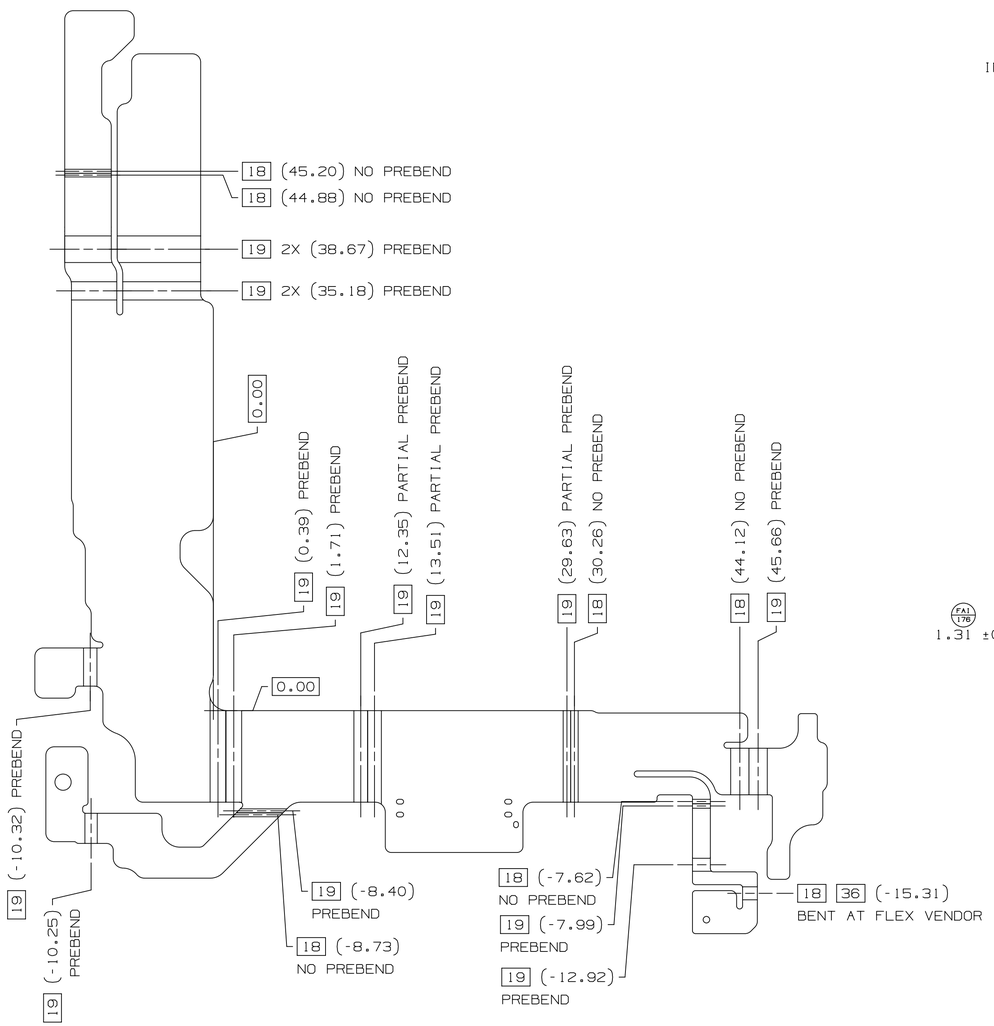

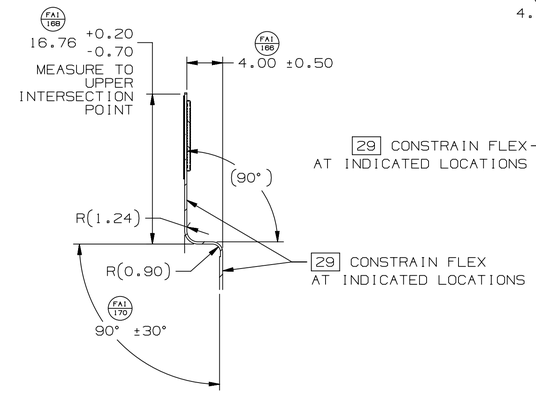

SECTION M - M

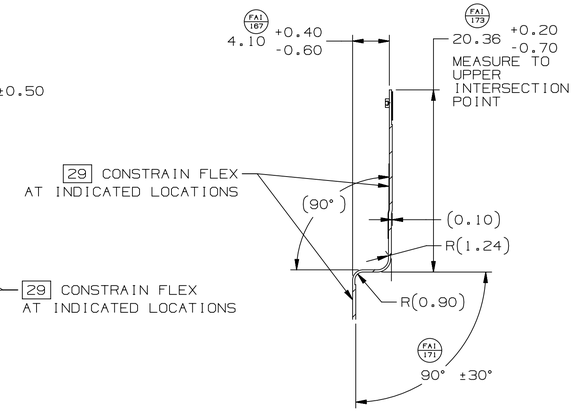

SECTION N - N

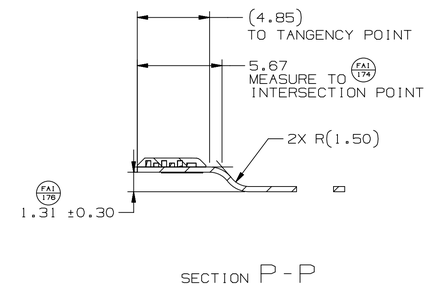

SECTION P - P

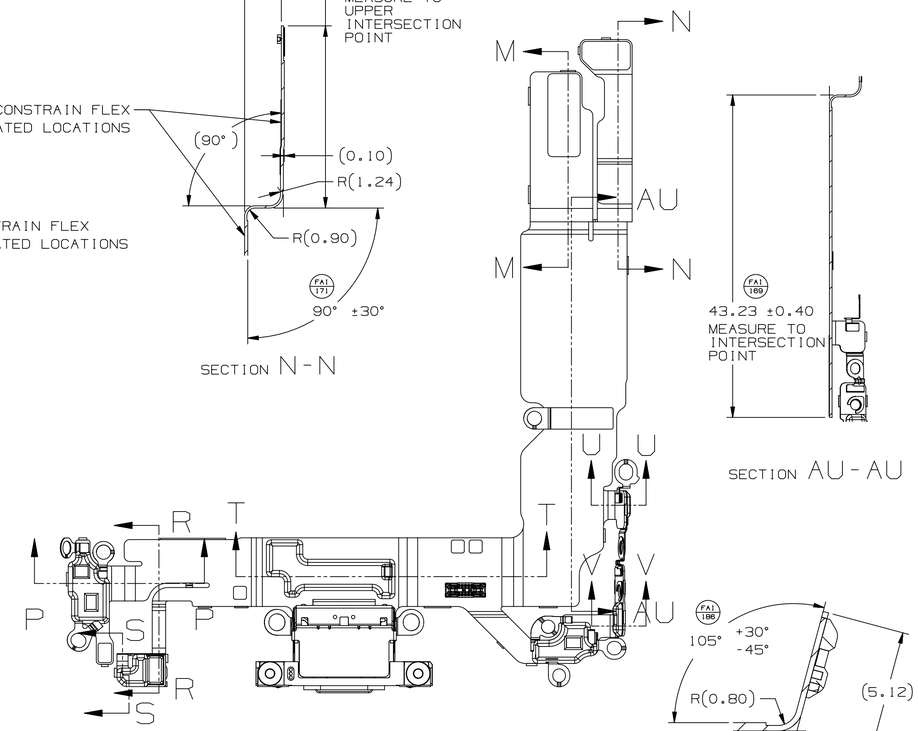

SECTION AU - AU

SECTION U - U

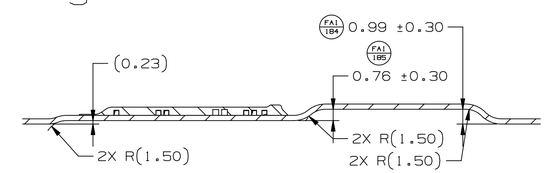

SECTION T - T

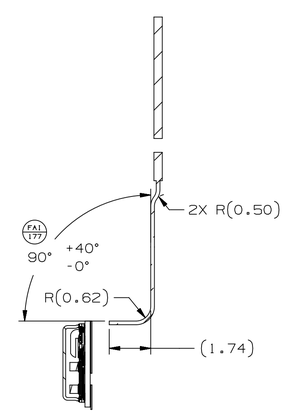

SECTION R - R

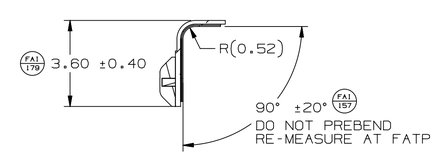

SECTION S - S

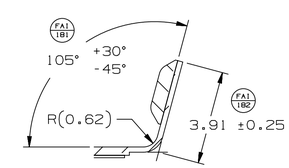

SECTION V - V

NOTICE OF PROPRIETARY PROPERTY:
THE INFORMATION CONTAINED HEREIN IS THE PROPRIETARY PROPERTY OF APPLE INC. THE POSSESSOR AGREES TO THE FOLLOWING:
(i) TO MAINTAIN THIS DOCUMENT IN CONFIDENCE
(ii) NOT TO REPRODUCE OR COPY IT
(iii) NOT TO REVEAL OR PUBLISH IT IN WHOLE OR PART
(iv) ALL RIGHTS RESERVED

Apple Inc.

SIZE	DRAWING NUMBER	REV.
D	056-20043	A
SCALE: NONE	SHT 15 OF 15	

NX GENERATED