QTY	DESCRIPTION	LENGTH	COMMENT
2	2x6 PLATE	10'–8"	WALL PLATE
1	2x6 PLATE	5'–0"	SHIP LOOSE
1	2x6 PLATE	10'–0"	SHIP LOOSE
9	2x6 STUD	7'–7½"	STUD
4	2x6 STUD	2'–0¼"	STUD
2	2x6 STUD	6'–7¾"	JAMB STUD
6	2x6 STUD	4½"	CRIPPLE STUD
1	2x6 SILL	3'–1"	WINDOW SILL
2	2x8 HEADER	3'–4"	HEADER

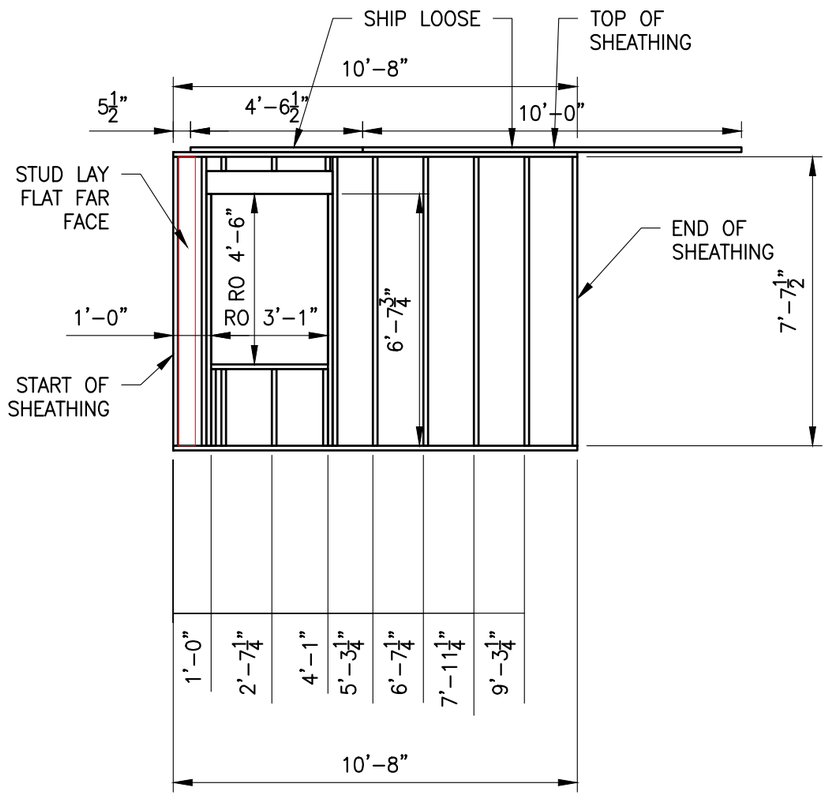

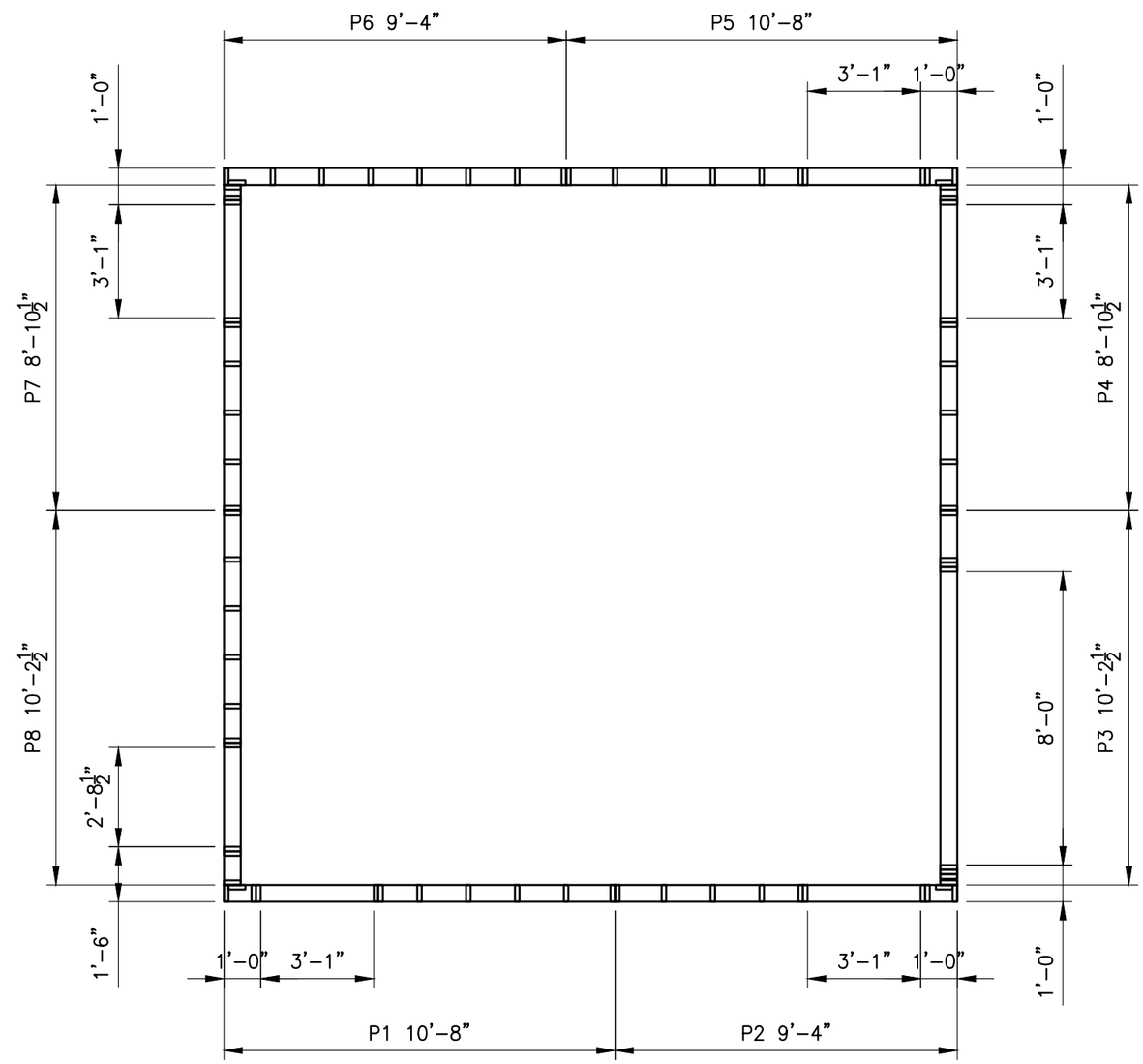

P1
1/4"=1'–0"

20' X 20' CAMP
WALL PANELS

STEELE TRUSS COMPANY INC.
118 TRADE ROAD
PLATTSBURGH, NY 12901

DRAWN: CAN	DATE: 11/19/24
CHECKED:	SCALE: AS SHOWN

REVISIONS:

EXTERIOR WALL PANEL

P1

QTY	DESCRIPTION	LENGTH	COMMENT
2	2x6 PLATE	9'–4"	WALL PLATE
1	2x6 PLATE	5'–0"	SHIP LOOSE
9	2x6 STUD	7'–7½"	STUD
4	2x6 STUD	2'–0¼"	STUD
2	2x6 STUD	6'–7¾"	JAMB STUD
6	2x6 STUD	4½"	CRIPPLE STUD
1	2x6 SILL	3'–1"	WINDOW SILL
2	2x8 HEADER	3'–4"	HEADER

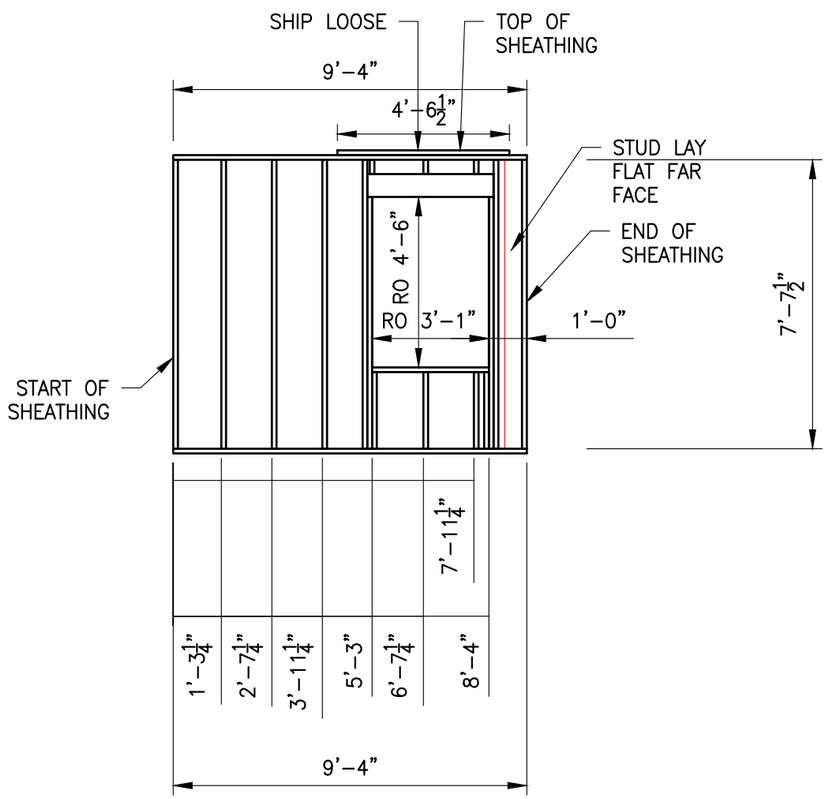

P2
1/4"=1'–0"

20' X 20' CAMP
WALL PANELS

STEELE TRUSS COMPANY INC.
118 TRADE ROAD
PLATTSBURGH, NY 12901

DRAWN: CAN	DATE: 11/19/24
CHECKED:	SCALE: AS SHOWN

REVISIONS:

EXTERIOR WALL PANEL

P2

QTY	DESCRIPTION	LENGTH	COMMENT
2	2x6 PLATE	10'–2½"	WALL PLATE
1	2x6 PLATE	5'–0"	SHIP LOOSE
1	2x6 PLATE	10'–0"	SHIP LOOSE
6	2x6 STUD	7'–7½"	STUD
2	2x6 STUD	6'–6½"	JAMB STUD
6	2x6 STUD	3¾"	CRIPPLE STUD
2	2x10 HEADER	8'–3"	HEADER

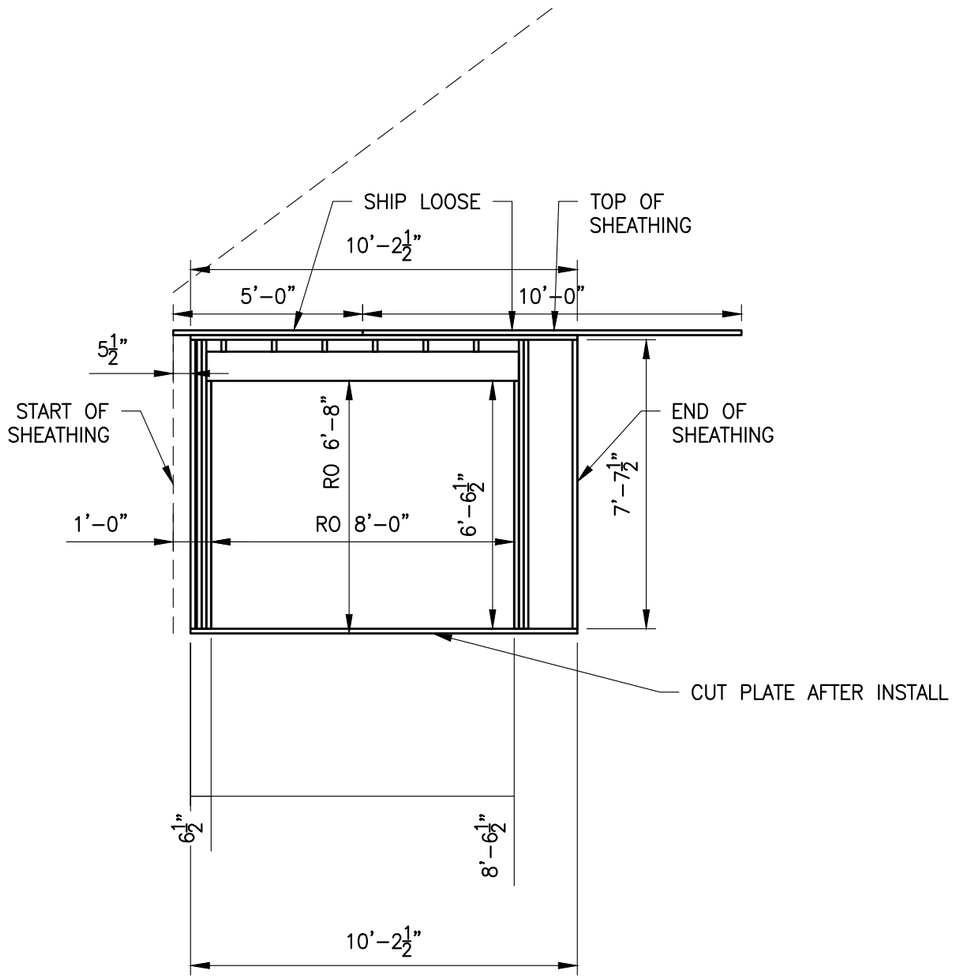

P3
1/4"=1'–0"

20' X 20' CAMP
WALL PANELS

STEELE TRUSS COMPANY INC.
118 TRADE ROAD
PLATTSBURGH, NY 12901

DRAWN: CAN	DATE: 11/19/24
CHECKED:	SCALE: AS SHOWN

REVISIONS:

EXTERIOR WALL PANEL

P3

QTY	DESCRIPTION	LENGTH	COMMENT
2	2x6 PLATE	8'-10½"	WALL PLATE
1	2x6 PLATE	5'-0"	SHIP LOOSE
7	2x6 STUD	7'-7½"	STUD
4	2x6 STUD	2'-0¼"	STUD
2	2x6 STUD	6'-7¾"	JAMB STUD
3	2x6 STUD	4½"	CRIPPLE STUD
1	2x6 SILL	3'-1"	WINDOW SILL
2	2x8 HEADER	3'-4"	HEADER

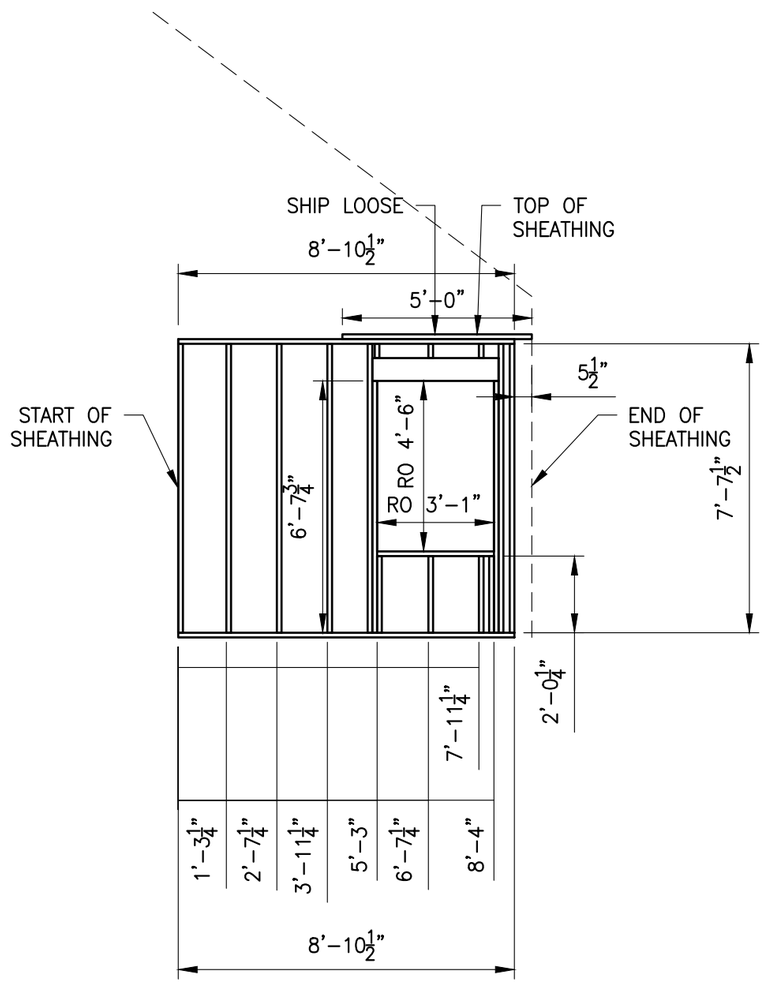

P4

1/4"=1'-0"

20' X 20' CAMP
WALL PANELS

STEELE TRUSS COMPANY INC.
118 TRADE ROAD
PLATTSBURGH, NY 12901

DRAWN: CAN	DATE: 11/19/24
CHECKED:	SCALE: AS SHOWN

REVISIONS:

EXTERIOR WALL PANEL

P4

QTY	DESCRIPTION	LENGTH	COMMENT
2	2x6 PLATE	10'–8"	WALL PLATE
1	2x6 PLATE	5'–0"	SHIP LOOSE
1	2x6 PLATE	10'–0"	SHIP LOOSE
9	2x6 STUD	7'–7½"	STUD
4	2x6 STUD	2'–0¼"	STUD
2	2x6 STUD	6'–7¾"	JAMB STUD
6	2x6 STUD	4½"	CRIPPLE STUD
1	2x6 SILL	3'–1"	WINDOW SILL
2	2x8 HEADER	3'–4"	HEADER

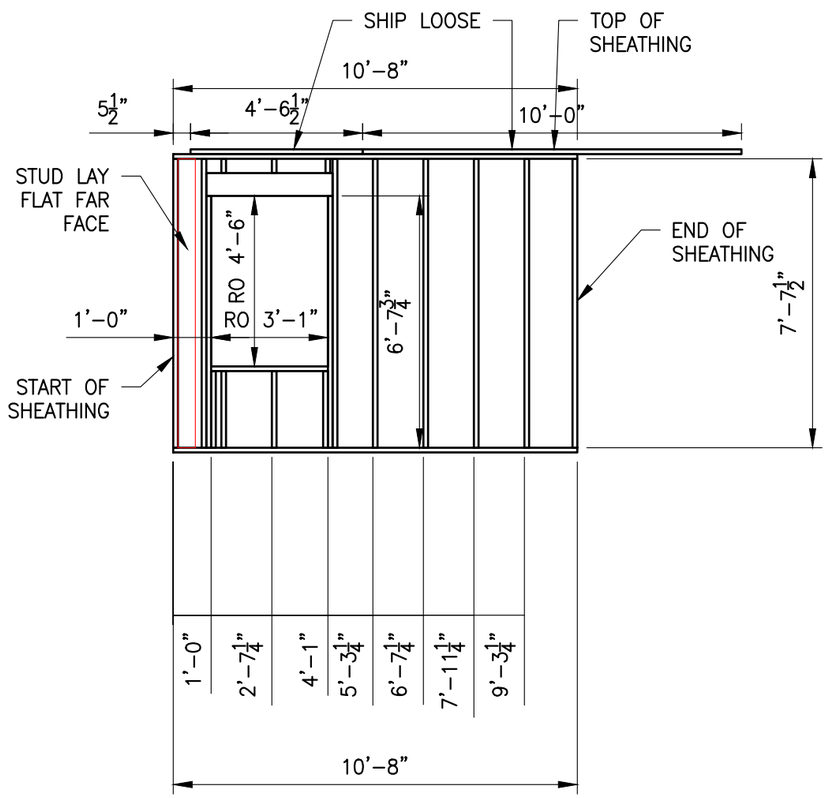

P5

1/4"=1'–0"

20' X 20' CAMP
WALL PANELS

STEELE TRUSS COMPANY INC.
118 TRADE ROAD
PLATTSBURGH, NY 12901

DRAWN: CAN	DATE: 11/19/24
CHECKED:	SCALE: AS SHOWN

REVISIONS:

EXTERIOR WALL PANEL

P5

QTY	DESCRIPTION	LENGTH	COMMENT
2	2x6 PLATE	9'–4"	WALL PLATE
1	2x6 PLATE	5'–0"	SHIP LOOSE
9	2x6 STUD	7'–7½"	STUD

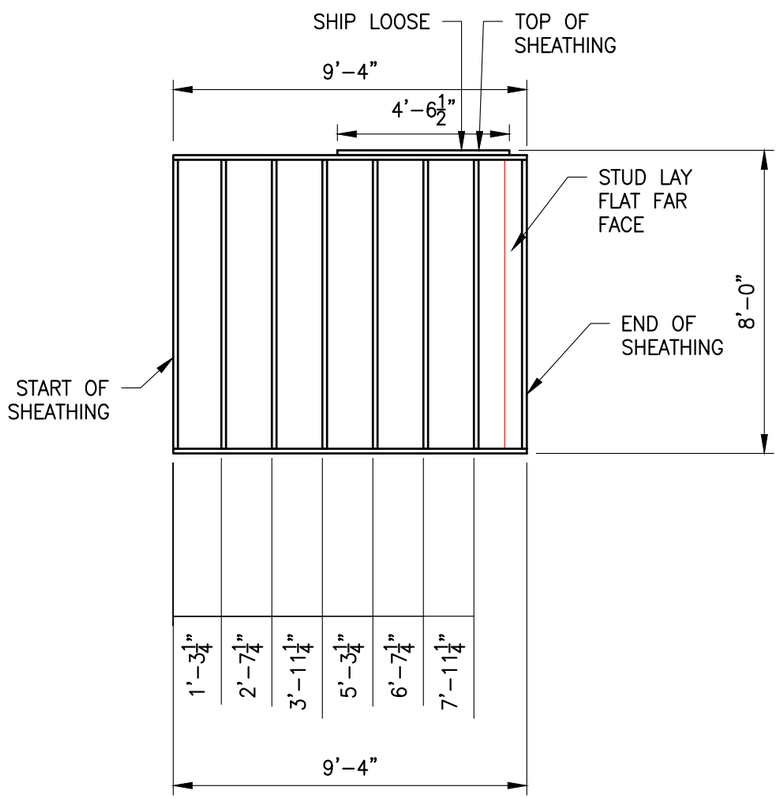

P6

1/4"=1'–0"

20' X 20' CAMP
WALL PANELS

STEELE TRUSS COMPANY INC.
118 TRADE ROAD
PLATTSBURGH, NY 12901

DRAWN: CAN	DATE: 11/19/24
CHECKED:	SCALE: AS SHOWN

REVISIONS:

EXTERIOR WALL PANEL

P6

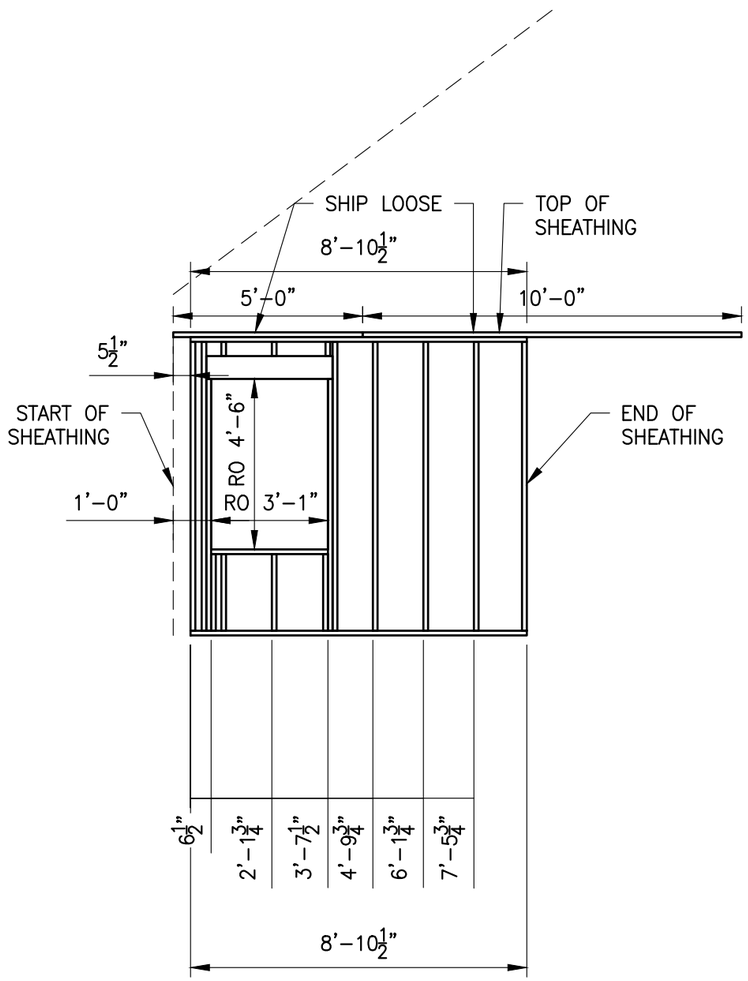

QTY	DESCRIPTION	LENGTH	COMMENT
2	2x6 PLATE	8'-10½"	WALL PLATE
1	2x6 PLATE	5'-0"	SHIP LOOSE
1	2x6 PLATE	10'-0"	SHIP LOOSE
7	2x6 STUD	7'-7½"	STUD
4	2x6 STUD	2'-0¼"	STUD
2	2x6 STUD	6'-7¾"	JAMB STUD
3	2x6 STUD	4½"	CRIPPLE STUD
1	2x6 SILL	3'-1"	WINDOW SILL
2	2x8 HEADER	3'-4"	HEADER

P7

1/4"=1'-0"

20' X 20' CAMP
WALL PANELS

STEELE TRUSS COMPANY INC.
118 TRADE ROAD
PLATTSBURGH, NY 12901

DRAWN: CAN	DATE: 11/19/24
CHECKED:	SCALE: AS SHOWN

REVISIONS:

EXTERIOR WALL PANEL

P7

QTY	DESCRIPTION	LENGTH	COMMENT
2	2x6 PLATE	10'-2½"	WALL PLATE
1	2x6 PLATE	5'-0"	SHIP LOOSE
8	2x6 STUD	7'-7½"	STUD
2	2x6 STUD	6'-7¾"	JAMB STUD
6	2x6 STUD	4½"	CRIPPLE STUD
2	2x8 HEADER	2'-11½""	HEADER

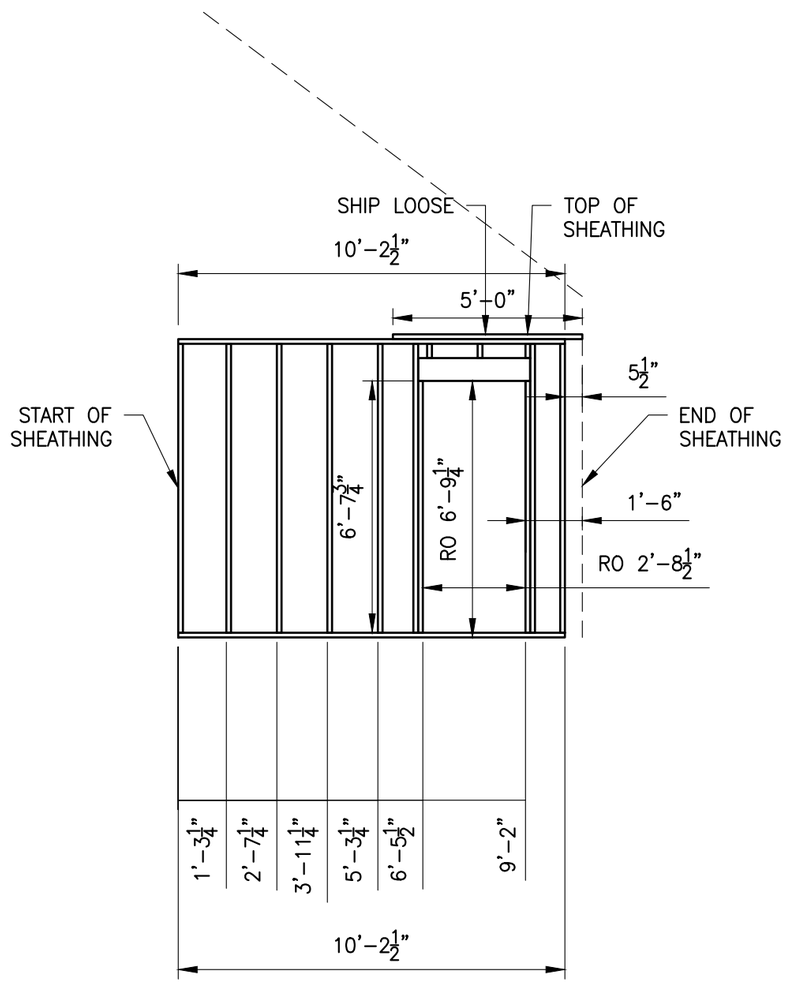

P8

1/4"=1'-0"

20' X 20' CAMP
WALL PANELS

STEELE TRUSS COMPANY INC.
118 TRADE ROAD
PLATTSBURGH, NY 12901

DRAWN: CAN	DATE: 11/19/24
CHECKED:	SCALE: AS SHOWN

REVISIONS:

EXTERIOR WALL PANEL

P8

QTY	DESCRIPTION	LENGTH	COMMENT
4	2x6 PLATE	7'–1"	WALL PLATE
4	2x6 PLATE	6'–0"	WALL PLATE
2	2x6 PLATE	8'–0"	SHIP LOOSE
2	2x6 PLATE	5'–1"	SHIP LOOSE
28	2x6 STUD	7'–7½"	STUD
2	2x6 STUD	6'–7¾"	JAMB STUD
2	2x6 STUD	7'–0¼"	JAMB STUD
2	2x6 STUD	4½"	CRIPPLE STUD
2	2x8 HEADER	2'–11½"	HEADER
2	2x8 HEADER	3'–1"	HEADER

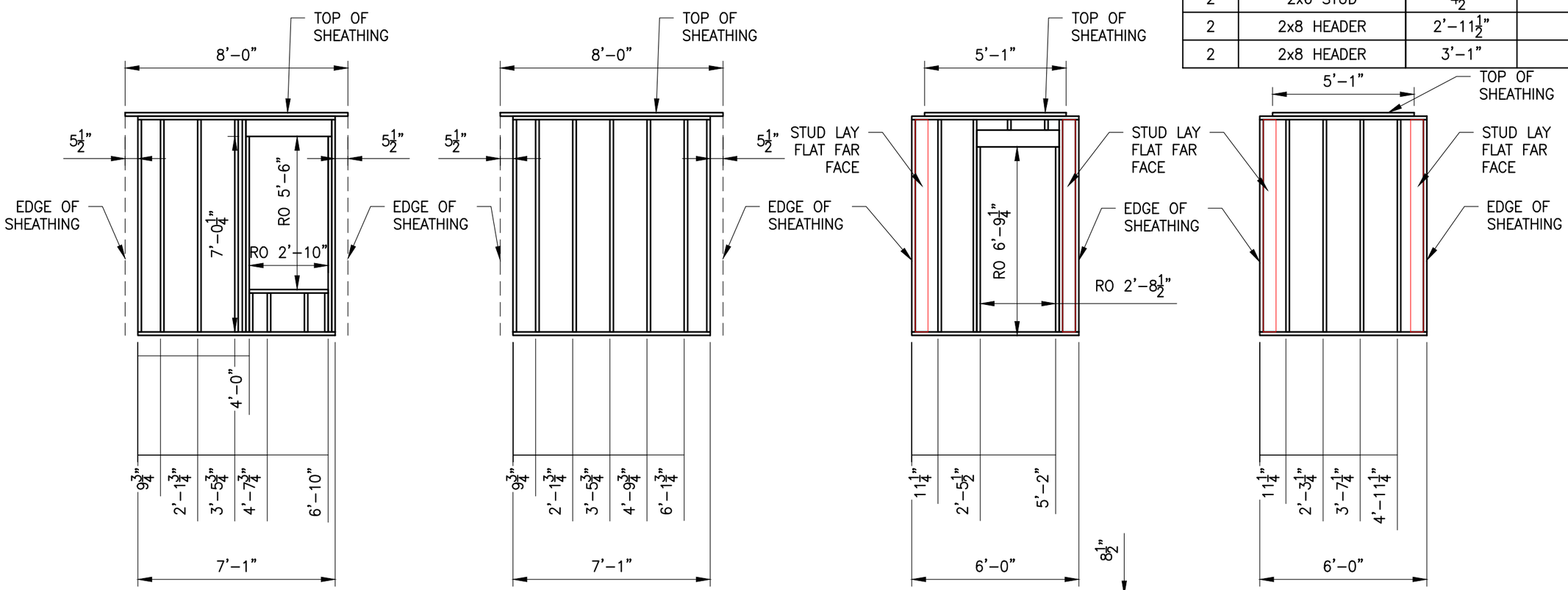

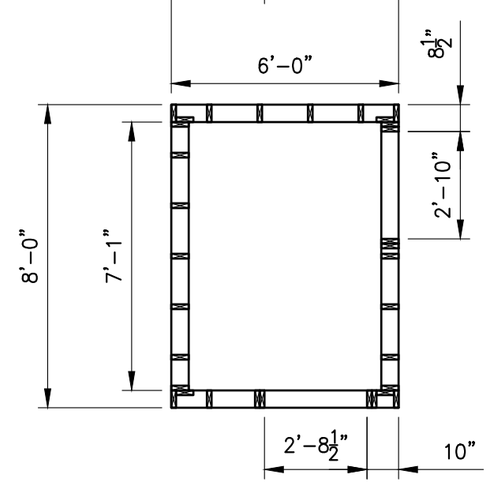

OUT HOUSE

1/4"=1'–0"

20' X 20' CAMP
WALL PANELS

STEELE TRUSS COMPANY INC.
118 TRADE ROAD
PLATTSBURGH, NY 12901

DRAWN: CAN	DATE: 11/19/24
CHECKED:	SCALE: AS SHOWN

REVISIONS:

EXTERIOR WALL PANEL

OUT HOUSE