Phaser

VCarrara

Definition

Phaser is the effect produced by combining a filtered and non-filtered signal. The filtered signal passes through a variable all-pass filter modulated by a Low Frequency Oscillator (LFO). Several stages of all-pass filter with variable phase shift each makes the mixed signal resonating like a jet motor. Phaser is closed related with Flanger and Chorus. The signal in Flanger is delayed by variable time modulated by a LFO and then combined with the source. On the other hand, in the Chorus effect the signal is combined with several delayed copies with slightly pitch and frequency variations driven by a LFO.

Phaser

The Phaser is normally formed by several identical modules placed in series. One of them is shown in the Figure 1. Each two of these modules shifts the wave phase by 180º at the resonant frequency of the high-pass filter formed by the capacitor C and the resistor R. Some modules have only the resistor, while others have an LED-LDR (Light Dependent Resistor) set in parallel to the resistor. The LED-LDR set is driven by an LFO (Low Frequency Oscillator) which therefore varies the resonant frequency of each module. In Figure 1 the LED-LDR was replaced by an R_c potentiometer.

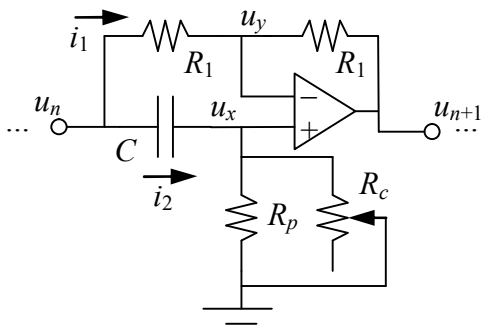

Fig. 1 – A single stage of the Phaser resonant filter.

Phaser model

Considering u_n as the voltage input to the module n (n = 1, …, N) and u_{n+1} its output, then the elementary equations in Z transform for this circuit are

$$U_n = \frac{T(1+z^{-1})}{2C(1-z^{-1})} I_2 + U_x ,$$

$$U_x = R\, I_2 ,$$

$$U_n = R_1\, I_1 + U_y ,$$

$$U_y = R_1\, I_1 + U_{n+1} ,$$

$$U_{n+1} = K(U - U_y) ,$$

neglecting the currents on the operation amplifier inputs, and considering that R is the equivalent resistor from the high-pass filter, which depends of R_p and R_c. The transfer function of this circuit can be obtained by solving this set of equations, resulting in

$$U_{n+1} = \frac{K(2CR+T)z^{-1} - K2CR + T}{(K2CR - KT + 4CR - 2T)z^{-1} - K2CR - KT - 4CR - 2T} U_n ,$$

but given that the operational amplifier gain is such that $K >> 1$, the above equation results

$$U_{n+1} \approx \frac{(2CR+T)z^{-1} - 2CR + T}{(2CR-T)z^{-1} - 2CR - T} U_n .$$

By expressing this relation in time domain, it comes to

$$u_{n+1}(k) = b u_n(k) - u_n(k-1) + b u_{n+1}(k-1) ,$$

such that

$$b = \frac{2CR - T}{2CR + T} .$$

Now all modules can be joined in cascade, with audio input given by $u_0(k) = u_e(k)$ and output $u_N(k)$:

$$\begin{aligned} &u_1(k) = b[u_0(k) + u_1(k-1)] - u_0(k-1) , \\ &u_2(k) = b[u_1(k) + u_2(k-1)] - u_1(k-1) , \\ &\ldots \\ &u_N(k) = b[u_{N-1}(k) + u_N(k-1)] - u_{N-1}(k-1) , \end{aligned}$$

Finally, the output from the Phaser can be equally mixed with the audio input, giving

$$u_s(k) = g\,[u_N(k) + u_e(k)]$$

where g is the output gain ($0 < g \leq 1$). Based on the Phaser 100 pedal, it was chosen 10 cascade levels for this model ($N = 10$).

Phaser controls

The resistor R_p and capacitor C in the Phaser 100 effect pedal are 20 kΩ and 10 nF, respectively. The LED-LDR driven by a LFO changes the equivalent resistance R from a very low value (few hundreds of Ohms) up to something around 20 kΩ. Since the LED-LDR is driven by an oscillator, R changes in a sinusoidal wave. Moreover, since b depends only on the product $C\ R$, just one parameter needs to be adjusted in the phaser model. However, and considering that the proposed Phaser model is rather simple, some tests were

performed to check the resulting audio, and a reasonable result for R was obtained with two resistors in series, as shown in Figure 2. In other words, R can be modeled by

$$R = R_c \; f_{lfo}(t) + R_p$$

where $f_{lfo}(t)$ is the Low Frequency Oscillator function, such that $0 \leq f_{lfo}(t) \leq 1$.

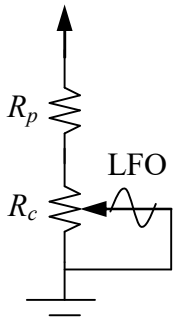

Fig. 2 – The equivalent circuit of the LED-LDR resistor.

These two resistors have similar yet different behavior. R_c can be associated with the oscillator amplitude, or effect level, while R_p increases or decreases the effect depth. By trial and error, the maximum values obtained for R_c and R_p were 100 kΩ and 500 kΩ, respectively. R_p action is reciprocal, which means that the effect depth is more noticeable when its value is close to zero. Moreover, its effect is nonlinear, so R_p shall be computed empirically by

$$R_p = 0.5\left(1 - \frac{1 - \mathrm{e}^{-10\,d}}{1 - \mathrm{e}^{-10}}\right)10^6$$

where d is the Phaser depth ($0 \leq d \leq 1$). In similar way R_c can be expressed by

$$R_c = 10^5 \; a$$

in which a is the amplitude level ($0 \leq a \leq 1$).