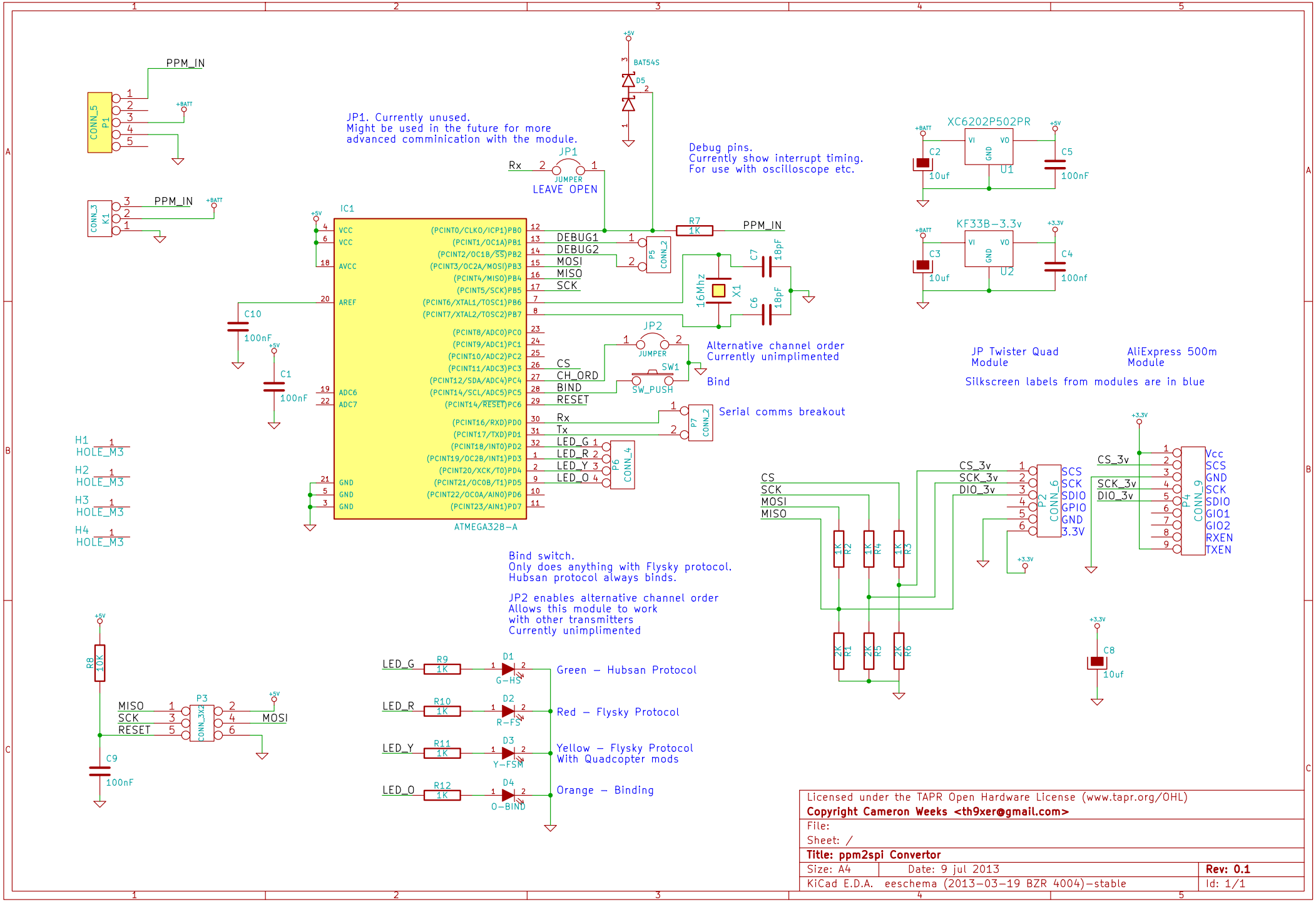

Licensed under the TAPR Open Hardware License (www.tapr.org/OHL)
Copyright Cameron Weeks <th9xer@gmail.com>

File:
Sheet: /

Title: ppm2spi Convertor

Size: A4	Date: 9 jul 2013	**Rev: 0.1**
KiCad E.D.A. eeschema (2013-03-19 BZR 4004)-stable		Id: 1/1