# Refine or Repair: Online Prediction with Refinable Information Structures

Anonymous

**Abstract**

We prove a repair obstruction for online prediction. For any fixed information partition $\Pi$, every adaptive learner whose predictions remain $\Pi$-measurable has expected regret at least

$$T\left(R_L(\Pi) - R_L(\Pi^\star)\right)$$

against a refined oracle partition $\Pi^\star$, up to the standard epsilon-oracle relaxation when Bayes actions are not attained. Thus a positive refinement gap is an information-structure error: no update that preserves $\Pi$ can remove it.

We characterize useful refinements. Adding a prediction-time binary distinction has zero value exactly when the refined Bayes action is already measurable under the old information; under log loss its value is $I(Y; U \mid \mathcal{F})$, and under squared loss it is conditional variance reduction.

We instantiate the escape operation as Distinction Graph Machines, a dynamic graph-memory data structure whose edges are accepted distinctions and whose nodes store repairable local memories. On a frequency-controlled CIFAR-100 hierarchy query stream, DGM recovers the fine-to-coarse graph with one accepted edge per fine class, while repair-only learners remain at the structural log-loss bound, frequency-only recovery fails, and crossed interaction baselines solve the task with many more parameters. On a non-oracle CIFAR-100 Image-HQS stream, an image-routed DGM posterior memory improves 10-seed test log loss over online logistic and crossed-interaction baselines.

# Contents


**1 Introduction** **1**

**2 Mathematical Model: Partitions, Predictors, and Bayes Risk** **2**
2.1 Partitions, predictors, and risk . . . 2

**3 Online Prediction with Repair and Refinement** **3**

**4 The Repair-Only Obstruction** **4**
4.1 Repair-only lower bound . . . 5
4.2 Sigma-algebra extension . . . 7

**5 Minimal Refinement** **7**
5.1 The finite refinement rule . . . 8
5.2 The sigma-algebra form . . . 8

**6 The Value of a Distinction** **9**
6.1 Risk monotonicity . . . 9
6.2 Loss-relevant refinement . . . 10
6.3 Log loss . . . 10
6.4 Squared loss . . . 11
6.5 Minimal loss-sufficient refinement . . . 11

**7 Empirical Split Scores and Finite-Sample Refinement** **11**
7.1 Finite empirical scores . . . 12
7.2 Distinction complexity . . . 12
7.3 Greedy recovery under realizability . . . 13
7.4 A finite-class oracle inequality . . . 14

**8 Distinction Graph Machines: A Data Structure for Refinable Partitions** **14**
8.1 Why a graph, not a tree? . . . 15
8.2 Hard-DGM state and invariants . . . 15
8.3 Soft-DGM edge-gated prediction . . . 17
8.4 Refine or repair on a graph . . . 19
8.5 Data-structure operations . . . 24
8.6 Canonical local memory . . . 25
8.7 From DGM to DGM-Embedding . . . 26

**9 Guarantees** **26**

**10 Evaluation Design: Inference-Time Adaptation** **28**
10.1 Runtime contract . . . 28
10.2 Questions . . . 29
10.3 Benchmarks . . . 29
10.4 Non-oracle CIFAR-100 Image-HQS . . . 29
10.5 Baselines and ablations . . . 30
10.6 Metrics and reporting . . . 31
10.7 Decision rule for claiming evidence . . . 31

**11 Related Work** **31**

**12 Conclusion** **32**

**A Appendix Roadmap** **42**

**B Limitations** **42**

**C Related Work** **43**
C.1 Methods that repair without refining . . . 43
C.2 Methods that refine without local repair . . . 44
C.3 Methods that route without runtime concept creation . . . 44
C.4 DGM's position . . . 44

**D M4 Max Evaluation Grid and Diagnostics** **45**
D.1 Run tiers . . . 45
D.2 Hardware and accounting . . . 45
D.3 Controlled-stream grid . . . 45
D.4 Vision-stream grid . . . 46
D.5 Non-oracle Image-HQS audit and ablations . . . 46
D.6 Language-stream grid . . . 47
D.7 Required failure diagnostics . . . 47

**E DGM-Embedding: Architectural Extension for Language Models** **47**
E.1 Hidden-state concepts . . . 48
E.2 Calibrated memory distribution . . . 48
E.3 Read before observe . . . 49
E.4 Sequential detached training . . . 50

**F DGM Implementation Extensions** **50**
F.1 Trees as a hard-routing special case . . . 50
F.2 DGM data-structure cost . . . 51
F.3 Ridge local memory . . . 51
F.4 Training modes for representation drift . . . 52
F.5 Non-canonical adapter extension . . . 52
F.6 Cost and systems notes . . . 53
F.7 Closed-form local repair . . . 53

**G Proof Sketches** **54**

**H From Distinctions to Projection Memory** **59**
H.1 One-hot partition memory . . . 59
H.2 CPM conflict as missing distinction . . . 59
H.3 The hierarchy . . . 60

**I Minimal Refinement Proofs** **60**

**J Value of Distinction Proofs** **62**

**K DGM Algorithm and Projection-Bridge Proofs** **65**

# 1 Introduction

Runtime learning is often formulated as an update problem: after a surprising observation, which part of the learner's state should change? Existing mechanisms include cache and retrieval memories [GCJ17, KLJ+20, LPP+20], parameter-efficient adaptation states [HGJ+19, HSW+22], and test-time optimization [SWL+20, WSL+21]. This paper studies a prior question. Before choosing an update rule, a learner must determine whether the error is expressible under its current information structure. If two cases are indistinguishable to the runtime state but require different predictions, no repair of values inside that state can separate them.

We model this distinction using information partitions, following the decision-theoretic view that available information constrains admissible decision rules [Bla53, Ber85]. A runtime state induces an equivalence relation over cases. A repair update changes the action assigned to an existing equivalence class. A refinement update changes the equivalence relation itself by adding an observable distinction. In the simplest log-loss example, the trivial partition on two noiseless labels pays $\log 2$ per round, while the partition that separates the two states pays zero. The gap is not an optimization failure; it is an information-structure error.

The first result is a repair obstruction for online prediction. For any fixed partition $\Pi$, every adaptive learner whose predictions remain $\Pi$-measurable has expected loss at least the Bayes risk $R_L(\Pi)$ on each round. Relative to an oracle that predicts using a refined partition $\Pi^\star$, the cumulative regret is therefore at least

$$T\left(R_L(\Pi) - R_L(\Pi^\star)\right),$$

up to the standard epsilon-oracle relaxation when Bayes actions are not attained. Thus a positive refinement gap is a structural lower bound: updates that preserve $\Pi$ cannot remove it. Gradient steps, cache writes, local sufficient-statistic updates, and adapter updates fall under this statement only when they preserve the relevant information map; updates that change the representation are refinements in this model, not repairs.

The second question is which refinements are worth accepting. The minimal way to add a binary distinction $U$ is the join

$$\Pi \vee U = \{B \cap U^{-1}(0), B \cap U^{-1}(1) : B \in \Pi\} \setminus \{\varnothing\},$$

or, in sigma-algebra form, $\mathcal{F} \vee \sigma(U)$ [Bil95, Kal02]. This operation splits exactly the atoms crossed by the new distinction and leaves the rest unchanged. We then characterize useful refinements in Bayes-risk terms. If $\mathcal{F} \subseteq \mathcal{G}$ and the $\mathcal{G}$-Bayes action is unique, the refinement gap is zero exactly when that refined Bayes action already has an $\mathcal{F}$-measurable version. Under log loss, the value of a binary distinction is $I(Y; U \mid \mathcal{F})$; under squared loss, it is conditional variance reduction [CT06, GR07]. Refinement is therefore consequence-sensitive rather than purely geometric.

We instantiate this escape operation as Distinction Graph Machines (DGM). DGM is a runtime graph-memory layer attached to an encoder such as a transformer, CNN, or MLP [VSP+17, LBBH98, RHW86]. The encoder supplies hidden states $h = \phi_\theta(x)$; DGM maintains graph nodes with repairable local memories and graph edges corresponding to accepted binary distinctions. The formal Hard-DGM state gives an exact graph-generated information structure, while Soft-DGM provides a sparse differentiable approximation under candidate-recall and margin assumptions. This scope is deliberately limited: DGM is not claimed to dominate unrestricted end-to-end neural adaptation. It is an algorithmic realization of a refine-or-repair decision when the runtime learner has an explicit information structure.

**Contributions.** We make five contributions.

- **Model and obstruction.** We introduce online prediction with refinable information partitions and prove a linear repair-only regret lower bound against refined oracles.
- **Refinement principle.** We identify minimal partition and sigma-algebra joins as the canonical operation for adding a distinction.
- **Value characterization.** We show that useful refinements are exactly those that change the Bayes action, with conditional mutual information and conditional variance reduction as the log-loss and squared-loss special cases.
- **Algorithms and guarantees.** We give guarded empirical split rules, distinction-complexity parameters, realizable greedy recovery guarantees, and a finite-class oracle inequality.
- **Data structure and checks.** We implement the theory as DGM, a graph-memory data structure with repairable node memories and distinction edges, and give both an oracle-partition CIFAR-100 hierarchy query stream and a non-oracle image-HQS stream with diagnostics that separate repair-only learners from refine-and-repair learners.

Section 2 defines information partitions, measurable predictors, and Bayes risk. Section 3 defines repair and refinement in the online game, and Section 4 proves the repair-only lower bound. Section 5 gives the minimal join operation. Section 6 characterizes useful distinctions and finite-sample split scores. Section 8 defines DGM as the data-structure implementation. The remaining sections state scoped guarantees, controlled experiments, and related work.

# 2 Mathematical Model: Partitions, Predictors, and Bayes Risk

We first formalize the information available to a runtime learner as a partition of the case space, using the standard link between information, measurability, and admissible decision rules [Bla53, Ber85, Bil95, Kal02]. The measurable-space notation used later is the direct sigma-algebra generalization, but the computational object is a finite partition.

## 2.1 Partitions, predictors, and risk

Let $\Omega$ be a finite case space, let $P$ be a distribution on $\Omega$, let $Y : \Omega \to \mathcal{Y}$ be the consequence variable, let $\mathsf{A}$ be an action space, and let $L : \mathcal{Y} \times \mathsf{A} \to \mathbb{R}$ be a loss with finite expectations for the predictors under discussion.

**Definition 2.1** (Information partition and partition-measurable predictor)**.** *A finite information partition is a collection of nonempty disjoint atoms*

$$\Pi = \{B_1, \ldots, B_m\}$$

*whose union is $\Omega$. It induces the equivalence relation $\omega \sim_\Pi \omega'$ iff $\omega, \omega'$ lie in the same atom $B \in \Pi$.*

*A predictor is $\Pi$-measurable if it cannot distinguish states inside the same atom:*

$$\mathsf{Pred}(\Pi) = \{f : \Omega \to \mathsf{A} : \omega \sim_\Pi \omega' \Rightarrow f(\omega) = f(\omega')\}.$$

*Equivalently, a $\Pi$-measurable predictor is a map $a : \Pi \to \mathsf{A}$ evaluated on the atom containing $\omega$.*

| Symbol | Meaning |
|---|---|
| $\Omega$ | finite case space |
| $P$ | distribution over cases |
| $Y : \Omega \to \mathcal{Y}$ | consequence or label variable |
| $\mathsf{A}$ | action space |
| $L : \mathcal{Y} \times \mathsf{A} \to \mathbb{R}$ | loss |
| $\Pi$ | finite information partition of $\Omega$ |
| $\mathsf{Pred}(\Pi)$ | predictors measurable with respect to $\Pi$ |
| $R_L(f)$ | risk of predictor $f$ |
| $R_L(\Pi)$ | Bayes risk achievable under partition $\Pi$ |
| $I : \Omega \to \mathcal{Z}$ | information map inducing a partition $\Pi(I)$ |
| $U : \Omega \to \{0, 1\}$ | binary distinction |
| $\Pi \vee U$ | partition obtained by splitting $\Pi$ by $U$ |
| $\mathcal{F}, \mathcal{G}$ | sigma-algebras or information structures |
| $V_L(\mathcal{F}, \mathcal{G})$ | value of refining $\mathcal{F}$ to $\mathcal{G}$ |
| $d_L^\epsilon$ | loss-dependent distinction complexity |
| $a_j, c_j, M_j$ | DGM anchor, centroid, and local memory for concept $j$ |
| $E_t, g_e, \mathcal{P}_t^G$ | DGM edge set, edge generator, and graph-generated partition |
| $\mathcal{B}_t^{\text{score}}$ | held-out scoring buffer for empirical refinement tests |
| $\widehat{\Delta}_{\text{repair}}, \widehat{\Delta}_{\text{refine}}$ | empirical repair and refinement gains |

Table 1: Notation used throughout the paper. We say $\Pi'$ is finer than $\Pi$ if every atom of $\Pi'$ is contained in an atom of $\Pi$.

**Definition 2.2** (Bayes risk under a partition)**.** *For $f : \Omega \to \mathsf{A}$, write $R_L(f) = \mathbb{E}[L(Y, f)]$. The Bayes risk achievable under partition $\Pi$ is*

$$R_L(\Pi) = \inf_{f \in \mathsf{Pred}(\Pi)} \mathbb{E}[L(Y, f)] = \sum_{B \in \Pi} P(B) \inf_{a \in \mathsf{A}} \mathbb{E}[L(Y, a) \mid \omega \in B], \tag{1}$$

*where atoms with $P(B) = 0$ may be assigned arbitrary actions. Thus $R_L(\Pi)$ is the best possible risk after the representation has committed to the equivalence relation $\sim_\Pi$, i.e., the Bayes risk under constrained information [Ber85].*

**Definition 2.3** (Information map and induced partition)**.** *An information map is a runtime representation $I : \Omega \to \mathcal{Z}$. It induces the partition*

$$\Pi(I) = \{I^{-1}(z) : z \in \mathcal{Z},\ I^{-1}(z) \neq \varnothing\}.$$

*Any predictor that factors through $I$, written $f(\omega) = a(I(\omega))$, is measurable with respect to $\Pi(I)$.*

## 3 Online Prediction with Repair and Refinement

The online learner has two update types: repair preserves the current partition, while refinement joins it with a new binary distinction.

**Definition 3.1** (Binary distinction and partition join)**.** *A binary distinction is a function $U : \Omega \to \{0, 1\}$. Joining $\Pi$ with $U$ means splitting every atom of $\Pi$ according to the value of $U$:*

$$\Pi \vee U = \{B \cap U^{-1}(0), B \cap U^{-1}(1) : B \in \Pi\} \setminus \{\varnothing\}. \tag{2}$$

**Definition 3.2** (Refinable online prediction problem)**.** *A refinable online prediction problem is a tuple*

$$\mathfrak{P} = (\Omega, \mathcal{Y}, \mathsf{A}, P, L, \mathcal{O}, \mathcal{U}, c),$$

*where $\Omega$ is finite, $Y : \Omega \to \mathcal{Y}$ is the consequence variable, $P$ is the sampling distribution, $L : \mathcal{Y} \times \mathsf{A} \to \mathbb{R}$ has finite risk for admissible predictors, $\mathcal{O} \subseteq 2^{\Omega}$ is the pre-outcome observable sigma-algebra, $\mathcal{U} \subseteq \{0,1\}^{\Omega}$ is a class of admissible binary distinctions that are $\mathcal{O}$-measurable, and $c : \mathcal{U} \to \mathbb{R}_+$ assigns refinement costs. Bounded losses are required only in finite-sample concentration statements, where they are stated explicitly. The $\mathcal{O}$-measurability condition prevents a prediction-time distinction from depending directly on the consequence label; pure value-of-information examples can be recovered by taking $\mathcal{O} = 2^{\Omega}$.*

*The initial runtime partition is assumed to be prediction-time observable:*

$$\sigma(\Pi_0) \subseteq \mathcal{O}.$$

*Since every accepted distinction $U_t \in \mathcal{U}$ is $\mathcal{O}$-measurable, induction gives $\sigma(\Pi_t) \subseteq \mathcal{O}$ for every reachable partition. Thus observing the current atom is itself a pre-outcome observation, not an additional label-dependent channel.*

*At round $t$, the learner maintains $S_t = (\Pi_t, a_t)$ with $a_t : \Pi_t \to \mathsf{A}$. A case $\omega_t \sim P$ is drawn, the learner observes only the atom $B_t \in \Pi_t$ containing $\omega_t$, predicts $a_t(B_t)$, observes $Y_t = Y(\omega_t)$, and then chooses one of two updates:*

$$\begin{aligned} \text{Repair}: &\quad \Pi_{t+1} = \Pi_t, \quad a_{t+1} \text{ may change}, \\ \text{Refine}: &\quad \Pi_{t+1} = \Pi_t \vee U_t \text{ for some } U_t \in \mathcal{U}. \end{aligned}$$

*The cumulative objective is prediction loss plus refinement cost,*

$$\mathcal{L}_T = \sum_{t=1}^{T} L(Y_t, a_t(B_t)) + \lambda \sum_{t:\text{Refine}} c(U_t).$$

**Definition 3.3** (Fixed-information repair update)**.** *Let a parameterized runtime predictor factor through a fixed information map $I : \Omega \to \mathcal{Z}$:*

$$f_\psi(\omega) = a_\psi(I(\omega)).$$

*An update of $\psi$ is a fixed-information repair update if $I$ is unchanged. The update rule may be a gradient step, a closed-form sufficient-statistic update, a cache write, or any other optimizer [RHW86, Zin03, SS12, GCJ17, KLJ+20, BHM+16, SIS21]; what makes it repair is the invariance of the induced partition $\Pi(I)$, not the optimizer used.*

# 4 The Repair-Only Obstruction

If the partition is fixed, the learner cannot beat the Bayes risk of that partition, no matter how sophisticated the repair update is. This is the fixed-information specialization of the classical decision-theoretic fact that a decision rule cannot exploit information it is not allowed to condition on [Bla53, Ber85].

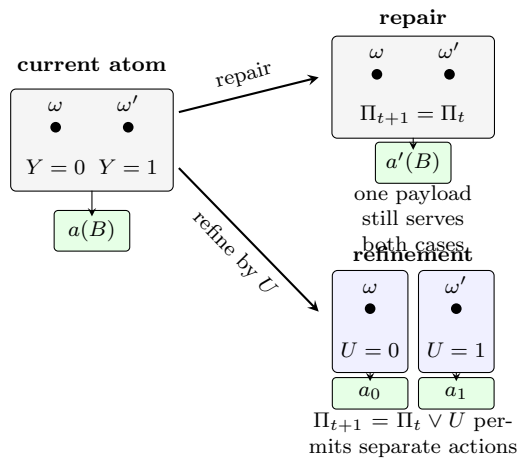


Figure 1: Repair versus refinement. Repair changes the payload assigned to an existing atom but preserves the equivalence relation. Refinement joins the partition with a distinction $U$, splitting the old atom only where the new bit matters and allowing different local actions.

**Definition 4.1** (Repair gap and refinement gap)**.** *For a concrete predictor $f \in \mathsf{Pred}(\Pi)$ and a candidate refined partition $\Pi^\star$ that refines $\Pi$, define*

$$\Delta_{\text{repair}}(f, \Pi) = R_L(f) - R_L(\Pi), \tag{3}$$

$$\Delta_{\text{refine}}(\Pi, \Pi^\star) = R_L(\Pi) - R_L(\Pi^\star). \tag{4}$$

*The first gap is the residual error of the current predictor at fixed equivalence relation. The second is the value of changing the equivalence relation.*

**Theorem 4.2** (Runtime error decomposition)**.** *Let $f_t \in \mathsf{Pred}(\Pi_t)$ and let $\Pi^\star$ refine $\Pi_t$. Then*

$$R_L(f_t) - R_L(\Pi^\star) = \Delta_{\text{repair}}(f_t, \Pi_t) + \Delta_{\text{refine}}(\Pi_t, \Pi^\star). \tag{5}$$

*Both terms are nonnegative.*

*Proof.* Add and subtract $R_L(\Pi_t)$. The repair gap is nonnegative because $f_t$ is feasible for the infimum defining $R_L(\Pi_t)$. The refinement gap is nonnegative because every $\Pi_t$-measurable predictor is also measurable with respect to any refinement $\Pi^\star$. □

## 4.1 Repair-only lower bound

The pointwise contradiction inside a cell becomes a sequential lower bound. If the current partition collapses states that a refined oracle separates, no repair-only learner can avoid paying the corresponding Bayes-risk gap every round.

**Theorem 4.3** (Repair-only linear regret)**.** *Let $\Pi$ be a fixed partition and let $\Pi^\star$ be a refinement. Consider any learner whose round-$t$ prediction $\hat{f}_t$ is always in $\mathsf{Pred}(\Pi)$, possibly chosen adaptively from all previous observations. Then, for iid $\omega_t \sim P$,*

$$\mathbb{E}\left[\sum_{t=1}^{T} L(Y_t, \hat{f}_t(\omega_t))\right] \geq T R_L(\Pi).$$

*Consequently, if Bayes actions exist under $\Pi^\star$, then relative to an oracle using $\Pi^\star$,*

$$\mathbb{E}[\mathrm{Regret}_T] \geq T\left(R_L(\Pi) - R_L(\Pi^\star)\right).$$

*If the infimum under $\Pi^\star$ is not attained, the same statement holds in the epsilon-oracle sense: for every $\epsilon > 0$, regret against an $\epsilon$-optimal $\Pi^\star$-measurable oracle is at least $T(R_L(\Pi) - R_L(\Pi^\star) - \epsilon)$. Thus if $R_L(\Pi) > R_L(\Pi^\star)$, every repair-only learner suffers $\Omega(T)$ expected regret against refined or epsilon-refined oracles.*

*Proof.* Condition on the learner's history before round $t$. The chosen predictor $\hat{f}_t$ is $\Pi$-measurable, so by definition of $R_L(\Pi)$,

$$\mathbb{E}[L(Y_t, \hat{f}_t(\omega_t)) \mid \text{history}] \geq R_L(\Pi).$$

Taking expectation and summing over $t$ gives the first inequality. If Bayes actions exist on the atoms of $\Pi^\star$, the $\Pi^\star$ oracle achieves $R_L(\Pi^\star)$ per round by using them, so subtracting its cumulative risk gives the regret bound. Without attained Bayes actions, for every $\epsilon > 0$ choose an $\epsilon$-optimal atomwise predictor under $\Pi^\star$; subtracting its cumulative risk gives the epsilon-oracle bound. □

The displayed comparator gives the refined partition to the oracle for free. If regret includes a one-time refinement cost $C(\Pi^\star)$ for reaching $\Pi^\star$, the same argument gives

$$\mathbb{E}[\mathrm{Regret}_T] \geq T\left(R_L(\Pi) - R_L(\Pi^\star)\right) - \lambda C(\Pi^\star).$$

**Corollary 4.4** (Fixed-information gradient repair lower bound)**.** *Consider any online optimizer, including backpropagation, whose predictions at every round factor through a fixed information map $I$:*

$$\hat{f}_t(\omega) = a_{\psi_t}(I(\omega)).$$

*Then $\hat{f}_t \in \mathsf{Pred}(\Pi(I))$ for all $t$, so Theorem 4.3 applies with $\Pi = \Pi(I)$. In particular, if a refined partition $\Pi^\star$ has $R_L(\Pi(I)) > R_L(\Pi^\star)$, this fixed-information gradient repair suffers linear regret against the refined oracle. Backpropagation through parameters that change $I$ is outside this corollary; in the present model, such an update changes the information structure rather than merely repairing actions on fixed atoms.*

**Example 4.5** (Two-state separation)**.** *Let $\Omega = \{0, 1\}$, $P(0) = P(1) = 1/2$, and $Y = \omega$. Under the trivial partition $\Pi = \{\{0, 1\}\}$, the best log-loss predictor is $q(Y = 0) = q(Y = 1) = 1/2$, so $R_{\log}(\Pi) = \log 2$. The refined partition $\Pi^\star = \{\{0\}, \{1\}\}$ has $R_{\log}(\Pi^\star) = 0$ in the noiseless case when point-mass predictions are allowed. Therefore any repair-only learner has expected regret $T \log 2$ against the refined oracle. This example is not about neural networks, caches, or trees. It is about equivalence relations: a learner that identifies two states cannot assign them two different consequences.*

**Corollary 4.6** (Contradiction requires distinction)**.** *Let $\Pi$ be a partition and let $y : \Omega \to \mathsf{A}$ be a required deterministic output. If $\omega, \omega'$ lie in the same atom of $\Pi$ but $y(\omega) \neq y(\omega')$, then no predictor in $\mathsf{Pred}(\Pi)$ satisfies both requirements.*

*Proof.* Every $f \in \mathsf{Pred}(\Pi)$ is constant on the atom containing $\omega$ and $\omega'$, so $f(\omega) = f(\omega')$. Satisfying both requirements would imply $y(\omega) = y(\omega')$, a contradiction. □

### 4.2 Sigma-algebra extension

The finite partition model is the main computational model. The sigma-algebra notation is the measure-theoretic extension used for value identities and language-model interpretations [Bil95, Kal02]. In this formulation, $L$ is measurable with finite expectation for the actions considered.

**Definition 4.7** ($\mathcal{F}$-measurable predictor and Bayes action)**.** *On a probability space* $(\Omega, \mathcal{E}, \mathbb{P})$*, an information structure is a sub-sigma-algebra* $\mathcal{F} \subseteq \mathcal{E}$*. For a measurable action space* $(\mathsf{A}, \Sigma_{\mathsf{A}})$*, a predictor* $a : \Omega \to \mathsf{A}$ *is* $\mathcal{F}$*-measurable if*

$$a^{-1}(C) \in \mathcal{F} \qquad \textit{for every } C \in \Sigma_{\mathsf{A}}.$$

*The admissible predictor class and Bayes risk are*

$$\mathsf{Pred}(\mathcal{F}) = \{a : \Omega \to \mathsf{A} : a \textit{ is } (\mathcal{F}, \Sigma_{\mathsf{A}})\textit{-measurable}\}, \qquad R_L(\mathcal{F}) = \inf_{a \in \mathsf{Pred}(\mathcal{F})} \mathbb{E}[L(Y, a)].$$

*When the infimum is attained, any minimizer is an* $\mathcal{F}$*-Bayes action and is denoted* $a^\star_{\mathcal{F}}$*. A random variable* $b$ *has an* $\mathcal{F}$*-measurable version if there exists an* $\mathcal{F}$*-measurable random variable* $\tilde{b}$ *such that* $\tilde{b} = b$ *almost surely.*

For a finite partition $\Pi$, Definition 4.7 recovers Definition 2.1 by taking $\mathcal{F} = \sigma(\Pi)$ and the action space discrete.

Implementations often have fixed pre-existing prediction outputs that are not created by the runtime refinement mechanism, such as a backbone distribution or other fixed pre-outcome features used outside DGM routing. We write this base information as a sigma-algebra $\mathcal{B}$ and measure runtime refinements through the total information $\mathcal{B} \vee \mathcal{F}_t$. The full hidden state used to propose or instantiate distinctions should not automatically be included as freely conditionable base information: if $\mathcal{B}$ contains $h$, then every edge predicate $g_e(h)$ and anchor-order event is already $\mathcal{B}$-measurable, so the unrestricted sigma-algebra refinement gap becomes trivial. Thus the refinement gap relative to a target $\mathcal{F}^\star$ is

$$R_L(\mathcal{B} \vee \mathcal{F}_t) - R_L(\mathcal{B} \vee \mathcal{F}^\star).$$

Repairs keep $\mathcal{F}_t$ fixed, while refinements replace $\mathcal{F}_t$ by $\mathcal{F}_t \vee \sigma(U_t)$. All monotonicity and value identities below apply after joining both sides with the same fixed $\mathcal{B}$.

Section 6 uses this notation to characterize exactly when a richer information structure is useful.

## 5 Minimal Refinement

Adding a distinction has a canonical minimal form: split exactly the atoms crossed by that distinction. Once a contradiction shows that the current atom is too coarse, the next question is not how to grow a large model. It is which information must be added. The primitive operation in this paper is minimal refinement: given an information structure and evidence that a new event or variable must be observable, add that observability and nothing else. We state the finite partition theorem first, then the sigma-algebra form. The latter is the standard measure-theoretic join; the former is its finite special case [Bil95, Kal02].

### 5.1 The finite refinement rule

**Definition 5.1** (Partition-measurable event and finite split)**.** *Let $\mathcal{P}$ be a finite partition of $\Omega$. An event $D \subseteq \Omega$ is $\mathcal{P}$-measurable if it is a union of atoms of $\mathcal{P}$. For any event $D$, the finite split of $\mathcal{P}$ by $D$ is*

$$\begin{aligned}\mathcal{P}_D = &\{B \cap D : B \in \mathcal{P}, B \cap D \neq \varnothing\} \\ &\cup \{B \cap D^c : B \in \mathcal{P}, B \cap D^c \neq \varnothing\}.\end{aligned} \tag{6}$$

*This keeps exactly the nonempty pieces obtained by cutting each old atom by $D$.*

**Theorem 5.2** (Minimal finite refinement)**.** *Let $\mathcal{P}$ be a finite partition of $\Omega$ and let $D \subseteq \Omega$. The partition $\mathcal{P}_D$ is the unique minimal partition that refines $\mathcal{P}$ and makes $D$ measurable. More precisely, if $\mathcal{Q}$ refines $\mathcal{P}$ and $D$ is $\mathcal{Q}$-measurable, then $\mathcal{Q}$ refines $\mathcal{P}_D$.*

*Proof.* Each old atom $B \in \mathcal{P}$ is replaced by the nonempty sets among $B \cap D$ and $B \cap D^c$, so the resulting sets are disjoint, cover $\Omega$, and each lies inside an atom of $\mathcal{P}$. Hence $\mathcal{P}_D$ is a refinement of $\mathcal{P}$. Moreover,

$$D = \bigcup_{B \in \mathcal{P}} (B \cap D),$$

so $D$ is a union of $\mathcal{P}_D$-atoms. Now let $\mathcal{Q}$ refine $\mathcal{P}$ and make $D$ measurable. For every $Q \in \mathcal{Q}$, there is $B \in \mathcal{P}$ with $Q \subseteq B$, and measurability of $D$ with respect to $\mathcal{Q}$ implies either $Q \subseteq D$ or $Q \subseteq D^c$. Thus $Q$ is contained in either $B \cap D$ or $B \cap D^c$, i.e., in an atom of $\mathcal{P}_D$. Therefore $\mathcal{Q}$ refines $\mathcal{P}_D$. □

The theorem gives a canonical update. The evidence determines the least refined representation: atoms untouched by $D$ remain unchanged, while atoms crossed by $D$ split into the two pieces that the evidence distinguishes.

### 5.2 The sigma-algebra form

For general spaces, the same operation is the join of sigma-algebras. If the current information is $\mathcal{F}_t$ and the evidence is a variable $U_t$, the minimal updated information is

$$\mathcal{F}_{t+1} = \mathcal{F}_t \vee \sigma(U_t). \tag{7}$$

**Definition 5.3** (Generated sigma-algebra and join)**.** *For a random variable $U$, $\sigma(U)$ denotes the smallest sigma-algebra with respect to which $U$ is measurable. For two sigma-algebras $\mathcal{F}$ and $\mathcal{H}$, their join is*

$$\mathcal{F} \vee \mathcal{H} = \sigma(\mathcal{F} \cup \mathcal{H}),$$

*the smallest sigma-algebra containing both. In particular, $\mathcal{F} \vee \sigma(U)$ is the information structure obtained by adding observability of $U$ to $\mathcal{F}$.*

**Theorem 5.4** (Minimal sigma-algebra refinement)**.** *Let $\mathcal{F} \subseteq \mathcal{E}$ be a sigma-algebra and let $U$ be a random variable. The join $\mathcal{F} \vee \sigma(U)$ is the smallest sigma-algebra $\mathcal{G}$ such that $\mathcal{F} \subseteq \mathcal{G}$ and $U$ is $\mathcal{G}$-measurable.*

*Proof.* By definition, $\mathcal{F} \vee \sigma(U) = \sigma(\mathcal{F} \cup \sigma(U))$, so it contains $\mathcal{F}$ and makes $U$ measurable. If another sigma-algebra $\mathcal{G}$ contains $\mathcal{F}$ and makes $U$ measurable, then $\mathcal{F} \cup \sigma(U) \subseteq \mathcal{G}$. Since $\mathcal{G}$ is a sigma-algebra, $\sigma(\mathcal{F} \cup \sigma(U)) \subseteq \mathcal{G}$. □

Thus the same object governs finite decision-tree splits and measurable-space refinement. A distinction is not an auxiliary feature added after learning; it is a change in the sigma-algebra of what the learner may condition on. The obstruction in Section 4 says when such a change is necessary; minimal refinement says how little information must be added.

# 6 The Value of a Distinction

Minimal refinement says how to add a distinction; it does not license every possible distinction. The value question is task-dependent: when does the new distinction actually change the best achievable prediction? We measure this by the decrease in optimal risk after the information structure is refined, in the same decision-theoretic sense used in classical comparisons of statistical experiments and value of information [Bla53, Ber85].

The identities in this section are population Bayes-risk statements and require the relevant expectations, entropies, or second moments to be finite. Bounded-loss assumptions enter only in the empirical concentration and validation results.

**Definition 6.1** (Distinction value)**.** *For information structures $\mathcal{F} \subseteq \mathcal{G}$, the value of refining $\mathcal{F}$ to $\mathcal{G}$ under loss $L$ is*

$$V_L(\mathcal{F}, \mathcal{G}) = R_L(\mathcal{F}) - R_L(\mathcal{G}).$$

*For a binary distinction $U$, its conditional value at $\mathcal{F}$ is*

$$V_L(U \mid \mathcal{F}) = R_L(\mathcal{F}) - R_L(\mathcal{F} \vee \sigma(U)).$$

*In the finite partition model, the analogous value is $V_L(U \mid \Pi) = R_L(\Pi) - R_L(\Pi \vee U)$.*

## 6.1 Risk monotonicity

The first fact is purely order-theoretic. If $\mathcal{G}$ contains all events in $\mathcal{F}$, then every $\mathcal{F}$-measurable predictor is also $\mathcal{G}$-measurable. The decision class has only grown; this is the Bayes-risk analogue of Blackwell's monotonicity of decision value under more informative experiments [Bla53].

**Theorem 6.2** (Bayes-risk monotonicity)**.** *If $\mathcal{F} \subseteq \mathcal{G}$, then for every loss $L$ for which both risks are well-defined,*

$$R_L(\mathcal{G}) \leq R_L(\mathcal{F}).$$

*Proof.* Every $\mathcal{F}$-measurable action is also $\mathcal{G}$-measurable. Taking the infimum of the same expected loss over the larger feasible set gives the claim. □

This is a population statement. It says that information cannot hurt the best possible decision rule. It does not say that a finite implementation should refine without restraint. Statistical estimation, finite samples, and model selection can overfit; those are algorithmic questions, not failures of the information order. This is why the DGM algorithm later uses penalties, thresholds, and sample-split scoring before committing a new concept.

### 6.2 Loss-relevant refinement

A distinction is useful only if it changes the Bayes-optimal decision. The next theorem is the decision-theoretic core of the paper: zero refinement value means the refined optimum was already expressible under the old information.

**Theorem 6.3** (Loss-relevant refinement)**.** *Let $\mathcal{F} \subseteq \mathcal{G} \subseteq \mathcal{E}$. Assume Bayes actions exist under $\mathcal{F}$ and $\mathcal{G}$, and that the $\mathcal{G}$-Bayes action is almost surely unique. Then*

$$R_L(\mathcal{F}) - R_L(\mathcal{G}) = 0$$

*if and only if $a^\star_{\mathcal{G}}$ has an $\mathcal{F}$-measurable version.*

*Proof.* If $a^\star_{\mathcal{G}}$ is $\mathcal{F}$-measurable, then it is feasible for $R_L(\mathcal{F})$, so

$$R_L(\mathcal{F}) \leq \mathbb{E}[L(Y, a^\star_{\mathcal{G}})] = R_L(\mathcal{G}).$$

Monotonicity gives the reverse inequality. Conversely, if the risks are equal and $a^\star_{\mathcal{F}}$ is an $\mathcal{F}$-Bayes action, then $a^\star_{\mathcal{F}}$ is also feasible under $\mathcal{G}$ and achieves $R_L(\mathcal{G})$. Almost sure uniqueness under $\mathcal{G}$ forces $a^\star_{\mathcal{F}} = a^\star_{\mathcal{G}}$ almost surely, so $a^\star_{\mathcal{G}}$ has an $\mathcal{F}$-measurable version. □

### 6.3 Log loss

For a finite target variable $Y$, log loss asks the learner to output a conditional distribution. The optimal prediction under $\mathcal{F}$ is the conditional law of $Y$ given $\mathcal{F}$, and the optimal risk is conditional entropy, a standard identity for logarithmic scoring rules and information theory [CT06, GR07].

**Theorem 6.4** (Log-loss value)**.** *Let $Y$ be finite and let the loss be $-\log q(Y)$. If $\mathcal{F} \subseteq \mathcal{G}$, then*

$$R_{\log}(\mathcal{F}) - R_{\log}(\mathcal{G}) = I(Y; \mathcal{G} \mid \mathcal{F}).$$

Here $I(Y; \mathcal{G} \mid \mathcal{F})$ denotes $H(Y \mid \mathcal{F}) - H(Y \mid \mathcal{G})$. Writing

$$p_{\mathcal{F}}(y) = \mathbb{P}(Y = y \mid \mathcal{F}), \qquad p_{\mathcal{G}}(y) = \mathbb{P}(Y = y \mid \mathcal{G}),$$

the same identity has the conditional-KL form

$$R_{\log}(\mathcal{F}) - R_{\log}(\mathcal{G}) = \mathbb{E}\left[D_{\mathrm{KL}}(p_{\mathcal{G}}(\cdot) \| p_{\mathcal{F}}(\cdot))\right]. \tag{8}$$

Thus, for classification and language modeling, a refinement is useful exactly when it changes the conditional consequence distribution with positive probability. If the new bit does not tell us anything about the next consequence beyond the old information, it is a gratuitous distinction, even if it separates inputs.

**Corollary 6.5** (Binary distinction value)**.** *Let $U \in \{0, 1\}$ be a candidate distinction and let $\mathcal{G} = \mathcal{F} \vee \sigma(U)$. Under log loss,*

$$\begin{aligned} R_{\log}(\mathcal{F}) - R_{\log}(\mathcal{G}) &= I(Y; U \mid \mathcal{F}) \\ &= \mathbb{E}\left[\sum_{u \in \{0,1\}} \mathbb{P}(U = u \mid \mathcal{F}) D_{\mathrm{KL}}(\mathbb{P}(Y \in \cdot \mid \mathcal{F}, U = u) \| \mathbb{P}(Y \in \cdot \mid \mathcal{F}))\right]. \end{aligned}$$

### 6.4 Squared loss

For $Y \in L^2(\Omega; \mathbb{R}^d)$ and squared loss, the optimal predictor under $\mathcal{F}$ is $\mathbb{E}[Y \mid \mathcal{F}]$, the $L^2$ projection onto the closed subspace of $\mathcal{F}$-measurable random variables [Bil95, Kal02]. Refinement helps precisely when it changes the conditional mean.

**Theorem 6.6** (Squared-loss value)**.** *Let $Y \in L^2(\Omega; \mathbb{R}^d)$ and let $L(Y, a) = \|Y - a\|_2^2$. If $\mathcal{F} \subseteq \mathcal{G}$, then*

$$R_2(\mathcal{F}) - R_2(\mathcal{G}) = \mathbb{E}\left[\|\mathbb{E}[Y \mid \mathcal{G}] - \mathbb{E}[Y \mid \mathcal{F}]\|_2^2\right].$$

The identity is the Hilbert-space analogue of the log-loss result. A distinction has squared-loss value when the cells it creates have different conditional means. In regression language, refinement is worth paying for when it separates consequences, not merely when it separates inputs.

### 6.5 Minimal loss-sufficient refinement

Minimal refinement in Section 5 adds the least information needed to observe a proposed variable. The loss-sufficient question is slightly different: among the refinements inside $\mathcal{G}$, what is the least information needed to attain the $\mathcal{G}$-Bayes risk?

**Theorem 6.7** (Minimal loss-sufficient refinement)**.** *Work in the measurable-action convention of Section 2. Let $\mathcal{F} \subseteq \mathcal{G}$ and assume the $\mathcal{G}$-Bayes action $a^\star_{\mathcal{G}} : \Omega \to \mathsf{A}$ exists as a $(\mathcal{G}, \Sigma_{\mathsf{A}})$-measurable map and is almost surely unique. Also assume the Bayes infimum is attained for every intermediate sigma-algebra $\mathcal{H}$ with $\mathcal{F} \subseteq \mathcal{H} \subseteq \mathcal{G}$ that is considered below. Up to null sets, the smallest sigma-algebra $\mathcal{H}$ satisfying*

$$\mathcal{F} \subseteq \mathcal{H} \subseteq \mathcal{G}, \qquad R_L(\mathcal{H}) = R_L(\mathcal{G})$$

*is*

$$\mathcal{F} \vee \sigma(a^\star_{\mathcal{G}}).$$

*For finite $Y$ under log loss, the corresponding smallest sufficient refinement is*

$$\mathcal{F} \vee \sigma(p_{\mathcal{G}}), \qquad p_{\mathcal{G}}(\cdot) = \mathbb{P}(Y \in \cdot \mid \mathcal{G}).$$

*Proof.* The action $a^\star_{\mathcal{G}}$ is measurable with respect to $\mathcal{F} \vee \sigma(a^\star_{\mathcal{G}})$, so this refinement attains $R_L(\mathcal{G})$. If any $\mathcal{H}$ with $\mathcal{F} \subseteq \mathcal{H} \subseteq \mathcal{G}$ also attains $R_L(\mathcal{G})$, Theorem 6.3 applied to $\mathcal{H} \subseteq \mathcal{G}$ implies that $a^\star_{\mathcal{G}}$ has an $\mathcal{H}$-measurable version. Hence $\mathcal{F} \vee \sigma(a^\star_{\mathcal{G}}) \subseteq \mathcal{H}$ up to null sets. Under log loss, the Bayes action is the conditional law $p_{\mathcal{G}}$, giving the final statement. □

## 7 Empirical Split Scores and Finite-Sample Refinement

Population refinement value becomes empirical information gain or variance reduction, but finite samples require penalties, margins, and held-out validation.

### 7.1 Finite empirical scores

**Definition 7.1** (Empirical distinction scores)**.** *Suppose an atom $B$ contains samples $(x_j, y_j)$ and a candidate distinction $g : B \to \{0,1\}$ splits it into $B_0$ and $B_1$. The formulas below are evaluated for nontrivial empirical splits with $|B_0|, |B_1| > 0$. A candidate with an empty empirical child is assigned score zero and is not accepted by a positive-gain split rule.*

*For classification, let $\hat{p}_B$, $\hat{p}_{B_0}$, and $\hat{p}_{B_1}$ be empirical label distributions. The empirical log-loss improvement is*

$$\Delta_{\log}(B, g) = |B|\, H(\hat{p}_B) - |B_0|\, H(\hat{p}_{B_0}) - |B_1|\, H(\hat{p}_{B_1}).$$

*Equivalently,*

$$\Delta_{\log}(B, g) = |B|\, \widehat{I}(Y; g \mid B).$$

*The normalized empirical edge score is therefore*

$$\widehat{I}(Y; g \mid B) = H(\hat{p}_B) - \sum_{b \in \{0,1\}} \frac{|B_b|}{|B|} H(\hat{p}_{B_b}).$$

*For regression, define*

$$\hat{\mu}_B = \frac{1}{|B|} \sum_{j \in B} y_j, \qquad \mathrm{SSE}(B) = \sum_{j \in B} \|y_j - \hat{\mu}_B\|_2^2 .$$

*The empirical squared-loss improvement is*

$$\Delta_2(B, g) = \mathrm{SSE}(B) - \mathrm{SSE}(B_0) - \mathrm{SSE}(B_1).$$

*It also has the between-cell form*

$$\Delta_2(B, g) = |B_0|\, \|\hat{\mu}_{B_0} - \hat{\mu}_B\|_2^2 + |B_1|\, \|\hat{\mu}_{B_1} - \hat{\mu}_B\|_2^2 .$$

The population identities lead directly to these standard empirical split scores: information gain for classification and variance reduction for regression trees [Qui86, BFOS84, DH00]. They implement the same principle as Definition 6.1: split only when the proposed distinction has measurable consequence value. The DGM algorithm below turns this population rule into a guarded empirical decision.

### 7.2 Distinction complexity

**Definition 7.2** (Distinction complexity)**.** *Let $\Pi$ be an initial partition, let $\Pi^\star$ be a target refinement, and let $\mathcal{U} \subseteq \{0,1\}^\Omega$ be a distinction class. For $\epsilon \geq 0$, the loss-dependent distinction complexity is*

$$d_L^\epsilon(\Pi, \Pi^\star; \mathcal{U}) = \min \left\{ m : \exists U_1, \ldots, U_m \in \mathcal{U} \text{ such that } R_L(\Pi \vee U_1 \vee \cdots \vee U_m) \leq R_L(\Pi^\star) + \epsilon \right\}, \quad (9)$$

*with value $+\infty$ if no such sequence exists.*

The refinement gap measures the value of a target information structure. Distinction complexity measures how many admissible bits are needed to reach it. Repair-only learning is the case $m = 0$. Decision trees, graph refinements, and prototype split systems differ partly in the distinction classes and ordering constraints they impose. DGM corresponds to a graph-generated class of local binary predicates proposed from confused runtime states.

### 7.3 Greedy recovery under realizability

The next theorem is a clean realizable upper bound for greedy refinement. It is intentionally stated for the abstract partition model rather than for Soft-DGM retrieval. The distinction class is understood to contain only prediction-time observable distinctions, as in Definition 3.2.

**Definition 7.3** (Target-respecting distinction)**.** *Let $\Pi^\star$ be a target partition. A distinction $U : \Omega \to \{0,1\}$ is $\Pi^\star$-respecting if it does not split any atom of $\Pi^\star$: for every $C \in \Pi^\star$, either $C \subseteq U^{-1}(0)$ or $C \subseteq U^{-1}(1)$.*

**Definition 7.4** (Impure atom and local split value)**.** *For an atom $B \in \Pi$, write $\Pi^\star|_B = \{C \in \Pi^\star : C \cap B \neq \varnothing\}$. The atom $B$ is impure relative to $\Pi^\star$ if $|\Pi^\star|_B| > 1$. For a candidate distinction $U$, its local value on $B$ is*

$$V_L(B, U) = R_L(\{B\}) - R_L(\{B\} \vee U)\,,$$

*where the risks are conditional on $\omega \in B$. Under log loss, $V_{\log}(B, U) = I(Y; U \mid \omega \in B)$.*

**Theorem 7.5** (Greedy recovery under target-respecting splits)**.** *Let*

$$K^+ = |\{C \in \Pi^\star : P(C) > 0\}|\,, \qquad m_0^+ = |\{B \in \Pi_0 : P(B) > 0\}|\,.$$

*Suppose the current partition $\Pi_0$ is initially a coarsening of $\Pi^\star$. Assume that every positive-mass impure current atom $B$ admits a $\Pi^\star$-respecting distinction $U \in \mathcal{U}$ such that $U$ splits $\Pi^\star|_B$ into two groups whose unions both have positive conditional probability under $P(\cdot \mid B)$ and*

$$V_L(B, U) \geq \gamma.$$

*Consider a greedy refinement algorithm that repeatedly selects a positive-mass impure current atom whenever one exists. Assume its candidate set contains at least one such distinction for every selected impure atom, its accepted candidates are $\Pi^\star$-respecting, and its empirical local values satisfy*

$$\left|\widehat{V}_L(B, U) - V_L(B, U)\right| \leq \gamma/4$$

*for all candidates it scores. If the algorithm accepts a split whenever $\widehat{V}_L(B, U) > \gamma/2$, then it accepts a useful split for every selected impure atom and recovers $\Pi^\star$ on the positive-mass support after at most $K^+ - m_0^+ \leq K^+ - 1$ accepted splits.*

*Proof.* Because every accepted split is $\Pi^\star$-respecting, the current partition remains a coarsening of $\Pi^\star$ after each accepted refinement. A candidate with true value at least $\gamma$ has empirical value at least $3\gamma/4$, so it exceeds the $\gamma/2$ threshold and is accepted when proposed. Conversely, any accepted candidate has true value greater than $\gamma/4$ by the uniform estimation event. A $\Pi^\star$-respecting split with positive value cannot be trivial on the selected atom: if one side had zero conditional mass, the conditional Bayes risk would be unchanged. Thus any accepted candidate separates the selected impure atom into two positive-mass unions of target atoms. It replaces one positive-mass current atom by two positive-mass unions of target atoms and increases the number of represented positive-mass current atoms by one. The algorithm keeps selecting impure positive-mass atoms until none remain. Starting from $m_0^+$ positive-mass current atoms and ending with at most $K^+$ positive-mass target atoms, at most $K^+ - m_0^+ \leq K^+ - 1$ accepted splits are needed. □

For finite $\mathcal{U}$, finite action class $\mathsf{A}$, and bounded loss, the event in Theorem 7.5 follows from a standard held-out union bound over scored split-action pairs [Hoe63, DGL96]. It suffices to score each accepted split with

$$m = O\left(\frac{1}{\gamma^2}\log\frac{K^+\,|\mathcal{U}|\,|\mathsf{A}|^3}{\delta}\right)$$

independent validation samples, up to constants and the bounded-loss range. For finite-label log-loss split scores or regression scores with infinite action spaces, the same conclusion requires the corresponding entropy, variance, or empirical-risk concentration assumption; bounded loss and finite $\mathcal{U}$ alone do not control the Bayes-action estimation error.

### 7.4 A finite-class oracle inequality

The same finite model gives a structural-risk bound for searching over refinements. Let $\mathfrak{P}_B(\mathcal{U})$ be the set of partitions obtainable from an initial partition $\Pi_0$ by at most $B$ global distinctions from finite $\mathcal{U}$, where each distinction is applied by the join operation in (2). If $\Pi_0$ has $m_0$ atoms, every $\Pi \in \mathfrak{P}_B(\mathcal{U})$ has at most $m_0 2^B$ atoms, because one binary distinction can cut every current atom. The sharper $m_0 + B$ count applies only to a different local-split class in which each step is restricted to split a single current atom.

**Theorem 7.6** (Finite-class refinement oracle inequality)**.** *Assume $L \in [0,1]$ and $\mathsf{A}$ is finite. Let $\widehat{R}_L(\Pi)$ be the empirical risk of the best atomwise action for $\Pi$ on $n$ iid validation samples, and let*

$$\widehat{\Pi} \in \operatorname*{argmin}_{\Pi\in\mathfrak{P}_B(\mathcal{U})}\left\{\widehat{R}_L(\Pi) + \lambda\,|\Pi|\right\}.$$

*Then with probability at least $1-\delta$,*

$$R_L(\widehat{\Pi}) + \lambda\left|\widehat{\Pi}\right| \le \min_{\Pi\in\mathfrak{P}_B(\mathcal{U})}\{R_L(\Pi) + \lambda\,|\Pi|\} + 2\sqrt{\frac{B\log|\mathcal{U}| + m_0 2^B\log|\mathsf{A}| + \log(B+1) + \log(2/\delta)}{2n}}.$$

*Proof.* For any fixed sequence of at most $B$ distinctions and any assignment of actions to the resulting at most $m_0 2^B$ atoms, Hoeffding's inequality controls the empirical-population risk deviation. The number of sequence lengths is at most $B+1$, the number of distinction sequences is at most $|\mathcal{U}|^B$, and the number of action assignments for any resulting partition is at most $|\mathsf{A}|^{m_0 2^B}$. Thus the number of partition-action pairs is at most $(B+1)\,|\mathcal{U}|^B\,|\mathsf{A}|^{m_0 2^B}$. A union bound gives a uniform deviation $\epsilon$ equal to the square-root term without the leading factor 2. On this event, empirical penalized risk and population penalized risk differ by at most $\epsilon$ for every candidate. Applying the usual empirical-minimizer argument gives the displayed $2\epsilon$ bound. □

## 8 Distinction Graph Machines: A Data Structure for Refinable Partitions

DGM implements refinable information structures as a graph: edges generate distinctions and nodes store repairable memories. The ingredients are related to decision-tree refinement, adaptive category creation, prototype memories, and external neural memories, but DGM uses them to implement the repair/refinement distinction [BFOS84, DH00, CG87b, Gro13, Koh90, WCB15,

GWR+16]. The theory so far gives a diagnostic: decide whether an observed error is better explained by $\Delta_{\text{repair}}$ at fixed information or by $\Delta_{\text{refine}}$ from missing distinctions. A runtime implementation therefore needs a state representation that can both repair local statistics and add distinctions. DGM is the data-structure realization of the abstract refinable-partition model.

### 8.1 Why a graph, not a tree?

**Definition 8.1** (DGM concept)**.** *A DGM concept is a memory location selected by a graph-generated hard-route map and equipped with a local memory. It is not claimed to be a human-interpretable semantic concept and need not correspond one-to-one with an atom of the edge partition. Local memories live at graph nodes, and distinction predicates live on edges between nodes that have been confused.*

The central object is

$$\text{DGM} = \text{graph-generated information structure} + \text{local memory repair}.$$

The graph is not metadata: its edges generate a finite edge-skeleton information structure and gate the read path, while anchor order completes the exact hard route. The partition and generated-sigma-algebra language follows standard finite measurable-space constructions [Bil95, Kal02]. The main-text statements below give the operational theorem forms; full proofs are in Appendix K.

**Definition 8.2** (Hard-DGM and Soft-DGM)**.** *Hard-DGM is the formal algorithm: fixed anchors and accepted binary edges generate an edge skeleton, while the exact hard route is measured by the join of this edge skeleton with the anchor-distance ordering. A repair changes only local actions or memories and leaves the hard-route information fixed; a refinement adds an anchored concept, new edge generators, and the anchor-order events involving the new anchor. Soft-DGM is the practical relaxation used for sparse neural hidden states: movable centroids retrieve candidates, smooth edge gates approximate hard eligibility, and routing weights mix local memories.*

The partition-level guarantees are exact for Hard-DGM. Soft-DGM is covered only as an approximation under the candidate-recall and margin conditions in Theorem 8.9.

### 8.2 Hard-DGM state and invariants

**Definition 8.3** (Hard-DGM state and anchor edge)**.** *Let $\phi_\theta : \mathcal{X} \to \mathbb{R}^d$ be an encoder, write $h = \phi_\theta(x)$, and let $\mathsf{H} \subseteq \mathbb{R}^d$ denote the hidden-state space on which the runtime structure is evaluated. A Distinction Graph Machine has runtime state*

$$\mathcal{S}_t = \left(\{a_j, c_j, M_j, n_j\}_{j=1}^{N_t}, G_t\right), \qquad G_t = (V_t, E_t), \qquad V_t = \{1, \dots, N_t\}.$$

*Each component has a role forced by the refine-or-repair split. A runtime concept needs a stable identity, so $a_j \in \mathbb{R}^d$ is a frozen distinction anchor. Retrieval may adapt as examples arrive, so $c_j \in \mathbb{R}^d$ is a movable centroid used only by the soft implementation. State inside an adequate concept must be repairable, so $M_j$ is a local memory and $n_j$ is a usage count. If a concept is created because it was confused with existing concepts, that conflict becomes an edge in $E_t$. A new concept is initialized with $a_j = c_j = h$. Subsequent repair may move $c_j$, but anchors remain fixed once created, so the hard information structure is unchanged by centroid repair.*

*An edge $e = (i, j)$ stores a linear distinction*

$$u_e = \frac{a_i - a_j}{\|a_i - a_j\|_2}, \qquad b_e = \frac{1}{2} u_e^\top (a_i + a_j),$$

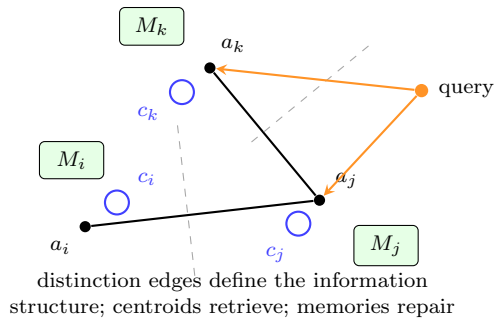


Figure 2: DGM state. Anchors are stable concept identities, centroids are movable retrieval statistics, distinction edges generate the information structure, and concept memories are repaired after a concept is judged adequate.

*with side labels* $s_{e,i} = +1$ *and* $s_{e,j} = -1$*. Its binary generator is*

$$g_e(h) = \mathbf{1}\{u_e^\top h > b_e\}.$$

**Definition 8.4** (Graph signature and edge-generated partition)**.** *The edge set induces the* edge skeleton *information structure on* $\mathsf{H}$*. The graph signature is*

$$\sigma_t^G(h) = \big(g_e(h)\big)_{e \in E_t} \in \{0,1\}^{E_t}.$$

*Two hidden states are indistinguishable by the current graph if their signatures agree. The nonempty level sets*

$$A_a^t = \{h \in \mathsf{H} : \sigma_t^G(h) = a\}, \qquad a \in \{0,1\}^{E_t},$$

*form a finite partition* $\mathcal{P}_t^G$ *of hidden-state space, and the generated sigma-algebra is* $\sigma(\mathcal{P}_t^G)$*. Adding a new edge is therefore a join with one binary generator:*

$$\mathcal{P}_{t+1}^G = \mathcal{P}_t^G \vee \sigma(g_e).$$

This edge partition is only the skeleton. The exact hard route also needs the ordering of eligible anchors by anchor distance; that order is added below as $\mathcal{F}_t^{\text{anchor-order}}$. Centroids and local memories are adaptive statistics attached to hard-route states or sparse neighborhoods, not generators of the exact Hard-DGM information structure. Concept nodes and graph-generated partition atoms are related but not identical: a node is a data-structure representative with memory and retrieval statistics; the formal information structure is generated by edge signatures and anchor-order events.

**Theorem 8.5** (Anchor distinction separates its endpoints)**.** *If* $a_i \neq a_j$ *and* $u_e, b_e$ *are defined as above for edge* $e = (i,j)$*, then*

$$u_e^\top a_i - b_e = \frac{1}{2}\|a_i - a_j\|_2, \qquad u_e^\top a_j - b_e = -\frac{1}{2}\|a_i - a_j\|_2.$$

*Thus each edge distinction separates the two anchors that caused it.*

Implementations should create such an edge only when the anchor separation clears a numerical guard,

$$\|a_i - a_j\|_2 > \eta_{\text{anchor}},$$

for a fixed $\eta_{\text{anchor}} > 0$. If a proposed new anchor is duplicate or nearly duplicate with a confused neighbor, the algorithm should skip that edge and fall back to repair, merge, or another admissible distinction.

**Theorem 8.6** (DGM graph generates a finite information structure)**.** *For any finite edge set $E_t$, equality of signatures $\sigma_t^G(h)$ is an equivalence relation whose classes form a finite edge-skeleton partition $\mathcal{P}_t^G$. Adding one edge $g$ refines this skeleton by $\mathcal{P}_t^G \vee \sigma(g)$.*

### 8.3 Soft-DGM edge-gated prediction

The hard route selects the nearest eligible anchor using fixed anchors, accepted edges, and anchor-distance order, so repairs that change only memories and centroids do not change $\mathcal{F}_t^{\mathrm{DGM}}$. Given $h$, Soft-DGM instead computes retrieval distances $d_j(h) = \|h - c_j\|_2^2$ to movable centroids. Moving centroids can change the smooth routing weights and therefore the actual Soft-DGM predictor, even when the Hard-DGM skeleton is fixed. Thus centroid repair is a repair in the formal hard-route structure, not a strict claim that the soft read map remains partition-measurable. A centroid-only top-$k$ set is not sufficient for the formal hard-route guarantee: if the hard eligible anchor never enters the candidate set, edge gates cannot recover it. Approximate-nearest-neighbor systems can make the retrieval term sublinear or hardware-efficient, but the formal guarantee still needs recall of the hard-route candidate [IM98, JDJ19]. We therefore use a recall-oriented candidate set

$$N(h) = N_{k_c}^{\mathrm{centroid}}(h) \cup N_{k_a}^{\mathrm{anchor}}(h) \cup \mathrm{GraphNeighbors}\Big(N_{k_c}^{\mathrm{centroid}}(h)\Big),$$

with duplicates removed and an optional budget cap after the union. The first term gives adaptive locality, the second protects the anchor-defined hard route, and the third recovers concepts connected by recent consequence conflicts. In exact small-scale implementations one may take $N(h) = \{1, \dots, N_t\}$. If $\mathrm{Inc}_t(j)$ is the set of edges incident to concept $j$, define the soft compatibility of $h$ with concept $j$ by

$$\log \chi_j(h) = \frac{1}{\sqrt{\max\{1, |\mathrm{Inc}_t(j)|\}}} \sum_{e \in \mathrm{Inc}_t(j)} \beta_e \log \mathrm{sigmoid}\left(\frac{s_{e,j}(u_e^\top h - b_e)}{\tau_e}\right),$$

where structural distinction edges have $\beta_e \in (0, 1]$ and the empty sum gives $\chi_j(h) = 1$. The degree normalization avoids systematically suppressing high-degree concepts while preserving hard rejection in the low-temperature limit. The edge-gated routing weights are

$$\alpha_j(h) = \frac{\exp(-d_j(h)/T)\chi_j(h)}{\sum_{r \in N(h)} \exp(-d_r(h)/T)\chi_r(h)}, \qquad j \in N(h). \tag{10}$$

The prediction is the local mixture

$$\hat{y} = \sum_{j \in N(h)} \alpha_j(h) M_j(h).$$

The hard route makes the information-structure connection explicit. A concept $j$ is eligible for $h$ if every incident edge bit places $h$ on the side recorded for $j$:

$$\begin{cases} g_e(h) = 1, & s_{e,j} = +1, \\ g_e(h) = 0, & s_{e,j} = -1, \end{cases} \qquad \text{for every } e \in \mathrm{Inc}_t(j).$$

This convention assigns boundary points to the nonpositive side because $g_e(h) = \mathbf{1}\{u_e^\top h > b_e\}$. The exact hard route used in the refinement theory routes to the nearest eligible anchor, falling back to the nearest anchor if no eligible concept is available. The soft read in (10) is the trainable

implementation: it may retrieve by movable centroids, but those centroids are retrieval statistics rather than formal information cells.

The distinction partition alone does not determine the whole exact hard route, because eligible concepts still need to be ordered. Anchor distances provide this stable order geometry. Let $\mathcal{F}_t^{\text{edge}} = \sigma(g_e : e \in E_t)$ and let $\mathcal{F}_t^{\text{anchor-order}}$ be the finite sigma-algebra generated by all pairwise anchor-distance comparison events

$$\{h : \|h - a_i\|_2^2 \le \|h - a_j\|_2^2\}, \qquad 1 \le i, j \le N_t,$$

with deterministic tie-breaking. The hard routing skeleton is measurable with respect to

$$\mathcal{F}_t^{\text{DGM}} = \mathcal{F}_t^{\text{edge}} \vee \mathcal{F}_t^{\text{anchor-order}}.$$

The exact DGM route map can be written as

$$I_{\mathcal{S}_t}(h) = ((g_e(h))_{e \in E_t}, \text{HardRoute}_{\mathcal{S}_t}(h)).$$

This map is measurable with respect to $\mathcal{F}_t^{\text{DGM}}$, so

$$\sigma(I_{\mathcal{S}_t}) \subseteq \mathcal{F}_t^{\text{edge}} \vee \mathcal{F}_t^{\text{anchor-order}}.$$

The inclusion can be strict: the full anchor-order sigma-algebra records pairwise order comparisons that may not affect the final selected concept. One may use $\mathcal{F}_t^{\text{DGM}}$ as a stable upper information structure with simple repair-stability proofs, or use the coarser exact-route sigma-algebra $\sigma(I_{\mathcal{S}_t})$ when the selected memory location itself is the desired state. Nodes are memory locations selected by this measurable route map; they need not be in one-to-one correspondence with atoms of the edge-skeleton partition. The soft read keeps the same anchored graph skeleton but may use movable centroids and smooth gates for locality; repairs can therefore change its effective smooth read geometry. Soft-DGM should be read as a differentiable approximation to the anchor-generated hard information map, with exact partition claims recovered only in the hard-route limit or under explicit approximation assumptions.

**Theorem 8.7** (Anchor-based hard routing is graph-plus-anchor-order measurable)**.** *With finite $E_t$, finite frozen anchors $a_1, \ldots, a_{N_t}$, and deterministic tie-breaking, the exact hard-route selected concept index, defined as the nearest eligible anchor with fallback to the nearest anchor, is measurable with respect to $\mathcal{F}_t^{\text{DGM}} = \mathcal{F}_t^{\text{edge}} \vee \mathcal{F}_t^{\text{anchor-order}}$.*

The next statement is analytic rather than structural: it applies to whichever fixed distances a soft read uses. With anchor distances it recovers the exact hard route; with centroid distances it describes the behavior of the soft retrieval approximation. It also exposes the candidate-recall requirement that links the formal hard route to the sparse implementation.

**Condition 8.8** (Candidate recall)**.** *Let $j^\star(h)$ be the unique concept selected by the exact hard route for query $h$. The sparse soft read satisfies candidate recall at $h$ if*

$$j^\star(h) \in N(h).$$

*If this condition fails, the soft read has no guarantee of selecting the hard route, regardless of how sharp the edge gates are.*

**Theorem 8.9** (Soft routing approaches hard routing)**.** *Assume candidate recall holds for $h$, and let $j^\star$ be the recalled hard-route concept. Split the remaining candidates into eligible competitors, which satisfy the hard structural constraints, and wrong-side competitors, which violate at least one structural edge. Eligible competitors are removed by distance: if $j^\star$ has distance margin $\delta > 0$ over every eligible competitor and the eligible/reference compatibility ratios are uniformly bounded, their total soft mass decays exponentially as $T \to 0$. Wrong-side competitors are removed by edge gates: if every wrong-side candidate violates some incident structural edge with weight at least $\beta_{\min} > 0$, signed margin at least $\delta_e > 0$, and degree at most $D_{\max}$, then its compatibility decays uniformly after degree normalization. The hard-route limit is therefore an ordered or controlled joint limit: edge temperature must suppress wrong-side candidates before distance temperature makes nearest-neighbor selection decisive. Equivalently, either the wrong-side/reference distance-score ratios remain uniformly bounded, or for distance advantage $\Delta_d$ of wrong-side candidates over an eligible reference,*

$$\frac{\beta_{\min}\delta_e}{\sqrt{D_{\max}}\tau_e} - \frac{\Delta_d}{T} \to +\infty.$$

*Under either condition, total wrong-side routing mass vanishes. Together with the distance margin for eligible competitors, this gives convergence to the hard route. Without candidate recall, the theorem gives no correctness guarantee for an omitted hard-route concept.*

**Algorithm 1** DGM-Predict

$\mathcal{S}_t = (\{a_j, c_j, M_j, n_j\}_{j=1}^{N_t}, G_t), \quad x \in \mathcal{X}$

$h \leftarrow \phi_\theta(x)$

$N(h) \leftarrow N_{k_c}^{\text{centroid}}(h) \cup N_{k_a}^{\text{anchor}}(h) \cup \text{GraphNeighbors}(N_{k_c}^{\text{centroid}}(h))$

$\chi_j(h) \leftarrow \exp\left\{ \frac{1}{\sqrt{\max\{1, |\text{Inc}_t(j)|\}}} \sum_{e \in \text{Inc}_t(j)} \beta_e \log \text{sigmoid}\big(s_{e,j}(u_e^\top h - b_e)/\tau_e\big) \right\}, \quad j \in N(h)$

$\alpha_j(h) \leftarrow \dfrac{\exp(-\|h - c_j\|_2^2/T)\chi_j(h)}{\sum_{r \in N(h)} \exp(-\|h - c_r\|_2^2/T)\chi_r(h)}, \quad j \in N(h)$

$\hat{a}_t(h) \leftarrow \sum_{j \in N(h)} \alpha_j(h) M_j(h)$

**return** $\hat{a}_t(h)$

## 8.4 Refine or repair on a graph

After observing consequence $y$, DGM scores empirical versions of the two gaps in Theorem 4.2. A repair candidate keeps the DGM information map fixed and updates only local state. A refinement candidate changes the information map by adding an anchored concept and distinction edges. The committed operation is the one whose held-out gain justifies its cost and safety margin.

Let $j^\star$ be the highest-weight concept under (10). Define local surprise

$$\rho_t = L(y, M_{j^\star}(h)).$$

Define neighborhood consequence disagreement on $N(h)$ by the task-appropriate local prediction divergence. For classification one may use

$$D_t = \max_{i,r \in N(h)} \text{TV}(p_i(\cdot \mid h), p_r(\cdot \mid h)),$$

where $p_j$ is the distribution represented by memory $M_j$. For regression one may use

$$D_t = \max_{i,r \in N(h)} \|\mu_i(h) - \mu_r(h)\|_2 \,,$$

and for language modeling the log-loss surprise $-\log p_{j^\star}(x_{t+1} \mid x_{\leq t})$ is the local disagreement signal. These quantities are proposal signals. They decide which candidates are worth scoring; they do not define repair or refinement.

All gap estimates below are computed on a held-out scoring buffer $\mathcal{B}_t^{\text{score}}$. Refinement proposals may use a disjoint proposal buffer $\mathcal{B}_t^{\text{prop}}$ together with the current observation; the scoring buffer is held out from proposal generation and from previous accept/reject decisions that determine the current state. Theorem 8.12 applies when each scoring decision uses fresh held-out samples, or samples not previously used to choose proposals or update the state. Reservoir sampling can maintain disjoint proposal and scoring streams, but reusing the same validation buffer adaptively requires reusable-holdout or adaptive-validation control [DFH+15b, DFH+15a]. Without that extra control, the empirical rule is a heuristic rather than the Hoeffding guarantee.

The edges created by a refinement are attached to a concrete confused-neighbor set. Let $\mathrm{Div}_{\mathcal{Y}}(M_i, M_r; h)$ denote a task-appropriate consequence divergence, such as total variation for classifiers, Euclidean mean distance for regression memories, or next-token distribution divergence for language models. Define

$$\mathrm{Confused}(h, y) = \{i \in N(h) : L(y, M_i(h)) > \tau_{\text{conflict}} \text{ or } \mathrm{Div}_{\mathcal{Y}}(M_i, M_{j^\star}; h) > \tau_{\text{disagree}}\} \,.$$

When a budget of at most $q$ new edges is used, DGM takes $\mathrm{Confused}_q(h, y)$ to be the $q$ highest-scoring members of this set under

$$\mathrm{score}_i(h, y) = \alpha_i(h) L(y, M_i(h)) + \gamma_{\text{div}} \,\mathrm{Div}_{\mathcal{Y}}(M_i, M_{j^\star}; h).$$

If the set is empty but refinement is otherwise accepted, the implementation falls back to the highest-score candidates in $N(h) \setminus \{j^\star\}$. Thus "confused neighbors" denotes a concrete operator rather than an informal phrase.

Repair is guarded rather than blindly committed. The implementation proposes a small set of repair candidates, such as a memory-only update, a memory-plus-centroid update, and one or more reduced centroid steps:

$$\mathcal{C}_{\text{repair}}(\mathcal{S}_t, h, y) = \{\mathcal{S}_t^{\text{mem}}, \mathcal{S}_t^{\text{mem+centroid}}, \mathcal{S}_t^{\text{shrink}}, \mathcal{S}_t\}.$$

Each candidate keeps anchors and edges fixed, so it preserves $I_{\mathcal{S}_t}$ and $\mathcal{F}_t^{\text{DGM}}$. On the scoring buffer, the empirical repair gain is

$$\widehat{\Delta}_{\text{repair}} = \widehat{R}(\mathcal{S}_t; \mathcal{B}_t^{\text{score}}) - \min_{\mathcal{S}' \in \mathcal{C}_{\text{repair}}} \widehat{R}(\mathcal{S}'; \mathcal{B}_t^{\text{score}}). \tag{11}$$

DGM's guarded repair candidate is

$$\mathcal{S}_{t+1} \in \operatorname*{argmin}_{\mathcal{S}' \in \mathcal{C}_{\text{repair}}} \widehat{R}(\mathcal{S}'; \mathcal{B}_t^{\text{score}}) \quad \text{subject to} \quad \widehat{R}(\mathcal{S}'; \mathcal{B}_t^{\text{score}}) \leq \widehat{R}(\mathcal{S}_t; \mathcal{B}_t^{\text{score}}). \tag{12}$$

The identity state is in $\mathcal{C}_{\text{repair}}$, so $\widehat{\Delta}_{\text{repair}} \geq 0$. Thus monotone repair is an enforced algorithmic property, not merely a theorem assumption. The anchor $a_{j^\star}$ is never moved by repair. Consequently, local memory repair and centroid adaptation do not rewrite previously accepted edge generators.

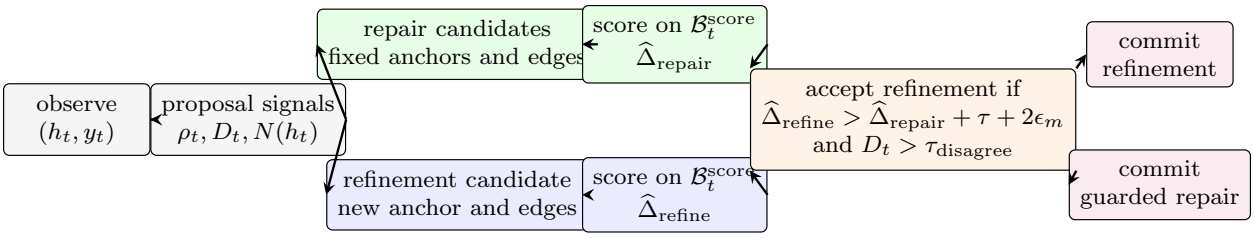


Figure 3: DGM refine-or-repair decision. Proposal signals only choose candidates to score; the committed update is selected by held-out empirical gains. A refinement changes the information structure only when its penalized gain beats the best non-worsening repair by the safety margin; otherwise DGM repairs local state while preserving anchors and edges.

For a triggered refinement, define the candidate index $j_{\text{new}} = N_t + 1$ and the proposed edge set

$$E_{\text{new}}(h, y) = \{(j_{\text{new}}, i) : i \in \text{Confused}_q(h, y),\ \|h - a_i\|_2 > \eta_{\text{anchor}}\}. \tag{13}$$

The corresponding candidate state creates

$$a_{j_{\text{new}}} = h, \qquad c_{j_{\text{new}}} = h, \qquad M_{j_{\text{new}}} = \text{InitMemory}(h, y),$$

with edge set $E_t \cup E_{\text{new}}(h, y)$. Let $\mathcal{S}_t^{\text{new}}$ denote this state, and let $\widehat{R}(\mathcal{S}; \mathcal{B}_t^{\text{score}})$ be the empirical local loss on the scoring buffer after routing with state $\mathcal{S}$. The empirical penalized refinement gain is

$$\widehat{\Delta}_{\text{refine}} = \widehat{R}(\mathcal{S}_t; \mathcal{B}_t^{\text{score}}) - \widehat{R}(\mathcal{S}_t^{\text{new}}; \mathcal{B}_t^{\text{score}}) - \lambda_{\text{concept}} - \lambda_{\text{edge}} |E_{\text{new}}(h, y)|. \tag{14}$$

Here $\lambda_{\text{concept}}$ is the penalty for creating the anchored concept and its induced anchor-order bookkeeping, while $\lambda_{\text{edge}} |E_{\text{new}}(h, y)|$ accounts for the accepted edge generators. Using the edge budget $q$ instead of the actual $|E_{\text{new}}(h, y)|$ is a conservative implementation choice that only makes the acceptance test stricter. The candidate is accepted only if it beats the repair gain by a safety margin:

$$\widehat{\Delta}_{\text{refine}} > \max\{\widehat{\Delta}_{\text{repair}}, 0\} + \tau + 2\epsilon_m \qquad \text{and} \qquad D_t > \tau_{\text{disagree}}. \tag{15}$$

Here $\epsilon_m$ is a statistical safety margin for a scoring buffer of size $m = |\mathcal{B}_t^{\text{score}}|$; it can be set to zero for a purely empirical implementation, or to the adaptive validation margin in Theorem 8.12. If the refinement test fails, DGM commits the guarded repair candidate in (12). This makes refinement a statistically guarded gap comparison rather than an unscored growth heuristic.

**Algorithm 2** DGM-Observe

$\mathcal{S}_t, \quad (x_t, y_t), \quad \mathcal{B}_t^{\text{prop}}, \quad \mathcal{B}_t^{\text{score}}$

$h_t \leftarrow \phi_\theta(x_t)$

**if** $N_t = 0$ **then**

  $\mathcal{S}_{t+1} \leftarrow (\{(h_t, h_t, \text{InitMemory}(h_t, y_t), 1)\}, (\{1\}, \varnothing))$

  **return** $\mathcal{S}_{t+1}$

**end if**

$\mathcal{N}_t \leftarrow N_{k_c}^{\text{centroid}}(h_t) \cup N_{k_a}^{\text{anchor}}(h_t) \cup \text{GraphNeighbors}(N_{k_c}^{\text{centroid}}(h_t))$

$\alpha_{t,j} \leftarrow \alpha_j(h_t), \quad j \in \mathcal{N}_t$

$j_t^\star \leftarrow \text{argmax}_{j \in \mathcal{N}_t} \alpha_{t,j}$

$\rho_t \leftarrow L(y_t, M_{j_t^\star}(h_t))$

$D_t \leftarrow \max_{i,r \in \mathcal{N}_t} \text{Div}_{\mathcal{Y}}(M_i, M_r; h_t)$

$\mathcal{C}_t^{\text{repair}} \leftarrow \mathcal{C}_{\text{repair}}(\mathcal{S}_t, h_t, y_t)$

$\widehat{\Delta}_t^{\text{repair}} \leftarrow \widehat{R}(\mathcal{S}_t; \mathcal{B}_t^{\text{score}}) - \min_{\mathcal{S}' \in \mathcal{C}_t^{\text{repair}}} \widehat{R}(\mathcal{S}'; \mathcal{B}_t^{\text{score}})$

$\mathcal{S}_t^{\text{repair}} \in \text{argmin}_{\substack{\mathcal{S}' \in \mathcal{C}_t^{\text{repair}} \\ \widehat{R}(\mathcal{S}'; \mathcal{B}_t^{\text{score}}) \le \widehat{R}(\mathcal{S}_t; \mathcal{B}_t^{\text{score}})}} \widehat{R}(\mathcal{S}'; \mathcal{B}_t^{\text{score}})$

$z_t \leftarrow \mathbf{1}\{\rho_t > \tau_{\text{repair}} \ \vee \ D_t > \tau_{\text{disagree}}\}$

**if** $z_t = 1$ **then**

  $E_t^{\text{new}} \leftarrow E_{\text{new}}(h_t, y_t), \quad \mathcal{S}_t^{\text{new}} \leftarrow \text{AddConcept}(\mathcal{S}_t, h_t, y_t, E_t^{\text{new}}; \mathcal{B}_t^{\text{prop}})$

  $\widehat{\Delta}_t^{\text{refine}} \leftarrow \widehat{R}(\mathcal{S}_t; \mathcal{B}_t^{\text{score}}) - \widehat{R}(\mathcal{S}_t^{\text{new}}; \mathcal{B}_t^{\text{score}}) - \lambda_{\text{concept}} - \lambda_{\text{edge}} |E_t^{\text{new}}|$

  $r_t \leftarrow \mathbf{1}\{\widehat{\Delta}_t^{\text{refine}} > \max\{\widehat{\Delta}_t^{\text{repair}}, 0\} + \tau + 2\epsilon_m \ \wedge \ D_t > \tau_{\text{disagree}}\}$

  **if** $r_t = 1$ **then**

    $\mathcal{S}_{t+1} \leftarrow \mathcal{S}_t^{\text{new}}$

    **return** $\mathcal{S}_{t+1}$

  **end if**

**end if**

$\mathcal{S}_{t+1} \leftarrow \mathcal{S}_t^{\text{repair}}$

**return** $\mathcal{S}_{t+1}$

**Definition 8.10** (Guarded monotone local repair)**.** *A guarded repair operator is monotone on scoring buffer $\mathcal{B}_t^{\text{score}}$ if it commits a candidate state $\mathcal{S}_{t+1}$ only when local memories and retrieval centroids may change, anchors and edges remain fixed, and*

$$\widehat{R}(\mathcal{S}_{t+1}; \mathcal{B}_t^{\text{score}}) \le \widehat{R}(\mathcal{S}_t; \mathcal{B}_t^{\text{score}}).$$

*The identity candidate $\mathcal{S}_{t+1} = \mathcal{S}_t$ is always allowed, so the guard is feasible even when every nontrivial repair would hurt the scoring buffer.*

**Theorem 8.11** (Refine-or-repair objective descent)**.** *Let the local scoring objective on a fixed scoring buffer $\mathcal{B}_t^{\text{score}}$ be*

$$J_{\mathcal{B}_t^{\text{score}}}(\mathcal{S}) = \widehat{R}(\mathcal{S}; \mathcal{B}_t^{\text{score}}) + \lambda_{\text{concept}} N_{\text{concept}}(\mathcal{S}) + \lambda_{\text{edge}} |E(\mathcal{S})|.$$

*If repair is committed by the guarded rule (12), then $J_{\mathcal{B}_t^{\text{score}}}$ does not increase. If a refinement adding one anchored concept and actual edge set $E_{\text{new}}$ is accepted only under (15), then the empirical penalized objective $J_{\mathcal{B}_t^{\text{score}}}$ decreases by more than $\widehat{\Delta}_{\text{repair}} + \tau + 2\epsilon_m$ and in particular by more than $\tau + 2\epsilon_m$.*

This is a local-buffer statement. It does not imply monotone descent of a global objective when the scoring buffer changes over time; a global finiteness claim requires a common potential or validation objective.

**Theorem 8.12** (Statistically safe adaptive refinement)**.** *Assume losses lie in* $[0,1]$*. Let* $(\mathfrak{H}_t)$ *be the filtration containing the past stream, the current DGM state, and all proposal-buffer information available before scoring at time* $t$*. Let* $\mathcal{C}_t$ *be a finite candidate class that is predictable with respect to* $\mathfrak{H}_t$*, and let* $\mathcal{B}_t^{\text{score}}$ *contain* $m_t$ *fresh held-out samples, or samples not previously used to choose proposals or update the state, independent of* $\mathfrak{H}_t$ *conditional on the current scoring distribution. For candidate* $g$*, let* $\widehat{G}_t(g)$ *be the empirical raw risk decrease on* $\mathcal{B}_t^{\text{score}}$ *before complexity cost, and let* $G_t(g)$ *be the corresponding population raw gain. Define*

$$\epsilon_t = \sqrt{\frac{\log(4t^2(|\mathcal{C}_t|+1)/\delta)}{2m_t}}.$$

*Then, with probability at least* $1-\delta$*, for every time* $t$ *and every* $g \in \mathcal{C}_t$*,*

$$\left|\widehat{G}_t(g) - G_t(g)\right| \le 2\epsilon_t.$$

*Hence an accepted refinement satisfying*

$$\widehat{G}_t(g) > \lambda \operatorname{cost}(g) + \tau + 2\epsilon_t$$

*equivalently* $\widehat{\Delta}_t^{\text{pen}}(g) = \widehat{G}_t(g) - \lambda \operatorname{cost}(g) > \tau + 2\epsilon_t$*, has positive population penalized gain after paying complexity cost and margin* $\tau$*, uniformly over all accepted times.*

**Corollary 8.13** (Bounded language-model refinement score)**.** *For language modeling, raw next-token negative log likelihood is unbounded. Fix* $L_{\max} > 0$ *and define the clipped normalized score*

$$\ell_{\text{clip}}(x_{\le t}, x_{t+1}) = \frac{1}{L_{\max}} \min\{-\log p(x_{t+1} \mid x_{\le t}), L_{\max}\}.$$

*If refinement proposal and scoring use* $\ell_{\text{clip}}$*, then Theorem 8.12 applies to clipped-loss refinement gain. An accepted refinement has positive clipped population gain after cost and margin with the stated high probability. This corollary does not claim positive gain for the raw unbounded negative log likelihood without additional tail assumptions.*

**Theorem 8.14** (Anchor-stable DGM information structure)**.** *Let*

$$\mathcal{F}_t^{\text{DGM}} = \sigma(g_e : e \in E_t) \vee \sigma\Big(\{h : \|h - a_i\|_2^2 \le \|h - a_j\|_2^2\} : 1 \le i, j \le N_t\Big).$$

*If a repair step changes only retrieval centroids* $c_j$*, local memories* $M_j$*, and counts* $n_j$*, while keeping anchors* $a_j$ *and edges* $E_t$ *fixed, then* $\mathcal{F}_{t+1}^{\text{DGM}} = \mathcal{F}_t^{\text{DGM}}$*. If a refinement adds a new anchor and new edge generators, then the updated information structure is the join of* $\mathcal{F}_t^{\text{DGM}}$ *with the new anchor-order events and the new edge generators.*

Thus the edge skeleton realizes the minimal join operation from Section 5. The exact hard-route DGM adds anchor-order events as routing infrastructure whenever a new anchor is inserted. Consequently, Hard-DGM is a structured implementation of refinement, but its exact-route information update is not always the single-event minimal refinement in the strict Section 5 sense.

**Corollary 8.15** (Finite number of accepted refinements)**.** *If there is a common nonnegative potential* $\Phi(\mathcal{S})$ *and every accepted refinement decreases* $\Phi$ *by at least* $\tau > 0$*, then the number of accepted refinements is at most* $\Phi(\mathcal{S}_0)/\tau$*. In particular, this applies to a fixed scoring buffer or validation objective. The local-buffer descent theorem alone should not be read as a global finiteness result when the scoring buffer changes over time.*

### 8.5 Data-structure operations

**Definition 8.16** (DGM data-structure operations)**.** *Viewed as a dynamic partition data structure, DGM implements four operations:*

$$\text{Query}(h), \qquad \text{Repair}(h, y), \qquad \text{Refine}(h, y, g), \qquad \text{Score}(g, \mathcal{B}).$$

*The maintained edge-skeleton invariant is*

$$\begin{aligned} \text{Repair} \quad &\Longrightarrow \quad \mathcal{P}^G(\mathcal{S}_{t+1}) = \mathcal{P}^G(\mathcal{S}_t), \\ \text{Refine}(g) \quad &\Longrightarrow \quad \mathcal{P}^G(\mathcal{S}_{t+1}) = \mathcal{P}^G(\mathcal{S}_t) \vee \sigma(g), \end{aligned}$$

*where $\mathcal{P}^G(\mathcal{S}_t)$ is the edge-generated skeleton partition. The exact hard-route invariant is*

$$\begin{aligned} \text{Repair} \quad &\Longrightarrow \quad \mathcal{F}^{\text{DGM}}(\mathcal{S}_{t+1}) = \mathcal{F}^{\text{DGM}}(\mathcal{S}_t), \\ \text{Refine} \quad &\Longrightarrow \quad \mathcal{F}^{\text{DGM}}(\mathcal{S}_{t+1}) = \mathcal{F}^{\text{DGM}}(\mathcal{S}_t) \vee \sigma(g_e : e \in E_{\text{new}}) \vee \sigma(\textit{new anchor-order events}). \end{aligned}$$

*Thus repair modifies payloads on the current structure, while refinement changes the structure by adding both edge generators and the order information induced by new anchors.*

**Theorem 8.17** (DGM data-structure cost)**.** *Assume $N_t$ concepts in $\mathbb{R}^d$, candidate set size $|N(h)| = k$, selected incident edge count $Q(h)$, retrieval cost $C_{\text{ret}}(N_t, d)$, and selected local-memory evaluation cost $C_{\text{mem}}$. Then*

$$\text{Query}(h) = O(C_{\text{ret}}(N_t, d) + Q(h)d + kd + C_{\text{mem}}).$$

*Here $Q(h)$ is an edge count and each dense linear edge gate costs $O(d)$ to evaluate. A repair adds the cost of scoring the proposed local-memory candidates on the scoring buffer. A refinement creating one anchor-centroid pair and $q$ guarded linear distinction edges adds $O(d + qd)$ state-update time, plus the indexing or comparison bookkeeping used to maintain anchor-order queries. With sparse categorical memories of average support $\bar{s}$, the state uses*

$$O(N_t(2d + \bar{s}) + |E_t|\, d)$$

*memory, up to indexing overhead.*

The theorem is an implementation bound rather than a statistical guarantee. It says that DGM realizes the abstract operation $\Pi \mapsto \Pi \vee U$ on the edge skeleton and the corresponding join update on $\mathcal{F}^{\text{DGM}}$ with local graph updates and sparse routing, provided the candidate retrieval layer supplies the relevant hard-route concepts.

**Comparison to gradient and memory baselines.** Backpropagation is not itself a repair or refinement operation; it is an optimizer. If it updates only parameters downstream of a fixed information map, it is a fixed-information repair update in the sense of Definition 3.3. If it updates the encoder or routing representation, it may change the induced partition and is outside the repair-only lower bound. Table 2 summarizes the resulting computational comparison against common online optimizers, caches, trees, and parameter-efficient adaptation modules [RHW86, KB15, GCJ17, KLJ+20, DH00, HGJ+19, HSW+22]. Let $P_{\text{tr}}$ be the number of trainable parameters updated by backpropagation, $A_{\text{bp}}$ the activation storage required for the backward pass over the adaptation window, $M$ the number of stored examples in a cache or $k$NN memory, $D_{\text{tree}}$ the tree depth, $S_{\text{leaf}}$ the per-leaf sufficient statistics, and $\bar{s}$ the average sparse categorical support per DGM concept. The table lists runtime-adaptation overhead beyond any shared frozen forward pass that computes $h$.

### 8.6 Canonical local memory

**Definition 8.18** (Calibrated categorical local memory)**.** *The local memory $M_j$ is the repair mechanism inside an already chosen concept. For classification and language modeling, the main-text canonical memory is a calibrated categorical memory rather than an unconstrained embedding score, consistent with proper probabilistic scores and calibration diagnostics for probability forecasts [Bri50, GR07, GPSW17]. Concept $j$ stores token or label counts $n_{j,y}$ and $n_j = \sum_y n_{j,y}$. Given a backbone distribution $p_0(y \mid h)$ and smoothing strength $\alpha_0 > 0$, define*

$$p_j(y \mid h) = \frac{n_{j,y} + \alpha_0 p_0(y \mid h)}{n_j + \alpha_0}. \tag{16}$$

*The routed memory distribution is*

$$p_{\mathrm{mem}}(y \mid h) = \sum_{j \in N(h)} \alpha_j(h) p_j(y \mid h), \tag{17}$$

*and the final prediction is the convex mixture*

$$p_{\mathrm{DGM}}(y \mid h) = (1 - \lambda_t) p_0(y \mid h) + \lambda_t p_{\mathrm{mem}}(y \mid h), \qquad \lambda_t \in [0, 1]. \tag{18}$$

This keeps the read path a valid probability distribution. It also gives the simple pointwise safety bound

$$-\log p_{\mathrm{DGM}}(y \mid h) \le -\log p_0(y \mid h) - \log(1 - \lambda_t)$$

whenever $\lambda_t < 1$. For log-loss experiments we use a stronger cumulative safeguard based on standard prediction-with-expert-advice and aggregating-algorithm bounds [Vov90, FS97, CBL06]. Let $\Lambda = \{\lambda_1, \ldots, \lambda_K\} \subseteq [0, 1]$ with $0 \in \Lambda$, define

$$q_{t,k}(y) = (1 - \lambda_k) p_0(y \mid h_t) + \lambda_k p_{\mathrm{mem}}(y \mid h_t),$$

and predict with a mixture $p_t(y) = \sum_k w_{t,k} q_{t,k}(y)$. After observing $y_t$, update the trust weights by

$$w_{t+1,k} = \frac{w_{t,k} q_{t,k}(y_t)}{\sum_{\ell=1}^{K} w_{t,\ell} q_{t,\ell}(y_t)}. \tag{19}$$

**Theorem 8.19** (No-harm log-loss trust aggregation, standard)**.** *Initialize $w_{1,k} = 1/K$ and update by (19). For any outcome sequence,*

$$\sum_{t=1}^{T} -\log p_t(y_t) \le \min_{k \in [K]} \sum_{t=1}^{T} -\log q_{t,k}(y_t) + \log K.$$

*Since $0 \in \Lambda$, one expert is the frozen backbone predictor, so*

$$\sum_{t=1}^{T} -\log p_t(y_t) \le \sum_{t=1}^{T} -\log p_0(y_t \mid h_t) + \log K.$$

*Proof.* Let $Z_t = \sum_k w_{1,k} \prod_{s=1}^{t} q_{s,k}(y_s)$. The posterior update implies $p_t(y_t) = Z_t / Z_{t-1}$, hence $\prod_{t=1}^{T} p_t(y_t) = Z_T$. For every $k$, $Z_T \ge K^{-1} \prod_{t=1}^{T} q_{t,k}(y_t)$. Taking negative logarithms and minimizing over $k$ gives the first bound. The second follows from the $\lambda = 0$ expert. □

Because $p_0(y \mid h)$, $M_j(h)$, and the soft weights can depend on the hidden state, the practical predictor need not be constant on atoms of the edge partition alone. The formal interpretation is the base-information convention from Section 2: let

$$\mathcal{B} = \sigma(p_0(\cdot \mid h), \text{fixed pre-outcome features used outside DGM routing}).$$

Then DGM refinements are claims about the additional runtime information in $\mathcal{F}_t^{\mathrm{DGM}}$, and predictors are measured as $\mathcal{B} \vee \mathcal{F}_t^{\mathrm{DGM}}$-measurable. The hidden state may be used by the algorithm to compute admissible distinctions, proposal scores, and restricted routing functions, but it is not treated as arbitrary freely conditionable information in the unrestricted Bayes-risk theory. If full $h$ is admitted into $\mathcal{B}$, then all edge predicates and anchor-order events are already $\mathcal{B}$-measurable and the partition-level refinement gap collapses to zero. In the hard one-hot special case, where each memory returns an atomwise constant action and no extra base features are used, this reduces to strict partition measurability; $h$-dependent soft memories should be read as restricted-class or approximation statements.

Repair is the sufficient-statistic update. For every selected concept $j \in N(h)$,

$$n_{j,y}^{+} = n_{j,y} + \alpha_j(h), \qquad n_j^{+} = n_j + \alpha_j(h),$$

with all unselected counts unchanged. The low-cost hard-update variant is recovered by setting $\alpha_{j^\star} = 1$ for the highest-weight concept and $\alpha_j = 0$ for all $j \neq j^\star$. Embedding-mean memories and ridge or projection-style local repair are useful implementation variants, but they should be evaluated with calibration metrics before being used for log-loss claims.

### 8.7 From DGM to DGM-Embedding

The generic DGM object above can be attached to many local memories. For sequence models, Appendix E gives DGM-Embedding as an architectural extension with a read-before-observe protocol and forward-only detached writes.

## 9 Guarantees

The guarantees are deliberately scoped. They do not assert global optimality of DGM, nor do they assert that a deep backbone can always discover the right representation. They formalize the paper's decision rule: repair-only learners are limited by the Bayes risk of their current partition; useful refinements change the Bayes action; statistically guarded refinement accepts only distinctions whose held-out consequence value clears complexity and concentration margins; and DGM implements this operation as a dynamic graph data structure. Full proof details are in Appendices I, J, and K.

**1. Error decomposes into two gaps.** Theorem 4.2 states that for current predictor $f_t$, current partition $\Pi_t$, and candidate refined partition $\Pi^\star$,

$$R_L(f_t) - R_L(\Pi^\star) = \Delta_{\mathrm{repair}}(f_t, \Pi_t) + \Delta_{\mathrm{refine}}(\Pi_t, \Pi^\star).$$

The first term is the best possible gain from repairing the predictor at fixed information. The second is the value of changing the information structure.

**2. Repair-only learners have linear regret.** Theorem 4.3 states that any learner whose predictions remain measurable with respect to a fixed partition $\Pi$ has expected regret at least

$$T\left(R_L(\Pi) - R_L(\Pi^\star)\right)$$

against a refined oracle $\Pi^\star$. Thus a positive refinement gap is not just a pointwise contradiction; it is a sequential lower bound. Corollary 4.4 clarifies the relationship to backpropagation: gradient updates are repair-only only when they update parameters downstream of a fixed information map. Full backpropagation through the representation can change the information structure and is not covered by this lower bound.

**3. Useful refinements change the Bayes action.** Theorem 6.3 states that, under uniqueness of the refined Bayes action, a refinement has zero value exactly when the refined action is already measurable under the old information, in the classical decision-theoretic sense of information value [Bla53, Ber85]. For finite $Y$ under log loss, Theorem 6.4 sharpens this to

$$R_{\log}(\mathcal{F}) - R_{\log}(\mathcal{G}) = \mathbb{E}\, D_{\mathrm{KL}}(\mathbb{P}(Y \in \cdot \mid \mathcal{G}) \| \mathbb{P}(Y \in \cdot \mid \mathcal{F}))\,.$$

Thus stochastic conflict, not only hard-label contradiction, is enough to make refinement valuable.

These value identities are population statements. Hoeffding-style validation results later in the paper require bounded loss, clipped loss, or separate tail assumptions; raw language-model negative log likelihood is handled only through the clipped-score corollary unless additional concentration assumptions are supplied.

**4. Missing distinctions obstruct repair.** Corollary 4.6 says that if two states have the same information-map value but require different consequences, no predictor measurable with respect to the current information can satisfy both. This is the main theoretical point of the paper:

| if the target separates states that the information map identifies, repair is impossible. |
|---|

The result is architecture-independent; it applies to caches, adapters, local memories, and test-time optimizers whenever their update leaves the relevant information structure fixed.

**5. Refinement has a canonical minimal form.** Theorems 5.2 and 5.4 identify the least information update that makes new evidence observable. In the finite case, a binary distinction splits exactly the atoms it crosses. In the sigma-algebra case, the update is

$$\mathcal{F}_{t+1} = \mathcal{F}_t \vee \sigma(U_t).$$

Section 6 gives the standard value identities that explain when such a distinction is useful: conditional mutual information under log loss and conditional variance reduction under squared loss [CT06, GR07, Bil95, Kal02]. Theorem 6.7 further identifies the smallest refinement needed to express the refined Bayes action.

For DGM specifically, the edge skeleton realizes this minimal join operation. The exact hard route also adds anchor-order events as routing infrastructure when a new anchor is inserted, so the full Hard-DGM update is a structured refinement rather than always a single-event minimal refinement.

**6. Greedy refinement has finite-class guarantees.** Theorem 7.5 gives a realizable recovery guarantee: if the algorithm keeps selecting positive-mass impure atoms, each selected atom has a target-respecting distinction with value at least $\gamma$ that creates two positive-mass sides, and split values are estimated accurately enough, greedy refinement recovers the target partition on the positive-mass support after at most $K^+ - m_0^+ \leq K^+ - 1$ accepted splits, where $K^+$ and $m_0^+$ count positive-mass target and initial atoms. Theorem 7.6 gives a finite-class oracle inequality over partitions reachable by at most $B$ global distinctions; the atom count in that class is $m_0 2^B$, not $m_0 + B$, unless the search class is restricted to local one-atom splits.

**7. Guarded DGM updates descend locally.** Theorem 8.11 states the algorithmic guarantee. A guarded repair does not increase the scoring-buffer objective because anchors and edges remain fixed and only a non-worsening local-state candidate is committed. An accepted refinement adds one concept and its actual accepted edge set only when its held-out penalized refinement gain beats the repair gain plus a margin and statistical safety term. Thus DGM is not an unscored growth heuristic: it is a local refine-or-repair decision with an explicit gap comparison.

These statements also define the boundary of the claim. The scoring buffer is local and changes over time, so the descent result is not a global training theorem. The adaptive validation theorem requires fresh or otherwise unused held-out scoring samples; reused validation buffers need a reusable-holdout argument. The strict Bayes-risk refinement gap is a statement about the runtime information structure or a restricted hard-route prediction class; it is not a claim that adding DGM edges increases information beyond a predictor that can already condition arbitrarily on the full hidden state. Approximate retrieval must satisfy candidate recall for Soft-DGM edge gates to recover the formal Hard-DGM route, and centroid repair may change the smooth Soft-DGM read map even when the anchor-based hard information structure is fixed. Budgeting, merging, and eviction are systems approximations that may discard distinctions and must be evaluated separately.

# 10 Evaluation Design: Inference-Time Adaptation

The empirical test of DGM should be as sharp as the theory: it must expose the difference between repairing a fixed information structure and refining that structure when the current state has collapsed consequence-relevant cases. We therefore use a prequential inference-time protocol [Daw84] with a shared frozen backbone. All mandatory runs are sized for one Apple M4 Max workstation: no distributed training, no server-side retrieval service, and no offline hyperparameter search that would be unavailable to the compared methods at runtime.

## 10.1 Runtime contract

Every method receives the same frozen encoder or language model. The cost of training or loading this shared model is reported but not charged to runtime adaptation. At round $t$, the method receives $x_t$, computes the shared hidden state $h_t = \phi_\theta(x_t)$, predicts $\hat{y}_t$, then observes the consequence $y_t$ and may update only its declared runtime state:

$$x_t \longrightarrow h_t \longrightarrow \hat{y}_t, \qquad y_t \longrightarrow \text{runtime update.}$$

DGM updates by detached graph-memory repair or by guarded refinement. Test-time training baselines update a head, prompt, adapter, normalization state, or other declared adaptation parameters by inference-time gradient steps. The reported adaptation overhead excludes the shared frozen forward pass and includes all extra reads, writes, backward passes, activation storage, optimizer state, synchronization, and memory-index maintenance.

### 10.2 Questions

The suite is organized around four falsifiable questions.

1. **Structural necessity.** On streams with a positive refinement gap, does full DGM reduce prequential loss where repair-only memories, caches, online ridge, and head-only backpropagation are stuck under the same frozen information map?

2. **Non-gratuitous refinement.** On streams whose errors are repairable inside the current concepts, does DGM mostly repair rather than create unnecessary nodes and edges?

3. **Natural frozen-model adaptation.** On image and language streams with revealed labels or next tokens, does DGM improve the loss–latency–memory frontier relative to inference-time gradient adaptation and nonparametric memory baselines?

4. **Scaling on one workstation.** How far can concept count, edge count, stream length, and hidden dimension be pushed on an M4 Max before latency or unified-memory use becomes the limiting factor?

### 10.3 Benchmarks

**Controlled hidden-context streams.** The cleanest experiment makes the repair obstruction visible. A stream contains a hidden regime $z_t$ and an observed feature $x_t$ whose frozen representation collapses multiple regimes into the same current atom. Labels are generated so that $P(y \mid x, z)$ differs across hidden regimes while $P(y \mid x)$ is mixed. The refined oracle observes the regime bit or an equivalent distinction; repair baselines do not. DGM receives only the frozen hidden state and consequences, so it must discover distinction edges from repeated local contradictions. We report regret slope against the refined oracle, accepted concepts and edges, and the empirical mutual-information gain of accepted distinctions. A matched repair-only control removes the hidden conflict while preserving marginal difficulty; DGM should then repair without growing a large graph.

**Frozen vision adaptation.** The image benchmark uses a frozen encoder trained once on a disjoint pretraining split or loaded from a fixed checkpoint. The adaptation stream is predict-then-observe: labels arrive after each prediction. We use three stream orders: class-balanced random order, class-burst order, and domain/corruption-burst order. Class bursts test rapid local memory updates; domain bursts test whether refinement creates consequence-relevant concepts instead of only appending examples to a cache. The largest mandatory run uses all CIFAR-100 train examples as the adaptation stream and the official test split as held-out evaluation; CIFAR-10 is retained for fast ablations and debugging.

### 10.4 Non-oracle CIFAR-100 Image-HQS

We also instantiate a harder CIFAR-100 hierarchy-query stream that removes the oracle fine-label atom. Each round provides a frozen image embedding $z = \phi(x)$ and an independently sampled mask $s \in \{0, 1\}^{20}$. The binary consequence is

$$Y = s_{c(x)}$$

with label flip probability $\eta = 0.02$, where $c(x)$ is the CIFAR-100 coarse class. The learner observes neither the fine label nor the coarse label before or during its update; those labels are used only

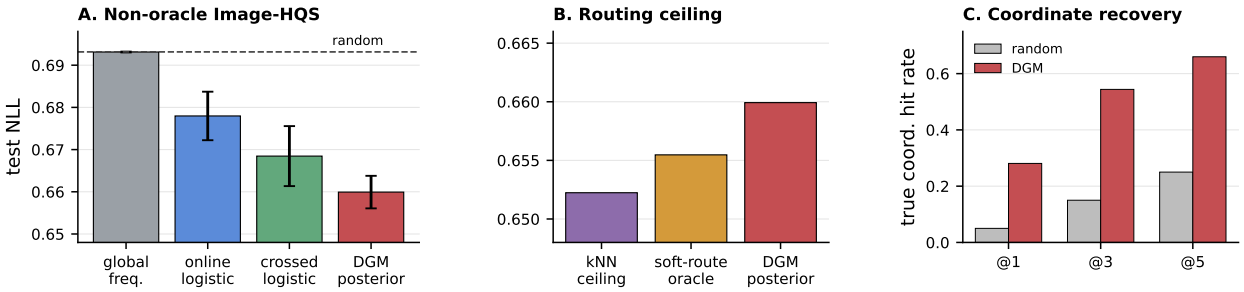


Figure 4: Non-oracle CIFAR-100 Image-HQS. Left: DGM posterior improves test NLL over frequency, online logistic, and crossed logistic baselines. Middle: the DGM posterior is close to the soft-route coarse-posterior diagnostic and within 0.008 nats of a $k$NN coarse-posterior representation ceiling. Right: the learned posterior ranks the true coarse coordinate far above random among 20 mask coordinates.

for diagnostics and oracle ceilings. All methods share the same frozen prototype encoder. Online logistic uses $[z, s]$, and crossed logistic uses $[z, s, z \otimes s]$.

In this non-oracle setting the image concepts learned online are not coarse-pure, so a single local split bit is the wrong local action. We therefore use image-only DGM routing with a mask-coordinate posterior memory at each concept:

$$P(Y = 1 \mid j, s) \approx \eta + (1 - 2\eta) \sum_{c=1}^{20} \pi_{j,c} s_c.$$

The posterior memory is updated only from the current hidden state, the query mask, and the revealed binary consequence.

Paired bootstrap intervals support the NLL gaps. DGM improves test NLL over online logistic by 0.0180 nats with 95% bootstrap CI $[0.0148, 0.0212]$, and over crossed logistic by 0.0085 nats with CI $[0.0047, 0.0122]$. Diagnostics separate this result from the oracle-partition hierarchy recovery experiment: the soft-route coarse-posterior diagnostic is 0.6555, the $k$NN coarse-posterior ceiling is 0.6522, and the posterior hit rates for the true mask coordinate are 0.2808/0.5440/0.6599 at ranks 1/3/5 versus random 0.05/0.15/0.25. Thus this result supports local posterior repair under learned visual concepts, not exact recovery of the CIFAR hierarchy graph from images.

**Frozen language-model adaptation.** For language modeling, the consequence is the next observed token. The model predicts token $x_{t+1}$ from prefix $x_{\leq t}$, then uses the revealed token to repair or refine DGM-Embedding. The main stream uses long contiguous documents so that local entities, notation, formatting, and topic shifts create repeated contexts. Free generations are not used as observations. To make the M4 Max run large enough without conflating model forward cost with memory cost, the largest run may cache frozen hidden states in fp16 and replay the prequential adaptation layer over 5M–50M tokens. A smaller end-to-end run recomputes the frozen model forward pass to verify that the cached-hidden protocol matches online execution.

### 10.5 Baselines and ablations

The core baselines are deliberately close competitors rather than weak offline training comparisons:

- **Frozen predictor:** no runtime adaptation.
- **Repair-only memories:** calibrated class/token counts, online ridge/RLS, passive-aggressive updates, and CPM-style projection memory under the same frozen features.
- **Cache and $k$NN memories:** budgeted example stores with the same key dimension, retrieval budget, and memory cap as DGM.
- **Online tree baselines:** Hoeffding-style or Mondrian-style online partitions on the frozen hidden states, where applicable.
- **Inference-time gradient baselines:** one-step and multi-step updates to a linear head, soft prompt, adapter, LoRA block, or normalization state, with optimizer state and activation memory counted.
- **Full DGM:** guarded repair, candidate-recall retrieval, consequence-sensitive refinement, and edge-gated routing.

The mandatory DGM ablations are repair-only DGM, refine-only DGM, edge-free DGM, no anchor-recall candidates, no graph-neighbor candidates, unguarded refinement, and fixed trust weight versus online-selected trust weight. These ablations identify whether gains come from refinement, edge gating, better candidate recall, or merely extra memory capacity.

### 10.6 Metrics and reporting

Each run reports prequential loss, prequential accuracy when applicable, held-out post-adaptation loss, and regret to the known oracle on controlled streams. Systems measurements are separated into shared forward time, adaptation read time, adaptation write time, backward time, synchronization time, peak unified-memory use, optimizer-state memory, activation memory, concept memory, and index memory. We also report number of backward passes, trainable adaptation parameters, accepted concepts, accepted edges, average degree, refinement acceptance rate, candidate-recall rate for controlled streams, calibration error for probabilistic outputs, and the validation gain of accepted versus rejected refinements.

### 10.7 Decision rule for claiming evidence

The experiment supports the DGM claim only if three outcomes hold together. First, on hidden-context streams, full DGM must reduce the repair-only regret slope and move toward the refined oracle with a graph whose accepted distinctions have positive held-out value. Second, on repair-only controls, DGM must avoid unnecessary growth and remain competitive with the best fixed-information repair method. Third, on natural frozen-model streams, DGM must improve the prequential loss–latency–memory frontier against cache and inference-time gradient baselines. If DGM only wins by using more memory, by seeing labels before prediction, or by hiding backbone/gradient cost, the experiment does not validate the theory.

## 11 Related Work

The relevant comparison is not whether DGM uses centers, memory, routing, or online updates. All of these ingredients have long histories. The comparison is whether a runtime learner separates two operations that are often collapsed: repairing state inside the current representation and refining the representation when consequences reveal a missing distinction.

**Repair without refinement.** Cache language models and $k$NN-LMs store or retrieve context-token examples at inference time [GCJ17, KLJ+20]. Memorizing Transformers, RETRO, RAG, and sparse read/write memories scale this idea with larger or external stores [WRHS22, BMH+22, LPP+20, RHH+16]. Fast weights, linear attention memories, passive-aggressive updates, online ridge/RLS, and projection-style memories repair associative state inside a fixed geometry [BHM+16, KVPF20, SIS21, CDK+06, Vov97, Bre67, TA77, HK70]. Adapters and LoRA expose parameter-efficient state that can be updated when used online [HGJ+19, HSW+22]. Test-time adaptation and test-time training update model state or parameters by optimizing an inference-time surrogate [SWL+20, WSL+21, NWZ+22, ZLF22, SLD+25]. These methods address the $\Delta_{\text{repair}}$ side of runtime learning; DGM asks the prior structural question of whether the error is repairable under the current distinctions.

**Refinement without local repair.** Decision trees, online trees, Hoeffding trees, adaptive trees, and Mondrian forests refine leaves using information gain, variance reduction, or streaming split tests [Qui86, BFOS84, DH00, BG09, MWS18, LRT14]. Adaptive Resonance Theory and prototype methods create or move categories under mismatch [CG87b, CG87a, Gro13, Koh90, Fri95, SSZ17]. DGM shares the refinement motivation, but stores distinctions as local graph edges between runtime concepts and attaches repairable memories to the concepts after they are created.

**Routing without runtime concept creation.** Mixture-of-experts, Switch Transformers, and Product-Key Memory route queries to sparse trained capacity [SMM+17, FZS22, LSR+19]. Memory Networks, Neural Turing Machines, and Differentiable Neural Computers learn external memory controllers [WCB15, SWF+15, GWD14, GWR+16]. DGM differs in write semantics: the routed objects are runtime-created concepts whose edges generate an information structure and whose memories are repaired locally.

Appendix C gives the extended related-work discussion. The short version is that DGM combines refinement and repair while keeping their roles separate:

$$\Delta_{\text{refine}} \text{ dominates} \Rightarrow \text{refine}, \qquad \Delta_{\text{repair}} \text{ dominates} \Rightarrow \text{repair}.$$

## 12 Conclusion

This paper separates two operations that are often conflated in runtime learning. A repair update improves predictions inside the current information structure. A refinement update changes the information structure itself. The repair-only lower bound shows that, whenever the current quotient collapses cases separated by the target, repair alone incurs linear regret against a refined oracle. The value identities show that useful distinctions are consequence-sensitive: under log loss, their value is conditional mutual information.

DGM realizes these ideas as a graph-memory data structure whose nodes repair local memories and whose edges generate accepted distinctions. The theory does not claim that DGM is a universal replacement for gradient learning. It identifies when fixed-information updates are structurally insufficient and gives one algorithmic mechanism for adding the missing distinctions.

The remaining empirical burden is substantial. The frequency-controlled CIFAR-100 hierarchy query stream shows that the learned graph can recover a real semantic hierarchy in an oracle-partition diagnostic, and the non-oracle CIFAR-100 Image-HQS stream shows that image-routed posterior memory can improve test log loss over online linear and crossed-interaction baselines under a shared frozen encoder. The calibrated trust aggregation gives a cumulative log-loss fallback to

the frozen predictor. Stronger nonparametric baselines, memory-latency budgets, larger frozen-embedding streams, and large-scale language-model adaptation remain future work before making broad deployment claims.

| Method | Information operation | Per-round adaptation / read overhead | Runtime state memory |
|---|---|---|---|
| Full backprop + Adam | May change information map if encoder/routing parameters move | Backward/update through $P_{\mathrm{tr}}$ parameters; activation storage for the adaptation window | Weights, gradients, and Adam moments: $O(P_{\mathrm{tr}})$ each, plus $O(A_{\mathrm{bp}})$ activations |
| Head-only or linear-probe backprop | Fixed-information repair when features $h = I(\omega)$ are frozen | Backward/update through head parameters $P_{\mathrm{head}}$ | $O(P_{\mathrm{head}})$ weights plus optimizer state and head activations |
| Adapters / LoRA online | Repair if downstream of fixed $I$; otherwise may change the information map | Backward/update through adapter parameters $P_{\mathrm{ad}}$ in selected layers | $O(P_{\mathrm{ad}})$ weights plus optimizer state and selected-layer activations |
| Cache or budgeted $k$NN | Stores examples under a fixed representation; no explicit refinement test | Retrieval $C_{\mathrm{ret}}(M, d)$ plus aggregation over $k$ neighbors | $O(M(d + \bar{s}))$ keys and values, plus index overhead |
| Online tree / Hoeffding tree | Refines a rooted leaf partition | Query $O(D_{\mathrm{tree}})$; update split statistics on visited leaf | $O(\#\mathrm{leaves} \cdot S_{\mathrm{leaf}})$ |
| DGM, exact Hard-DGM | Refines graph-generated partition by adding binary generators | Query $O(N_t d + Q(h)d + kd + C_{\mathrm{mem}})$ with exact retrieval; accepted refinement adds $O(d + qd)$ | $O(N_t(2d + \bar{s}) + \lvert E_t \rvert\, d)$ |
| DGM, sparse Soft-DGM | Approximate Hard-DGM under candidate recall and margins | Query $O(C_{\mathrm{ret}}(N_t, d) + Q(h)d + kd + C_{\mathrm{mem}})$; accepted refinement adds $O(d + qd)$ | $O(N_t(2d + \bar{s}) + \lvert E_t \rvert\, d)$ plus index overhead |

Table 2: Runtime-adaptation cost comparison. DGM does not claim to dominate unconstrained full backpropagation statistically. The theoretical separation applies to fixed-information repair methods: when the representation quotient is fixed and has positive refinement gap, they incur the lower bound in Theorem 4.3, while DGM can pay local graph-memory cost to add a distinction. Full backpropagation through the representation can also change the quotient, but pays backward-pass, activation, and optimizer-state costs.

| Benchmark | What it tests | M4 Max scale target | Primary success condition |
|---|---|---|---|
| Hidden-context control | The frozen state intentionally collapses regimes that require different predictions. The oracle refined partition is known. | $10^6$–$10^7$ stream rounds, $K \in \{8, 32, 128\}$ regimes, label noise grid, 5 seeds. | DGM approaches the refined oracle and beats repair-only regret slope. |
| Repair-only control | Same stream geometry but no hidden consequence conflict. Errors come from stale local statistics. | Matched stream length and concept budget. | DGM accepts few refinements and matches the best repair baseline. |
| Frozen vision streams | CIFAR-10/100-style frozen-encoder classification [Kri09] with class/domain bursts, corruptions, and replay-free label reveal. | Full CIFAR-10 and CIFAR-100 streams; optional resized ImageNet-100 or local image subset if available. | Better prequential NLL or accuracy at matched adaptation time and memory. |
| Frozen LM streams | A frozen next-token model processes document continuations; the observed next token is the consequence. | 5M–50M tokens with cached fp16 hidden states; char/word small model for smoke, GPT-style frozen model for max run. | Lower prequential NLL than cache and gradient-update adapters at lower backward cost. |
| Systems scaling | Synthetic hidden states plus labels isolate data-structure cost from model forward cost. | $N = 10^3$–$10^6$ concepts, $d = 128$–$2048$, top-$k = 8$–$64$, edge degree $q = 0$–$32$. | Report latency, memory, candidate recall, and refinement throughput. |

Table 3: Evaluation suite. The controlled streams test the theorem-level separation; the image and language streams test practical frozen-backbone adaptation; the systems benchmark establishes the largest single-workstation operating envelope.

| Method | Test NLL ↓ | Test accuracy ↑ |
|---|---|---|
| Global frequency | $0.6931 \pm 0.0001$ | $0.5034 \pm 0.0103$ |
| Online logistic | $0.6780 \pm 0.0057$ | $0.5743 \pm 0.0090$ |
| Crossed logistic | $0.6685 \pm 0.0071$ | $0.5924 \pm 0.0143$ |
| DGM posterior | $\mathbf{0.6599 \pm 0.0039}$ | $\mathbf{0.6018 \pm 0.0096}$ |

Table 4: Non-oracle CIFAR-100 Image-HQS over 10 seeds. DGM posterior uses image-only routing and local mask-coordinate posterior repair; no fine or coarse label is exposed to the predictor or update rule.

## References


[Ber85] James O. Berger. *Statistical Decision Theory and Bayesian Analysis*. Springer, 2 edition, 1985.

[BFOS84] Leo Breiman, Jerome H. Friedman, Richard A. Olshen, and Charles J. Stone. *Classification and Regression Trees*. Wadsworth, 1984.

[BG09] Albert Bifet and Ricard Gavaldà. Adaptive learning from evolving data streams. In *Advances in Intelligent Data Analysis VIII*, volume 5772 of *Lecture Notes in Computer Science*, pages 249–260. Springer, 2009.

[BHM+16] Jimmy Ba, Geoffrey E. Hinton, Volodymyr Mnih, Joel Z. Leibo, and Catalin Ionescu. Using fast weights to attend to the recent past. In *Advances in Neural Information Processing Systems*, volume 29, 2016.

[Bil95] Patrick Billingsley. *Probability and Measure*. Wiley, 3 edition, 1995.

[Bla53] David Blackwell. Equivalent comparisons of experiments. *The Annals of Mathematical Statistics*, 24(2):265–272, 1953.

[BMH+22] Sebastian Borgeaud, Arthur Mensch, Jordan Hoffmann, Trevor Cai, Eliza Rutherford, Katie Millican, George B. van den Driessche, Jean-Baptiste Lespiau, Bogdan Damoc, Aidan Clark, Diego de Las Casas, Aurelia Guy, Jacob Menick, Roman Ring, Tom Hennigan, Saffron Huang, Loren Maggiore, Chris Jones, Albin Cassirer, Andy Brock, Michela Paganini, Geoffrey Irving, Oriol Vinyals, Simon Osindero, Karen Simonyan, Jack Rae, Erich Elsen, and Laurent Sifre. Improving language models by retrieving from trillions of tokens. In *Proceedings of the 39th International Conference on Machine Learning*, volume 162 of *Proceedings of Machine Learning Research*, pages 2206–2240, 2022.

[Bre67] Lev M. Bregman. The relaxation method of finding the common point of convex sets and its application to the solution of problems in convex programming. *USSR Computational Mathematics and Mathematical Physics*, 7(3):200–217, 1967.

[Bri50] Glenn W. Brier. Verification of forecasts expressed in terms of probability. *Monthly Weather Review*, 78(1):1–3, 1950.

[CBL06] Nicolò Cesa-Bianchi and Gábor Lugosi. *Prediction, Learning, and Games*. Cambridge University Press, 2006.

[CDK+06] Koby Crammer, Ofer Dekel, Joseph Keshet, Shai Shalev-Shwartz, and Yoram Singer. Online passive-aggressive algorithms. *Journal of Machine Learning Research*, 7:551–585, 2006.

[CG87a] Gail A. Carpenter and Stephen Grossberg. ART 2: Self-organization of stable category recognition codes for analog input patterns. *Applied Optics*, 26(23):4919–4930, 1987.

[CG87b] Gail A. Carpenter and Stephen Grossberg. A massively parallel architecture for a self-organizing neural pattern recognition machine. *Computer Vision, Graphics, and Image Processing*, 37(1):54–115, 1987.

[CT06] Thomas M. Cover and Joy A. Thomas. *Elements of Information Theory*. Wiley, 2 edition, 2006.

[Daw84] A. P. Dawid. Statistical theory: The prequential approach. *Journal of the Royal Statistical Society. Series A (General)*, 147(2):278–292, 1984.

[DFH+15a] Cynthia Dwork, Vitaly Feldman, Moritz Hardt, Toniann Pitassi, Omer Reingold, and Aaron Roth. Generalization in adaptive data analysis and holdout reuse. In *Advances in Neural Information Processing Systems*, volume 28, pages 2350–2358, 2015.

[DFH+15b] Cynthia Dwork, Vitaly Feldman, Moritz Hardt, Toniann Pitassi, Omer Reingold, and Aaron Roth. The reusable holdout: Preserving validity in adaptive data analysis. *Science*, 349(6248):636–638, 2015.

[DGL96] Luc Devroye, László Györfi, and Gábor Lugosi. *A Probabilistic Theory of Pattern Recognition*. Springer, 1996.

[DH00] Pedro Domingos and Geoff Hulten. Mining high-speed data streams. In *Proceedings of the Sixth ACM SIGKDD International Conference on Knowledge Discovery and Data Mining*, pages 71–80, 2000.

[Fri95] Bernd Fritzke. A growing neural gas network learns topologies. In *Advances in Neural Information Processing Systems*, volume 7, pages 625–632, 1995.

[FS97] Yoav Freund and Robert E. Schapire. A decision-theoretic generalization of on-line learning and an application to boosting. *Journal of Computer and System Sciences*, 55(1):119–139, 1997.

[FZS22] William Fedus, Barret Zoph, and Noam Shazeer. Switch transformers: Scaling to trillion parameter models with simple and efficient sparsity. *Journal of Machine Learning Research*, 23(120):1–39, 2022.

[GCJ17] Edouard Grave, Moustapha M. Cisse, and Armand Joulin. Improving neural language models with a continuous cache. In *International Conference on Learning Representations*, 2017.

[GPSW17] Chuan Guo, Geoff Pleiss, Yu Sun, and Kilian Q. Weinberger. On calibration of modern neural networks. In *Proceedings of the 34th International Conference on Machine Learning*, volume 70 of *Proceedings of Machine Learning Research*, pages 1321–1330, 2017.

[GR07] Tilmann Gneiting and Adrian E. Raftery. Strictly proper scoring rules, prediction, and estimation. *Journal of the American Statistical Association*, 102(477):359–378, 2007.

[Gro13] Stephen Grossberg. Adaptive resonance theory: How a brain learns to consciously attend, learn, and recognize a changing world. *Neural Networks*, 37:1–47, 2013.

[GW99] Bernhard Ganter and Rudolf Wille. *Formal Concept Analysis: Mathematical Foundations*. Springer, 1999.

[GWD14] Alex Graves, Greg Wayne, and Ivo Danihelka. Neural turing machines, 2014.

[GWR+16] Alex Graves, Greg Wayne, Malcolm Reynolds, Tim Harley, Ivo Danihelka, Agnieszka Grabska-Barwińska, Sergio Gómez Colmenarejo, Edward Grefenstette, Tiago Ramalho, John Agapiou, Adrià Puigdomènech Badia, Karl Moritz Hermann, Yori Zwols, Georg Ostrovski, Adam Cain, Helen King, Christopher Summerfield, Phil Blunsom, Koray Kavukcuoglu, and Demis Hassabis. Hybrid computing using a neural network with dynamic external memory. *Nature*, 538(7626):471–476, 2016.

[HGJ+19] Neil Houlsby, Andrei Giurgiu, Stanislaw Jastrzebski, Bruna Morrone, Quentin de Laroussilhe, Andrea Gesmundo, Mona Attariyan, and Sylvain Gelly. Parameter-efficient transfer learning for NLP. In *Proceedings of the 36th International Conference on Machine Learning*, volume 97 of *Proceedings of Machine Learning Research*, pages 2790–2799, 2019.

[HK70] Arthur E. Hoerl and Robert W. Kennard. Ridge regression: Biased estimation for nonorthogonal problems. *Technometrics*, 12(1):55–67, 1970.

[Hoe63] Wassily Hoeffding. Probability inequalities for sums of bounded random variables. *Journal of the American Statistical Association*, 58(301):13–30, 1963.

[HSW+22] Edward J. Hu, Yelong Shen, Phillip Wallis, Zeyuan Allen-Zhu, Yuanzhi Li, Shean Wang, Lu Wang, and Weizhu Chen. LoRA: Low-rank adaptation of large language models. In *International Conference on Learning Representations*, 2022.

[IM98] Piotr Indyk and Rajeev Motwani. Approximate nearest neighbors: Towards removing the curse of dimensionality. In *Proceedings of the Thirtieth Annual ACM Symposium on Theory of Computing*, pages 604–613, 1998.

[JDJ19] Jeff Johnson, Matthijs Douze, and Hervé Jégou. Billion-scale similarity search with GPUs. *IEEE Transactions on Big Data*, 7(3):535–547, 2019.

[Kal02] Olav Kallenberg. *Foundations of Modern Probability*. Springer, 2 edition, 2002.

[KB15] Diederik P. Kingma and Jimmy Ba. Adam: A method for stochastic optimization. In *International Conference on Learning Representations*, 2015.

[KLJ+20] Urvashi Khandelwal, Omer Levy, Dan Jurafsky, Luke Zettlemoyer, and Mike Lewis. Generalization through memorization: Nearest neighbor language models. In *International Conference on Learning Representations*, 2020.

[KNT+20] Pang Wei Koh, Thao Nguyen, Yew Siang Tang, Stephen Mussmann, Emma Pierson, Been Kim, and Percy Liang. Concept bottleneck models. In *Proceedings of the 37th International Conference on Machine Learning*, volume 119 of *Proceedings of Machine Learning Research*, pages 5338–5348, 2020.

[Koh90] Teuvo Kohonen. The self-organizing map. *Proceedings of the IEEE*, 78(9):1464–1480, 1990.

[Koh95] Teuvo Kohonen. *Self-Organizing Maps*, volume 30 of *Springer Series in Information Sciences*. Springer, 1995.

[KPR+17] James Kirkpatrick, Razvan Pascanu, Neil Rabinowitz, Joel Veness, Guillaume Desjardins, Andrei A. Rusu, Kieran Milan, John Quan, Tiago Ramalho, Agnieszka

Grabska-Barwinska, Demis Hassabis, Claudia Clopath, Dharshan Kumaran, and Raia Hadsell. Overcoming catastrophic forgetting in neural networks. *Proceedings of the National Academy of Sciences*, 114(13):3521–3526, 2017.

[Kri09] Alex Krizhevsky. Learning multiple layers of features from tiny images. Technical report, University of Toronto, 2009.

[KVPF20] Angelos Katharopoulos, Apoorv Vyas, Nikolaos Pappas, and François Fleuret. Transformers are RNNs: Fast autoregressive transformers with linear attention. In *Proceedings of the 37th International Conference on Machine Learning*, volume 119 of *Proceedings of Machine Learning Research*, pages 5156–5165, 2020.

[LBBH98] Yann LeCun, Léon Bottou, Yoshua Bengio, and Patrick Haffner. Gradient-based learning applied to document recognition. *Proceedings of the IEEE*, 86(11):2278–2324, 1998.

[LPP+20] Patrick Lewis, Ethan Perez, Aleksandra Piktus, Fabio Petroni, Vladimir Karpukhin, Naman Goyal, Heinrich Küttler, Mike Lewis, Wen-tau Yih, Tim Rocktäschel, Sebastian Riedel, and Douwe Kiela. Retrieval-augmented generation for knowledge-intensive NLP tasks. In *Advances in Neural Information Processing Systems*, volume 33, pages 9459–9474, 2020.

[LPR17] David Lopez-Paz and Marc'Aurelio Ranzato. Gradient episodic memory for continual learning. In *Advances in Neural Information Processing Systems*, volume 30, 2017.

[LRT14] Balaji Lakshminarayanan, Daniel M. Roy, and Yee Whye Teh. Mondrian forests: Efficient online random forests. In *Advances in Neural Information Processing Systems*, volume 27, 2014.

[LSR+19] Guillaume Lample, Alexandre Sablayrolles, Marc'Aurelio Ranzato, Ludovic Denoyer, and Herve Jegou. Large memory layers with product keys. In *Advances in Neural Information Processing Systems*, volume 32, 2019.

[MS91] Thomas M. Martinetz and Klaus J. Schulten. A neural-gas network learns topologies. In *Artificial Neural Networks*, pages 397–402, 1991.

[MWS18] Chaitanya Manapragada, Geoffrey I. Webb, and Mahsa Salehi. Extremely fast decision tree. In *Proceedings of the 24th ACM SIGKDD International Conference on Knowledge Discovery and Data Mining*, pages 1953–1962, 2018.

[NWZ+22] Shuaicheng Niu, Jiaxiang Wu, Yifan Zhang, Yaofo Chen, Shihua Zheng, Peilin Zhao, and Mingkui Tan. Efficient test-time model adaptation without forgetting. In *Proceedings of the 39th International Conference on Machine Learning*, volume 162 of *Proceedings of Machine Learning Research*, pages 16888–16905, 2022.

[Pen55] Roger Penrose. A generalized inverse for matrices. *Mathematical Proceedings of the Cambridge Philosophical Society*, 51(3):406–413, 1955.

[Qui86] J. R. Quinlan. Induction of decision trees. *Machine Learning*, 1(1):81–106, 1986.

[RHH+16] Jack W. Rae, Jonathan J. Hunt, Tim Harley, Ivo Danihelka, Andrew Senior, Greg Wayne, Alex Graves, and Timothy Lillicrap. Scaling memory-augmented neural networks with sparse reads and writes. In *Advances in Neural Information Processing Systems*, volume 29, 2016.

[RHW86] David E. Rumelhart, Geoffrey E. Hinton, and Ronald J. Williams. Learning representations by back-propagating errors. *Nature*, 323(6088):533–536, 1986.

[RRD+16] Andrei A. Rusu, Neil C. Rabinowitz, Guillaume Desjardins, Hubert Soyer, James Kirkpatrick, Koray Kavukcuoglu, Razvan Pascanu, and Raia Hadsell. Progressive neural networks, 2016.

[SIS21] Imanol Schlag, Kazuki Irie, and Jürgen Schmidhuber. Linear transformers are secretly fast weight programmers. In *Proceedings of the 38th International Conference on Machine Learning*, volume 139 of *Proceedings of Machine Learning Research*, pages 9355–9366, 2021.

[SLD+25] Yu Sun, Xinhao Li, Karan Dalal, Jiarui Xu, Arjun Vikram, Genghan Zhang, Yann Dubois, Xinlei Chen, Xiaolong Wang, Sanmi Koyejo, Tatsunori Hashimoto, and Carlos Guestrin. Learning to (learn at test time): RNNs with expressive hidden states. In *Proceedings of the 42nd International Conference on Machine Learning*, volume 267 of *Proceedings of Machine Learning Research*, pages 57503–57522, 2025.

[SMM+17] Noam Shazeer, Azalia Mirhoseini, Krzysztof Maziarz, Andy Davis, Quoc Le, Geoffrey Hinton, and Jeff Dean. Outrageously large neural networks: The sparsely-gated mixture-of-experts layer. In *International Conference on Learning Representations*, 2017.

[SS12] Shai Shalev-Shwartz. Online learning and online convex optimization. *Foundations and Trends in Machine Learning*, 4(2):107–194, 2012.

[SSZ17] Jake Snell, Kevin Swersky, and Richard S. Zemel. Prototypical networks for few-shot learning. In *Advances in Neural Information Processing Systems*, volume 30, 2017.

[SWF+15] Sainbayar Sukhbaatar, Jason Weston, Rob Fergus, et al. End-to-end memory networks. In *Advances in Neural Information Processing Systems*, volume 28, 2015.

[SWL+20] Yu Sun, Xiaolong Wang, Zhuang Liu, John Miller, Alexei A. Efros, and Moritz Hardt. Test-time training with self-supervision for generalization under distribution shifts. In *Proceedings of the 37th International Conference on Machine Learning*, volume 119 of *Proceedings of Machine Learning Research*, pages 9229–9248, 2020.

[TA77] Andrey N. Tikhonov and Vasiliy Y. Arsenin. *Solutions of Ill-Posed Problems*. Winston, 1977.

[Vov90] Vladimir G. Vovk. Aggregating strategies. In *Proceedings of the Third Annual Workshop on Computational Learning Theory*, pages 371–383. Morgan Kaufmann, 1990.

[Vov97] Volodya Vovk. Competitive on-line linear regression. In *Advances in Neural Information Processing Systems*, volume 10, 1997.

[VSP+17] Ashish Vaswani, Noam Shazeer, Niki Parmar, Jakob Uszkoreit, Llion Jones, Aidan N. Gomez, Łukasz Kaiser, and Illia Polosukhin. Attention is all you need. In *Advances in Neural Information Processing Systems*, volume 30, 2017.

[WCB15] Jason Weston, Sumit Chopra, and Antoine Bordes. Memory networks. In *International Conference on Learning Representations*, 2015.

[WRHS22] Yuhuai Wu, Markus N. Rabe, DeLesley Hutchins, and Christian Szegedy. Memorizing transformers. In *International Conference on Learning Representations*, 2022.

[WSL+21] Dequan Wang, Evan Shelhamer, Shaoteng Liu, Bruno Olshausen, and Trevor Darrell. Tent: Fully test-time adaptation by entropy minimization. In *International Conference on Learning Representations*, 2021.

[YYLH18] Jaehong Yoon, Eunho Yang, Jeongtae Lee, and Sung Ju Hwang. Lifelong learning with dynamically expandable networks. In *International Conference on Learning Representations*, 2018.

[Zin03] Martin Zinkevich. Online convex programming and generalized infinitesimal gradient ascent. In *Proceedings of the 20th International Conference on Machine Learning*, pages 928–936, 2003.

[ZLF22] Marvin Zhang, Sergey Levine, and Chelsea Finn. MEMO: Test time robustness via adaptation and augmentation. In *Advances in Neural Information Processing Systems*, volume 35, pages 38629–38642, 2022.

# Appendix

## A Appendix Roadmap

The appendix keeps secondary material out of the main method story. It first states limitations, then gives extended related work, the DGM-Embedding architectural extension, implementation extensions, additional computational checks, proof sketches, the projection-memory bridge, and formal proofs.

- **Part 1.** Appendix B clarifies what the theory proves and what it leaves to modeling, statistics, and experiments.
- **Part 2.** Appendix C gives the extended related-work discussion.
- **Part 3.** Appendix E gives DGM-Embedding as an architectural extension; Appendix F collects tree special cases, data-structure costs, the optional adapter variant, systems notes, and closed-form local repair.
- **Part 4.** Appendix D reports secondary computational checks.
- **Part 5.** Appendix G gives proof sketches, and Appendix H gives the Projection Memory and CPM bridge.
- **Part 6.** Appendices I, J, and K give the formal proofs.

## B Limitations

The theory identifies when a distinction is necessary or valuable at the population-information level. It does not solve the search problem of finding the best distinction in a rich hypothesis class. The online algorithm is greedy and local: its refinement rule concerns local concepts and their nearby conflicts, not global optimality over all information structures.

The risk identities assume correctly estimated conditional distributions or conditional means. With finite data, refinement can increase estimation error, so useful population distinctions may be statistically unsafe. Complexity penalties, thresholds, validation, Bayesian priors, or minimum leaf sizes are needed in practical systems.

The finite-sample validation theorem assumes a genuinely held-out scoring buffer: fresh samples, or samples not previously used to choose proposals or update the state. Reusing the same validation buffer after previous accept/reject decisions makes the candidate class adaptive to that buffer and requires reusable-holdout or other adaptive-validation machinery beyond the Hoeffding argument stated here.

The base-information convention is restricted. If the full hidden state is made freely conditionable in the Bayes-risk benchmark, then all DGM edge predicates and anchor-order events are already measurable and the sigma-algebra refinement gap vanishes. The strict partition theory therefore applies to the current runtime information or to restricted hard-route prediction classes; h-dependent soft memories are implementation approximations or restricted-class extensions.

The DGM method specifies one canonical refinement mechanism, based on concepts and local distinction edges, but this is not claimed to be optimal. Rich domains may require learned concept-creation rules, approximate nearest-neighbor indices, nonlinear distinction edges, and better merge or forgetting policies than the default budget notes in Appendix F. The bridge to Projection Memory

and CPM is exact for one-hot finite partition memories. Continuous neural representations need additional modeling choices: when a continuous conflict should create a new concept, how local projection memories should be inherited, and how refined information structures interact with differentiable backbones.

Soft sparse retrieval introduces an additional recall condition. Edge gates can reject incompatible candidates, but they cannot select a hard-compatible concept that was never retrieved. Moving centroids also changes the smooth Soft-DGM read map, so the exact partition-level repair claim belongs to the anchor-based hard route, not to arbitrary centroid-smoothed predictors. The union candidate set in Section 8 reduces recall risk, but approximate retrieval remains an engineering assumption that should be measured in large systems.

The large-model layer is an architectural path rather than a completed scaling theorem. It gives a trainable read path, a detached write path, and a default budget policy with explicit complexity, but it does not prove optimization guarantees for deep nonconvex backbones, nor does it solve distributed systems issues such as load balancing or stale concept shards. Budget maintenance is also outside the formal refinement theorem: merge, eviction, and compression may discard distinctions, so their effect must be evaluated as a resource-management approximation.

The experiments are computational checks, not a full benchmark suite. The non-oracle CIFAR-100 Image-HQS result gives one realistic frozen-embedding adaptation stream, but it should not be read as evidence that DGM recovers the CIFAR hierarchy graph from raw images or solves general visual online learning. A complete empirical evaluation should include stronger tuned online and nonparametric baselines, larger representation-probe ceilings, ablations of repair-only, refine-only, edge-free, and edge-gated variants, and tasks where hidden context changes force new distinctions.

# C Related Work

The relevant comparison is not whether DGM uses centers, memory, routing, or online updates. All of these ingredients have long histories. The question is whether a runtime learner distinguishes two operations that are often collapsed: repairing state inside the current representation and refining the representation when consequences reveal a missing distinction.

## C.1 Methods that repair without refining

Cache language models and $k$NN-LMs store or retrieve context-token examples at inference time [GCJ17, KLJ+20]. Memorizing Transformers, RETRO, RAG, and sparse retrieval systems extend this idea with larger or external stores [WRHS22, BMH+22, LPP+20, RHH+16]. These methods make past examples available, but the default response to surprise is more storage or retrieval, not the creation of a new runtime concept forced by consequence conflict.

Fast weights, linear attention memories, delta-rule updates, passive-aggressive learning, online ridge/RLS, and Projection Memory repair associative state inside a fixed geometry [BHM+16, KVPF20, SIS21, CDK+06, Vov97, Bre67, TA77, HK70]. Adapter modules and LoRA provide parameter-efficient adaptation state in large pretrained models [HGJ+19, HSW+22]. Conservative Projection Memory (CPM) is especially close to our repair side because it detects zero innovation with nonzero residual as a conflict. DGM uses this diagnosis differently: a zero-innovation conflict is evidence that the current information cell is too coarse, so projection-style repair should stop until the information structure is refined.

Test-time adaptation and test-time training update model state or parameters by optimizing an inference-time objective [SWL+20, WSL+21, NWZ+22, ZLF22, SLD+25]. These methods ask

what surrogate loss should be optimized at test time. DGM asks a prior structural question: is the error repairable under the current distinctions, or does it reveal a missing distinction?

These methods solve the repair-gap side of runtime learning. They do not, by themselves, provide an explicit consequence-forced refinement operation.

### C.2 Methods that refine without local repair

Decision trees, online trees, Hoeffding trees, adaptive trees, extremely fast decision trees, and Mondrian forests refine leaves using information gain, variance reduction, or streaming split tests [Qui86, BFOS84, DH00, BG09, MWS18, LRT14]. These are the closest algorithmic relatives of DGM's refinement test. The difference is structural: trees store distinctions in a rooted hierarchy, while DGM stores local pairwise distinction edges between runtime concepts and attaches repairable memories to the resulting nodes.

Adaptive Resonance Theory, including ART 1 for binary patterns and ART 2 for analog input patterns, addresses stable incremental category creation under mismatch and vigilance [CG87b, CG87a, Gro13]. Prototype methods, LVQ, SOMs, neural gas, growing neural gas, and Prototypical Networks represent regions or classes by stored centers or exemplars [Koh90, Koh95, MS91, Fri95, SSZ17]. DGM shares the vocabulary of category creation and prototypes, but its concepts are operational hidden-state concepts whose edges are consequence-forced binary generators. The node is not only a region; it is a place where local memory can be repaired after the distinction is accepted.

Concept Bottleneck Models and Formal Concept Analysis emphasize explicit concept structures [KNT+20, GW99]. DGM does not claim human-interpretable concepts by default. Its concepts are runtime concepts: hidden-state anchors, centroids, local memories, and pairwise distinctions created from prediction consequences.

These methods solve the refinement half in various forms. They typically do not pair refinement with graph-gated neural local memories that continue to be repaired after the split.

### C.3 Methods that route without runtime concept creation

Mixture-of-experts, Switch Transformers, and Product-Key Memory route tokens or queries to sparse trained capacity [SMM+17, FZS22, LSR+19]. Memory Networks, End-to-End Memory Networks, Neural Turing Machines, and Differentiable Neural Computers learn external read/write controllers [WCB15, SWF+15, GWD14, GWR+16]. These systems are important precedents for sparse reads and external memory. DGM differs in write semantics: the routed objects are runtime-created concepts whose edges generate an information structure and whose memories are repaired locally.

Continual learning studies forgetting, replay, regularization, and capacity growth across task sequences [KPR+17, LPR17, RRD+16, YYLH18]. DGM is complementary: it is an instance-level runtime data structure for local concept growth and memory repair, not a complete task-sequence continual learning system.

### C.4 DGM's position

DGM combines refinement and repair but keeps them distinct:

$$\Delta_{\text{refine}} \text{ dominates} \Rightarrow \text{refine}, \qquad \Delta_{\text{repair}} \text{ dominates} \Rightarrow \text{repair}.$$

The measure-theoretic formalism follows standard sigma-algebra and conditional-expectation language [Bil95, Kal02]. The Bayes-risk order is related to Blackwell comparison and statistical deci-

sion theory [Bla53, Ber85]. The log-loss and squared-loss value identities are standard information-theoretic and Hilbert-space facts [CT06, GR07]. The contribution is to place these facts inside a runtime-learning model in which some errors are repair signals and others are evidence of missing distinctions.

# D M4 Max Evaluation Grid and Diagnostics

This appendix fixes the intended scale of the empirical program in Section 10 and records implementation checks for the non-oracle CIFAR-100 Image-HQS run. The run-tier grid is a design constraint; the Image-HQS audit below summarizes the completed evidence package used in Table 4.

## D.1 Run tiers

| Tier | Purpose | Scale | Use in paper |
|---|---|---|---|
| Smoke | Catch implementation bugs and check predict-before-observe order. | $10^4$ synthetic rounds, CIFAR-10 subset, $10^5$ language tokens, one seed. | Never used as headline evidence. |
| Main | Default evidence tier for all tables. | $10^6$ controlled rounds, full CIFAR-10/100 streams, 5M–10M language tokens, 3–5 seeds. | Main paper tables and figures. |
| Max | Largest M4 Max run used for scaling claims. | $10^7$ controlled rounds or synthetic states, 50M cached-token hidden states when storage permits, up to $10^6$ concepts in systems tests. | Systems and scalability figure. |

Table 5: Experiment tiers. Smoke runs are engineering checks; main and max runs are the only tiers that should support empirical claims.

## D.2 Hardware and accounting

The hardware report must include chip, GPU-core count, unified memory, macOS version, Python version, framework version, backend, dtype, and whether hidden states are recomputed or cached. For every method, report both total wall clock and the runtime-adaptation overhead after the shared frozen forward pass. For gradient baselines, count backward passes, optimizer state, and activation storage for the adaptation window. For DGM and cache baselines, count concept or example memory, edge memory, index memory, and validation-buffer memory.

The max run should stop before swapping dominates. If the machine has 64GB unified memory, the target cap is 48GB resident memory. If it has 128GB, the target cap is 96GB. Exceeding the cap is a failed systems configuration rather than a valid larger experiment.

## D.3 Controlled-stream grid

The hidden-context control should sweep regime count, noise, and drift:

$$K \in \{8, 32, 128\}, \qquad \epsilon_{\text{label}} \in \{0, 0.05, 0.15\}, \qquad T \in \{10^6, 10^7\}.$$

The repair-only control uses the same marginal $x_t$ process and stream length but removes the hidden label conflict. Required curves are cumulative prequential regret, accepted concept count, accepted edge count, and held-out split value. A convincing DGM run has a sublinear-looking regret curve relative to the refined oracle after discovery, while repair-only baselines keep a positive asymptotic slope on the hidden-context stream and do not on the repair-only stream.

### D.4 Vision-stream grid

The main vision run uses a frozen encoder and three observation orders: random-balanced, class-burst, and corruption/domain-burst. CIFAR-10 is for fast debugging; CIFAR-100 is the main mandatory dataset. If a local larger image dataset is available, an ImageNet-100-style subset can be added as a max run, but it should not replace CIFAR-100 because reviewers must be able to reproduce the baseline tier easily.

The main table should include frozen, online head SGD/Adam, online ridge or RLS, budgeted $k$NN/cache, repair-only DGM, edge-free DGM, and full DGM. Report prequential NLL, prequential accuracy, post-adaptation test NLL and accuracy, adaptation seconds per 10k examples, peak memory, and accepted concepts/edges.

### D.5 Non-oracle Image-HQS audit and ablations

The Image-HQS implementation was audited for label leakage. The online DGM update in the prequential loop calls the memory with only the current feature vector and revealed binary consequence. For the posterior variant, the repair routine receives only the query mask, the binary label, and the soft-routing weight. The CIFAR fine and coarse labels enter only after training, inside purity, true-coordinate rank, oracle diagnostic, and representation-ceiling computations. Thus the headline non-oracle result does not update $\pi_{j,c}$ from the true coarse label.

The small ablation suite in Table 6 uses $n_{\text{train}} = 2000$, $n_{\text{dev}} = 800$, and $n_{\text{test}} = 800$. It is not the headline 10-seed result, but it checks whether the gain comes from the posterior local memory rather than from a trivial global statistic.

| Variant | Test NLL ↓ | Test accuracy ↑ |
|---|---|---|
| Categorical DGM | 0.6878 | 0.5450 |
| Single-bit image-only DGM | 0.6911 | 0.5325 |
| Global posterior memory | 0.6695 | 0.5925 |
| Image-route posterior DGM | 0.6627 | 0.5850 |
| Image-route posterior DGM, $\eta_{\text{read}} = 0$ | 0.6629 | 0.5850 |
| Image+mask-route posterior DGM | 0.6623 | 0.5913 |

Table 6: Posterior-memory ablations for non-oracle CIFAR-100 Image-HQS. The known-noise readout is not driving the result: fixing the posterior readout noise to zero changes NLL by only 0.0002 in this ablation.

The global posterior is stronger than frequency because it can learn mask coordinate biases from the binary stream, but it remains worse than local posterior DGM. The categorical and single-bit variants fail because learned image concepts are not coarse-pure enough for one accepted mask bit to represent the local Bayes action. The image+mask routing ablation is included as a diagnostic only; the main result uses image-only routing because it most closely matches the causal structure "image chooses a coarse coordinate, mask queries that coordinate."

### D.6 Language-stream grid

The language benchmark uses read-before-observe next-token prediction. The small run may use a character or word model trained locally, but the main run should use a frozen pretrained or fixed checkpoint model so that DGM is judged as an inference-time layer rather than as extra offline training. The stream is long contiguous text, not randomly shuffled tokens. The comparison set is: frozen model, continuous cache or $k$NN-LM, online soft-prompt/head/adapter updates, repair-only DGM-Embedding, and full DGM-Embedding.

The max run may precompute hidden states in fp16 and replay the adaptation layer, provided an end-to-end online subset verifies identical predictions up to floating-point tolerance. Report token NLL, perplexity, adaptation microseconds per token, peak memory, backward passes per token, and concept/edge growth over document position.

### D.7 Required failure diagnostics

The following checks are required before interpreting a positive result:

- **Order check:** the observed label or token must not enter any prediction made for that same round.
- **Backbone equality:** all methods must use identical frozen hidden states for the same stream.
- **Budget equality:** cache, $k$NN, and DGM memory budgets must be matched in bytes, not just in number of stored items.
- **Candidate recall:** controlled streams should report how often the oracle-compatible concept is present in the sparse candidate set.
- **Growth sanity:** on repair-only controls, full DGM should not grow a large graph; otherwise the refinement guard is too weak.
- **Ablation consistency:** if edge-free DGM matches full DGM on the hidden-context control, the experiment is not testing graph distinctions.

These diagnostics are stricter than ordinary benchmark reporting because the paper's claim is structural. A result that improves accuracy while failing the order, budget, or ablation checks is not evidence for the refine-or-repair claim.

## E DGM-Embedding: Architectural Extension for Language Models

For language modeling, the world state is a prefix and the consequence is the next observed token. This makes the refine-or-repair decision concrete. If a prefix type is already represented, the layer should repair its next-token memory. If the same runtime concept is repeatedly asked to predict incompatible next-token consequences, the layer should refine the concept graph. This appendix gives DGM-Embedding as an architectural path, not as a completed large-scale language-model result.

The layer is the language-model analogue of the finite DGM loop. The prefix hidden state chooses edge-gated concepts; their memories produce a calibrated next-token distribution mixed with the backbone; the true next token then supplies the detached consequence used for repair

or refinement. There is no inference-time inner optimization problem in this write path, unlike test-time adaptation methods that run an optimization step at inference time [SWL+20, WSL+21, NWZ+22, ZLF22, SLD+25].

### E.1 Hidden-state concepts

Let a frozen or slowly trained backbone produce hidden states

$$h_t = \phi_\theta(x_{\leq t}),$$

and let

$$q_t = Qh_t \in \mathbb{R}^{d_q}$$

be the DGM query. A DGM layer maintains frozen query-space anchors $a_j \in \mathbb{R}^{d_q}$, movable query-space centroids $c_j \in \mathbb{R}^{d_q}$, sparse next-token count memories $n_{j,y}$ with totals $n_j$, and distinction edges:

$$\mathcal{S}_t^{\text{emb}} = \left(\{a_j, c_j, (n_{j,y})_{y \in \text{supp}(j)}, n_j\}_{j=1}^{N_t}, G_t\right).$$

The formal hard-route information structure is generated by edge bits together with anchor-distance order events. Retrieval uses centroids as adaptive statistics, while edge generators and anchor ordering are computed from frozen anchors. The recall-oriented candidate set $N(q_t)$ is the same one used by DGM: centroid neighbors for adaptive locality, anchor neighbors for formal route recall, and graph neighbors for recent conflicts.

### E.2 Calibrated memory distribution

Let $p_0(y \mid x_{\leq t})$ be the backbone next-token distribution. For concept $j$, define the smoothed local distribution

$$p_j(y \mid x_{\leq t}) = \begin{cases} \dfrac{n_{j,y} + \alpha_0 p_0(y \mid x_{\leq t})}{n_j + \alpha_0}, & y \in \text{supp}(j), \\ \dfrac{\alpha_0 p_0(y \mid x_{\leq t})}{n_j + \alpha_0}, & y \notin \text{supp}(j), \end{cases}$$

where $\text{supp}(j)$ is the sparse set of tokens observed in concept $j$. The routed memory distribution and final prediction are

$$\begin{aligned} p_{\text{mem}}(y \mid x_{\leq t}) &= \sum_{j \in N(q_t)} \alpha_j(q_t) p_j(y \mid x_{\leq t}), \\ p_{\text{final}}(y \mid x_{\leq t}) &= (1 - \lambda_t) p_0(y \mid x_{\leq t}) + \lambda_t p_{\text{mem}}(y \mid x_{\leq t}), \qquad \lambda_t \in [0, 1]. \end{aligned}$$

The mixture is normalized without storing full-vocabulary counts at each concept. A learned or online-selected trust weight $\lambda_t$ controls how much the memory layer can move the backbone distribution; under bounded or clipped validation losses, Hedge over a small grid of $\lambda$ values gives regret to the best fixed trust weight in hindsight [Vov90, FS97, CBL06].

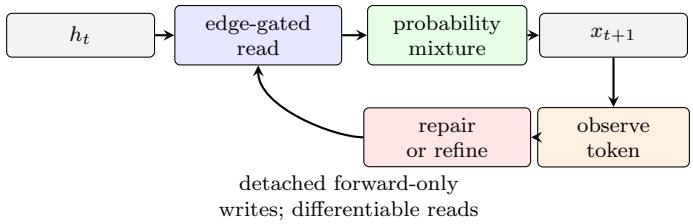


Figure 5: DGM-Embedding sequence update. The layer reads before the next token is known, then uses the observed next token as evidence for repair or refinement.

### E.3 Read before observe

DGM-Embedding uses the same prequential streaming order during training and inference whenever external consequences are available [Daw84]:

$$\text{predict } x_{t+1} \to \text{observe } x_{t+1} \to \text{repair or refine} \to \text{predict } x_{t+2}.$$

The order is important: the layer must predict before it sees the token that will update memory. After the next token is observed, its count is the detached sufficient-statistic write for every selected $j \in N(q_t)$, with all unselected memories unchanged:

$$n^+_{j,x_{t+1}} = n_{j,x_{t+1}} + \alpha_j(q_t), \qquad n^+_j = n_j + \alpha_j(q_t).$$

Hard-update mode is the special case $\alpha_{j^\star} = 1$ and $\alpha_j = 0$ for $j \neq j^\star$. If the penalized refinement test in (15) accepts a new concept, the layer creates a new anchor and centroid at $q_t$, initializes its sparse count memory with $x_{t+1}$, and adds guarded distinction edges to separated members of $\text{Confused}_q(q_t, x_{t+1})$. Ordinary repairs may update centroids and memories but leave anchors fixed; this preserves the hard-route information structure, although the smooth centroid-based read map may change.

During streaming prediction, document continuation, user correction, tool feedback, or supervised next-token evaluation, the next observed token is external evidence and can refine or repair the runtime memory. During unconstrained generation, the model should not update from its own sampled token by default, because self-generated samples are actions, not observed consequences.

**Algorithm 3** ObserveNextToken for DGM-Embedding

**Input:** prefix $x_{\leq t}$, observed token $x_{t+1}$, DGM state $\mathcal{S}_t$
$h_t \leftarrow \phi_\theta(x_{\leq t})$ and $q_t \leftarrow Qh_t$
retrieve $N(q_t)$ and compute the calibrated mixture $p_{\text{final}}$
$j^\star \leftarrow$ highest-weight concept
$\rho \leftarrow -\log p_{\text{final}}(x_{t+1} \mid x_{\leq t})$ for proposal; use clipped loss for bounded validation guarantees
**if** $\rho \leq \tau_{\text{repair}}$ **then**
    update DGM-Embedding memories for all $j \in N(q_t)$ using soft credit $\alpha_j(q_t)$
**else**
    accept a new anchored concept only if the penalized refinement gain test holds
**end if**
**Hard variant:** set $\alpha_{j^\star} = 1$ and $\alpha_j = 0$ for $j \neq j^\star$
**return** updated state

### E.4 Sequential detached training

The update is detached:

$$\mathcal{S}_{t+1} = \text{stopgrad}(\text{DGMObserve}(\text{stopgrad}(\mathcal{S}_t), \text{stopgrad}(h_t), x_{t+1}))\,.$$

In sequential detached training, the model trains slow parameters through the read path and learns fast state through the same observation rule used at inference. Detaching both the old state and the write input prevents anchor, centroid, and memory writes from retaining the backbone computation graph. The layer is not a replacement for backpropagation through the backbone. It is a replacement for inference-time and history-time backpropagation through the adaptive state.

**Algorithm 4** SequentialDetachedTrainStep for a DGM-Embedding Transformer layer

**Input:** token block $x_{1:L+1}$, slow parameters $\Theta$, DGM state $\mathcal{S}$
$\mathcal{L} \leftarrow 0$
**for** $t = 1, \ldots, L$ **do**
  compute hidden state $h_t$ using the backbone
  $q_t \leftarrow Qh_t$
  retrieve $N(q_t)$ from the concept bank
  compute edge-gated weights $\alpha_j(q_t)$
  apply the DGM-Embedding read
  produce logits for $x_{t+1}$ and accumulate $\mathcal{L} \leftarrow \mathcal{L} + \ell_t$
  $\mathcal{S} \leftarrow \text{stopgrad}(\text{DGMObserve}(\text{stopgrad}(\mathcal{S}), \text{stopgrad}(h_t), x_{t+1}))$
**end for**
update slow parameters $\Theta$ by backpropagation through the accumulated selected read computations
**return** updated $\Theta$ and $\mathcal{S}$

**Block-lagged approximation.** For throughput, an implementation may instead hold $\mathcal{S}$ fixed during the forward pass for a whole block, backpropagate through that block, and then apply detached DGMObserve updates for $t = 1, \ldots, L$. This block-lagged DGM training is more parallel, but it is an approximation: token $t + 1$ in the block does not see the state update produced after token $t$. It therefore introduces a train/inference mismatch and should not be described as the same observation program as streaming inference.

The main architectural claim stops here: DGM-Embedding is a next-token memory layer with differentiable reads and detached writes. Training modes for representation drift, the optional adapter variant, systems notes, and closed-form ridge repair are implementation extensions rather than the paper's central object; we give them in Appendix F.

## F DGM Implementation Extensions

This appendix collects DGM mechanics and large-model details that are useful for implementations but secondary to the main refine-or-repair argument.

### F.1 Trees as a hard-routing special case

A tree stores distinctions as a hierarchy. A mistake near the root changes every downstream routing decision. A graph stores distinctions locally between concepts. Creating a new concept does not

rewrite old paths; it adds a local alternative and edges explaining why the new concept differs from its neighbors. Trees are still contained in the view below, but as a constrained hard-routing case.

**Proposition F.1** (Trees as generalized hard-DGMs)**.** *Given a binary distinction tree, construct one generalized hard-route DGM concept for each leaf and attach the path distinctions as hard eligibility constraints for that concept. If the generalized hard route selects the unique eligible leaf concept and each concept memory equals the tree leaf predictor, then the generalized DGM and the tree make identical predictions.*

Thus the distinction-graph view contains trees after allowing arbitrary concept-level eligibility constraints. A decision tree is the sparse case in which distinctions are forced into a rooted hierarchy and routing is hard and single-path.

## F.2 DGM data-structure cost

Let

$$Q(h) = \sum_{j \in N(h)} |\mathrm{Inc}_t(j)|$$

be the number of incident edge gates evaluated for the selected candidates. With exact nearest-neighbor search, prediction costs

$$O(N_t d + Q(h)d + |N(h)|\, d + C_{\mathrm{local}}),$$

where $C_{\mathrm{local}}$ is the cost of evaluating the selected local memories and the $Q(h)d$ term evaluates dense linear edge gates. With approximate nearest-neighbor indexing, the $N_t d$ term can be replaced by the query cost of the index [IM98, JDJ19]. Creating an anchor-centroid pair costs $O(d)$ plus the cost of initializing its memory and the bookkeeping used for anchor-order queries. Adding $q$ guarded distinction edges costs $O(qd)$. If each concept stores a sparse categorical memory with average support size $\bar{s}$, runtime memory is

$$O(N_t(2d + \bar{s}) + |E_t|\, d).$$

An embedding-mean variant instead uses $O(N_t(2d + d_e) + |E_t|\, d)$ memory, but it is not a calibrated log-loss memory without an additional probability model.

**Theorem F.2** (DGM data-structure bound)**.** *For exact search over $N_t$ centroids in $\mathbb{R}^d$, one edge-gated DGM prediction costs $O(N_t d + Qd + |N|\, d + C_{\mathrm{local}})$, where $N = N(h)$ and $Q = Q(h)$ is an edge count. One observation that repairs a selected concept costs this plus the guarded local repair scoring cost. One observation that creates a new anchor-centroid pair and $q$ guarded distinction edges costs an additional $O(d + qd)$ plus anchor-order query bookkeeping. With sparse categorical memories of average support $\bar{s}$, the runtime state uses $O(N_t(2d + \bar{s}) + |E_t|\, d)$ memory.*

## F.3 Ridge local memory

For few-shot adaptation or local readout repair, a memory stores support embeddings $X_{\mathrm{sup}} \in \mathbb{R}^{n \times d}$ and labels $Y \in \mathbb{R}^{n \times C}$. The closed-form adapter is the dual ridge/Tikhonov solution [TA77, HK70]:

$$\Gamma = (X_{\mathrm{sup}} X_{\mathrm{sup}}^\top + \lambda I)^{-1} Y, \qquad \mathrm{logits}(z) = z X_{\mathrm{sup}}^\top \Gamma.$$

Projection Memory and CPM are advanced repair rules inside $M_j$ after the graph has fixed the relevant local concept; Appendix H treats that relation directly.

### F.4 Training modes for representation drift

Anchors, centroids, and edges live in query space. If the encoder or query map changes rapidly while the DGM state persists, old anchors and edges describe stale geometry. Reports should therefore state which training mode is used.

**Mode A: frozen encoder.** Train the backbone and query map first, then freeze $\phi_\theta$, $Q$, and the backbone distribution used for DGM smoothing while running DGM runtime learning. This is the cleanest protocol for the first experiments and is the default interpretation of the theory.

**Mode B: EMA query encoder.** Maintain a slowly moving query encoder

$$\bar{\theta} \leftarrow \beta\bar{\theta} + (1-\beta)\theta,$$

and create anchors, centroids, and edge generators in the query space of $\phi_{\bar{\theta}}$ and $Q_{\bar{\theta}}$. The backbone can still train, but the DGM state is tied to the slower geometry.

**Mode C: periodic state rebuild.** During end-to-end training, rebuild or clear the DGM state every $K$ optimization steps, or rebuild it from a replay buffer under the current query map. The formal guarantees then apply within a rebuild interval. Cross-interval state carryover is a systems approximation, not a claim of anchor-stable refinement.

### F.5 Non-canonical adapter extension

Beyond the categorical next-token memory in Appendix E, a richer optional adapter-style layer stores a local linear repair map, related to parameter-efficient adapter and LoRA modules but updated as a local DGM memory [HGJ+19, HSW+22]. It requires an explicit residual target and should not be conflated with the calibrated next-token memory mechanism:

$$\mathcal{S}_t^{\mathrm{adp}} = \{a_j, c_j, W_j, n_j\}_{j=1}^{N_t} \cup G_t, \qquad W_j \in \mathbb{R}^{d\times r}.$$

Let $K : \mathbb{R}^d \to \mathbb{R}^r$ be a learned or fixed key projection and set $k_t = Kh_t$. The adapter read is

$$\Delta h_t = \sum_{j\in N(q_t)} \alpha_j(q_t) W_j k_t, \qquad \tilde{h}_t = h_t + \gamma_\theta(h_t)\Delta h_t.$$

Here $W_j k_t$ is a hidden-space residual, so the write rule requires an explicit residual target $v_t \in \mathbb{R}^d$. Let $P_{\mathrm{emb}\to h} : \mathbb{R}^{d_e} \to \mathbb{R}^d$ be a chosen projection from output-embedding space to hidden-residual space. Natural choices include a token-embedding target $P_{\mathrm{emb}\to h} e_{x_{t+1}}$, a teacher-forced output-error target $P_{\mathrm{emb}\to h}(e_{x_{t+1}} - \hat{e}_t)$, or a distillation target $h_t^{\mathrm{teacher}} - h_t$. Without such a target, the adapter is only an architectural extension.

Given a local residual target, the projected rank-one repair for a selected concept is the same residual-correction pattern that appears in passive-aggressive updates, RLS/ridge-style online least squares, and delta-rule fast-weight memories [CDK+06, Vov97, SIS21]:

$$W_j^+ = W_j + \frac{\eta\alpha_j(q_t)}{1+\eta\alpha_j(q_t)\,\|k_t\|_2^2}(v_t - W_j k_t)k_t^\top.$$

Equivalently, a memory may maintain small ridge sufficient statistics and solve the local adapter in closed form [TA77, HK70].

### F.6 Cost and systems notes

During sequential detached training, backpropagation sees the selected read computation, while the DGM state is updated in the same order as streaming inference. The important comparison is with test-time gradient adaptation [SWL+20, WSL+21, NWZ+22, ZLF22, SLD+25]. A TTT-style layer typically performs an inner backward pass at inference time. A DGM layer performs retrieval, sparse local read, and closed-form or sufficient-statistic repair. The cost is forward-only:

$$\text{DGM inference} = \text{backbone forward} + \text{retrieval} + \text{sparse local repair}.$$

**Theorem F.3** (DGM layer cost)**.** *Consider a DGM adapter extension with hidden dimension $d$, query dimension $d_q$, local rank $r$, candidate count $|N|$, selected incident edge-gate count $Q_N$, and concept-bank query cost $C_{\text{ret}}(N_t, d_q)$. For one token, the read overhead is*

$$O(dd_q + C_{\text{ret}}(N_t, d_q) + Q_N d_q + |N|\, dr).$$

*If the write path is detached and uses rank-one local repair, the write overhead is*

$$O(dd_q + C_{\text{ret}}(N_t, d_q) + Q_N d_q + |N|\,(d_q + dr)).$$

*For a block of length $L$, the DGM state history need not be stored for backpropagation; the additional activation memory is the selected read computation, not the full sequence of memory states. The categorical DGM-Embedding layer replaces the $|N|\, dr$ adapter term by sparse count lookup, edge-gated mixture, and trust-weight update costs.*

The concept bank can be sharded by the same principle used in retrieval and sparse expert systems. Each device owns a subset of concepts. A query is routed to a small set of shards, each shard returns local top-$k$ candidates, and a final top-$k$ merge selects the memories used by the read path. Only selected memories receive gradients. Detached writes are sent back to the owning shards.

Budgeting is necessary for long training. A practical DGM layer maintains $N_t \leq N_{\max}$, merges only compatible unprotected concepts, and otherwise evicts or compresses low-score memories. These budget actions are maintenance operations, not learning operations in the formal refine-or-repair sense. The refine-or-repair theorems apply between maintenance events; merge, eviction, and compression may destroy information and must be evaluated as resource-management approximations.

### F.7 Closed-form local repair

Ridge memory is the main closed-form adapter used in our checks. Let $X_{\text{sup}} \in \mathbb{R}^{n\times d}$ be normalized support embeddings stored by a DGM memory and let $Y \in \mathbb{R}^{n\times C}$ be one-hot consequences. The adapter computes the dual ridge/Tikhonov solution [TA77, HK70]

$$\Gamma = (X_{\text{sup}} X_{\text{sup}}^\top + \lambda I)^{-1} Y, \qquad \text{logits}(z) = z X_{\text{sup}}^\top \Gamma.$$

This is projection-style repair: it fits the local adapter in one linear solve rather than by iterated backpropagation. In a large model, the same idea can be applied per concept, per document, or per retrieved shard after the relevant distinction structure has been fixed.

# G Proof Sketches

This section collects the main proof ideas in the order used by the paper: runtime excess risk decomposes into $\Delta_{\text{repair}}$ and $\Delta_{\text{refine}}$; repair-only learners have linear regret against refined oracles; useful refinements are exactly those that change the Bayes action; minimal refinement adds the missing distinction and nothing else; useful distinctions have exact value under standard losses; and guarded DGM updates decrease the local penalized objective. The measure-theoretic notation, conditional-expectation facts, and decision-theoretic Bayes-risk framing are standard [Bil95, Kal02, Bla53, Ber85]. Full formal versions appear in Appendices I, J, and K.

**Theorem G.1** (Runtime error decomposition, proof sketch for Theorem 4.2)**.** *The statement is Theorem 4.2.*

*Proof sketch.* Add and subtract the Bayes risk under the current information:

$$R_L(f_t) - R_L(\Pi^\star) = \Delta_{\text{repair}}(f_t, \Pi_t) + \Delta_{\text{refine}}(\Pi_t, \Pi^\star).$$

The first term is nonnegative because $f_t$ is one of the $\Pi_t$-measurable predictors over which $R_L(\Pi_t)$ optimizes. The second is nonnegative because a refinement enlarges the admissible predictor class. □

**Theorem G.2** (Repair-only regret, proof sketch for Theorem 4.3)**.** *The statement is Theorem 4.3.*

*Proof sketch.* Condition on the history before round $t$. A repair-only learner's prediction is $\Pi$-measurable, so its conditional expected loss is at least $R_L(\Pi)$ by definition of Bayes risk under the partition. Summing over rounds gives cumulative expected loss at least $TR_L(\Pi)$. A refined oracle using $\Pi^\star$ pays $TR_L(\Pi^\star)$, so the regret lower bound follows by subtraction. □

**Theorem G.3** (Loss-relevant refinement, proof sketch for Theorem J.1)**.** *The statement is Theorem 6.3.*

*Proof sketch.* If the $\mathcal{G}$-Bayes action is already $\mathcal{F}$-measurable, then it is feasible under the old information and attains the refined risk, so the refinement gap is zero. Conversely, if the old and refined risks are equal, any $\mathcal{F}$-Bayes action is also $\mathcal{G}$-optimal. Almost sure uniqueness of the $\mathcal{G}$-Bayes action forces equality with the refined Bayes action, so the refined action has an $\mathcal{F}$-measurable version. □

**Theorem G.4** (Contradiction, proof sketch for Theorem I.3)**.** *The statement is Corollary 4.6.*

*Proof sketch.* If $f$ is $\mathcal{P}$-measurable and $\omega, \omega'$ lie in the same atom, then

$$f(\omega) = f(\omega').$$

If $f(\omega) = y(\omega)$ and $f(\omega') = y(\omega')$, then

$$y(\omega) = y(\omega'),$$

contradicting the hypothesis. □

**Theorem G.5** (Minimal finite refinement, proof sketch for Theorem I.1)**.** *The statement is Theorem 5.2.*

*Proof sketch.* Every atom of $\mathcal{P}_D$ lies inside an atom of $\mathcal{P}$, so $\mathcal{P}_D$ refines $\mathcal{P}$. Also

$$D = \bigcup_{B \in \mathcal{P}} (B \cap D),$$

so $D$ is $\mathcal{P}_D$-measurable. If $\mathcal{Q}$ refines $\mathcal{P}$ and makes $D$ measurable, then every atom $Q \in \mathcal{Q}$ satisfies

$$Q \subseteq B$$

for some $B \in \mathcal{P}$, and also either $Q \subseteq D$ or $Q \subseteq D^c$. Hence

$$Q \subseteq B \cap D \qquad \text{or} \qquad Q \subseteq B \cap D^c.$$

Thus $\mathcal{Q}$ refines $\mathcal{P}_D$. □

**Theorem G.6** (Minimal sigma-algebra refinement, proof sketch for Theorem I.2)**.** *The statement is Theorem 5.4.*

*Proof sketch.* By definition,

$$\mathcal{F} \vee \sigma(U) = \sigma(\mathcal{F} \cup \sigma(U)).$$

This sigma-algebra contains $\mathcal{F}$ and makes $U$ measurable. If $\mathcal{G}$ also contains $\mathcal{F}$ and makes $U$ measurable, then

$$\mathcal{F} \cup \sigma(U) \subseteq \mathcal{G}.$$

Since $\mathcal{G}$ is a sigma-algebra,

$$\sigma(\mathcal{F} \cup \sigma(U)) \subseteq \mathcal{G}.$$

□

**Theorem G.7** (Risk monotonicity, proof sketch for Theorem J.2)**.** *The statement is Theorem 6.2.*

*Proof sketch.* If $\mathcal{F} \subseteq \mathcal{G}$, then every $\mathcal{F}$-measurable action is $\mathcal{G}$-measurable. Therefore

$$\{a : a \text{ is } \mathcal{F}\text{-measurable}\} \subseteq \{a : a \text{ is } \mathcal{G}\text{-measurable}\}.$$

Taking the infimum of the same expected loss over the larger set gives

$$R_L(\mathcal{G}) \leq R_L(\mathcal{F}).$$

□

**Theorem G.8** (Log-loss value, proof sketch for Theorem J.3)**.** *The statement is Theorem 6.4.*

*Proof sketch.* For any $\mathcal{F}$-measurable conditional distribution $q$, the standard log-loss decomposition gives

$$\mathbb{E}[-\log q(Y)] = H(Y \mid \mathcal{F}) + \mathbb{E}\left[D_{\mathrm{KL}}(\mathbb{P}(Y \in \cdot \mid \mathcal{F}) \| q(\cdot))\right].$$

The minimizer is $q^\star = \mathbb{P}(Y \in \cdot \mid \mathcal{F})$, so $R_{\log}(\mathcal{F}) = H(Y \mid \mathcal{F})$. Similarly $R_{\log}(\mathcal{G}) = H(Y \mid \mathcal{G})$. Therefore

$$R_{\log}(\mathcal{F}) - R_{\log}(\mathcal{G}) = H(Y \mid \mathcal{F}) - H(Y \mid \mathcal{G}) = I(Y; \mathcal{G} \mid \mathcal{F}).$$

□

**Theorem G.9** (Squared-loss value, proof sketch for Theorem J.5)**.** *The statement is Theorem 6.6.*

*Proof sketch.* The optimal $\mathcal{F}$-predictor is $\mathbb{E}[Y \mid \mathcal{F}]$, the standard $L^2$ projection. Since $\mathcal{F} \subseteq \mathcal{G}$,

$$Y - \mathbb{E}[Y \mid \mathcal{F}] = (Y - \mathbb{E}[Y \mid \mathcal{G}]) + (\mathbb{E}[Y \mid \mathcal{G}] - \mathbb{E}[Y \mid \mathcal{F}]) .$$

The two terms are orthogonal because the first has conditional mean zero given $\mathcal{G}$ and the second is $\mathcal{G}$-measurable. Taking squared $\ell_2$ norms and expectations gives the identity. □

**Theorem G.10** (Anchor edge separation, proof sketch for Theorem K.1)**.** *The statement is Theorem 8.5.*

*Proof sketch.* With $u = (a_i - a_j)/\|a_i - a_j\|_2$ and $b = u^\top(a_i + a_j)/2$,

$$u^\top a_i - b = \frac{1}{2}u^\top(a_i - a_j) = \frac{1}{2}\|a_i - a_j\|_2 ,$$
$$u^\top a_j - b = -\frac{1}{2}u^\top(a_i - a_j) = -\frac{1}{2}\|a_i - a_j\|_2 .$$

□

**Theorem G.11** (DGM graph partition, proof sketch for Theorem K.2)**.** *The statement is Theorem 8.6.*

*Proof sketch.* The graph signature records the value of every binary edge generator. Equality of signatures is an equivalence relation, and its classes are exactly the nonempty common level sets of those generators. Adding a new edge appends one binary coordinate to the signature, so each old atom is either left intact or cut by the two events $g^{-1}(1)$ and $g^{-1}(0)$. □

**Theorem G.12** (Hard-route measurability, proof sketch for Theorem K.3)**.** *The statement is Theorem 8.7.*

*Proof sketch.* Edge eligibility is determined by finitely many edge-bit events, so it is measurable with respect to $\mathcal{F}_t^{\text{edge}}$. The anchor-order sigma-algebra generated by all pairwise anchor comparisons determines the nearest anchor in any eligible subset under deterministic tie-breaking. The exact hard selected index is a finite composition of these two finite decisions, so it is measurable with respect to their join. Movable centroids can still be used for the soft retrieval path, but they are not part of this formal information structure. □

**Theorem G.13** (Soft routing hard limit, proof sketch for Theorem K.4)**.** *The statement is Theorem 8.9.*

*Proof sketch.* The sparse soft read can only assign mass to candidates it retrieved. Therefore, if the exact hard-route concept is omitted from the candidate set, no temperature limit can recover that route. Under candidate recall, the remaining argument is a finite softmax and gate-sharpening calculation. For ordinary nearest-center routing, every nonnearest candidate has unnormalized weight smaller by at least $\exp(-\delta/T)$, so the total nonnearest mass is bounded by a finite candidate-count factor times this exponential. For a structural edge gate with uniformly positive weight, a wrong-side signed margin $-\delta_e$ contributes a log-sigmoid term bounded by $-\delta_e/\tau_e$. Degree normalization rescales the exponent but does not remove exponential decay under a uniform degree bound. After normalizing against an eligible candidate with compatibility bounded below, the wrong-side mass vanishes if the wrong-side/reference distance-score ratio is bounded, or more generally if the joint limit satisfies $\beta_{\min}\delta_e/(\sqrt{D_{\max}}\tau_e) - \Delta_d/T \to +\infty$. □

**Theorem G.14** (Refine-or-repair descent, proof sketch for Theorem K.5)**.** *The statement is Theorem 8.11.*

*Proof sketch.* Guarded repair proposes local memory or centroid changes while keeping anchors and edges fixed, then commits only candidates that do not increase empirical loss on the fixed scoring buffer $\mathcal{B}_t^{\text{score}}$. The identity candidate is always feasible. The concept and edge penalties therefore stay fixed, so the local objective $J_{\mathcal{B}_t^{\text{score}}}$ does not increase. A refinement that creates one anchored concept and accepted edge set $E_{\text{new}}$ changes $J_{\mathcal{B}_t^{\text{score}}}$ by the empirical-risk decrease on the scoring buffer minus $\lambda_{\text{concept}} + \lambda_{\text{edge}} |E_{\text{new}}|$, where the concept penalty includes the induced anchor-order bookkeeping. This is exactly the penalized refinement gain in (14). The acceptance test requires this net decrease to exceed the empirical repair gain plus $\tau + 2\epsilon_m$. □

**Theorem G.15** (Safe refinement, proof sketch for Theorem K.6)**.** *The statement is Theorem 8.12.*

*Proof sketch.* At each time $t$, condition on the filtration containing the past, current DGM state, and proposal buffer. The predictable finite candidate class is then fixed, while the scoring buffer remains fresh or otherwise unused by prior proposal and state-selection decisions. Hoeffding's inequality bounds the deviation between empirical and population risk for the old state and for each candidate-refined state [Hoe63]. A union bound over the finite class gives failure probability of order $\delta/t^2$ after using the displayed $\epsilon_t$, and a second union bound over all times is summable. Each raw gain is a difference of two risks, so its empirical-population deviation is at most twice the risk deviation. If the empirical raw gain exceeds complexity cost plus $\tau + 2\epsilon_t$, the population raw gain exceeds cost plus $\tau$ on this high-probability event. □

**Corollary G.16** (Bounded LM score, proof sketch for Corollary K.7)**.** *The statement is Corollary 8.13.*

*Proof sketch.* Clipping and normalizing next-token negative log likelihood gives a score in $[0, 1]$. The adaptive refinement theorem therefore applies directly to the clipped scoring rule. The conclusion is intentionally about clipped population gain, not raw unbounded cross-entropy. □

**Theorem G.17** (Anchor-stable DGM information structure, proof sketch for Theorem K.8)**.** *The statement is Theorem 8.14.*

*Proof sketch.* Every edge generator $g_e(h) = \mathbf{1}\{u_e^\top h > b_e\}$ is a deterministic function of the two frozen endpoint anchors. A repair step changes neither endpoint anchor, so it changes neither $u_e$ nor $b_e$. It also leaves every anchor-distance comparison event unchanged. Therefore the anchor-generated DGM information structure is unchanged, even though the retrieval centroids and local memories may be repaired. □

**Corollary G.18** (Finite refinements, proof sketch for Corollary K.9)**.** *The statement is Corollary 8.15.*

*Proof sketch.* After $m$ accepted refinements a common potential $\Phi$ has decreased by at least $m\tau$. Since the potential is nonnegative, $m\tau \leq \Phi(\mathcal{S}_0)$. This argument requires a common potential; changing local scoring buffers do not by themselves define a global finiteness bound. □

**Proposition G.19** (Tree as generalized hard-DGM, proof sketch for Proposition K.10)**.** *The statement is Proposition F.1.*

*Proof sketch.* Make one concept for each tree leaf and attach the root-to-leaf binary tests as hard eligibility constraints. Every input satisfies exactly the path constraints of the leaf reached by the tree, so the generalized hard route selects the same memory and returns the same prediction. □

**Theorem G.20** (DGM data structure, proof sketch for Theorem K.11)**.** *The statement is Theorem F.2.*

*Proof sketch.* A prediction computes centroid and anchor distances from $h$ to $N_t$ concepts in $\mathbb{R}^d$, costing

$$O(N_t d).$$

It then evaluates $Q(h)$ selected incident edge gates and $|N(h)|$ selected local memories. Dense linear edge gates cost $O(Q(h)d)$, so this part costs $O(Q(h)d + |N(h)|\, d + C_{\text{local}})$ including sparse routing weights. Guarded repair adds the cost of scoring proposed local candidates. Creating one anchor-centroid pair stores two vectors in $\mathbb{R}^d$, still $O(d)$. Adding $q$ distinction edges stores $q$ vectors and thresholds, costing

$$O(qd).$$

For mean memories, each concept stores $a_j, c_j \in \mathbb{R}^d$ and $r_j \in \mathbb{R}^{d_e}$, while each edge stores one distinction vector in $\mathbb{R}^d$. Hence memory is

$$O(N_t(2d + d_e) + |E_t|\, d).$$

□

**Theorem G.21** (DGM layer cost, proof sketch for Theorem K.12)**.** *The statement is Theorem F.3.*

*Proof sketch.* Computing $q = Qh$ costs $O(dd_q)$. Retrieval costs $C_{\text{ret}}(N_t, d_q)$ by definition. Dense edge-gate evaluation over selected incident edges costs $O(Q_N d_q)$. For each selected concept, a rank-$r$ adapter computes

$$W_j K h.$$

The matrix-vector product with one local adapter costs $O(dr)$, so $|N|$ selected adapters cost

$$O(|N|\, dr).$$

The detached write path repeats query, retrieval, and edge-gate evaluation, then updates only selected local states. A rank-one local repair or low-rank sufficient-statistic update costs $O(dr)$ per selected memory, with $O(d_q)$ additional concept bookkeeping. Hence write overhead is

$$O(dd_q + C_{\text{ret}}(N_t, d_q) + Q_N d_q + |N|\,(d_q + dr)).$$

Because the write path is detached, backpropagation does not need intermediate copies of $\mathcal{S}_t$ for all $t$. It stores the selected read computation used in the forward loss. □

**Theorem G.22** (One-hot memory, proof sketch for Theorem K.13)**.** *The statement is Theorem H.1.*

*Proof sketch.* If $\omega, \omega' \in B_i$, then both one-hot features equal $e_i$, so

$$W\phi_{\mathcal{P}}(\omega) = We_i = W\phi_{\mathcal{P}}(\omega').$$

Thus $W\phi_{\mathcal{P}}$ is constant on atoms. Conversely, if $f$ is constant on each $B_i$, put that constant value in column $i$ of $W$. Then

$$f(\omega) = W\phi_{\mathcal{P}}(\omega)$$

for every $\omega$. □

**Theorem G.23** (CPM conflict, proof sketch for Theorem K.14)**.** *The statement is Theorem H.2.*

*Proof sketch.* If $\omega, \omega' \in B_i$, then

$$\phi_{\mathcal{P}}(\omega) = \phi_{\mathcal{P}}(\omega') = e_i.$$

After committing $We_i = v(\omega)$, the later evidence $We_i = v(\omega')$ has the same key. Its innovation relative to the old key span is

$$z = (I - e_i e_i^\top)e_i = 0.$$

Its residual is

$$e = v(\omega') - We_i = v(\omega') - v(\omega) \neq 0.$$

□

# H From Distinctions to Projection Memory

DGM uses refinement and repair in the same runtime object. Distinction learning asks what the learner can tell apart. Projection learning assumes such a representation and asks how a state inside it should be minimally repaired. The repair side is related to Bregman projection, Moore-Penrose projection, ridge/Tikhonov repair, passive-aggressive learning, online regression, and fast-weight memory updates [Bre67, Pen55, TA77, HK70, CDK+06, Vov97, BHM+16, SIS21]. This section makes the relation formal in the finite one-hot case.

## H.1 One-hot partition memory

Let $\mathcal{P} = \{B_1, \ldots, B_n\}$ be a finite partition and let $\phi_{\mathcal{P}} : \Omega \to \mathbb{R}^n$ be its one-hot feature map:

$$\phi_{\mathcal{P}}(\omega) = e_i \qquad \text{if} \qquad \omega \in B_i.$$

A memory matrix $W \in \mathbb{R}^{m \times n}$ defines a value map

$$f_W(\omega) = W\phi_{\mathcal{P}}(\omega).$$

This is exactly a table over the atoms of $\mathcal{P}$: every state inside the same atom receives the same value.

**Theorem H.1** (One-hot partition memory)**.** *For every $W \in \mathbb{R}^{m \times n}$, the map $f_W(\omega) = W\phi_{\mathcal{P}}(\omega)$ is $\mathcal{P}$-measurable. Conversely, every $\mathcal{P}$-measurable map $f : \Omega \to \mathbb{R}^m$ is represented by some $W$ through $f = f_W$.*

Thus a one-hot associative memory is not merely analogous to a partition. It is an exact finite representation of all vector-valued predictors measurable with respect to that partition.

## H.2 CPM conflict as missing distinction

We take $K$ to be the matrix whose columns are stored keys, so $KK^\dagger$ is the orthogonal projector onto their span. For old key matrices $K$, a new key $k$ has CPM innovation

$$z = (I - KK^\dagger)k. \tag{20}$$

Conservative Projection Memory detects conflict when a new key has zero innovation but nonzero residual. In the one-hot finite representation, this diagnostic is exactly the statement that two world states have been placed in the same atom despite requiring different values.

**Theorem H.2** (CPM conflict equals missing distinction)**.** *Let $\omega, \omega' \in B_i$ for an atom $B_i \in \mathcal{P}$, and suppose required values satisfy $v(\omega) \neq v(\omega')$. Let $k = \phi_{\mathcal{P}}(\omega) = \phi_{\mathcal{P}}(\omega') = e_i$. If $We_i = v(\omega)$ has already been committed, then evidence requiring $We_i = v(\omega')$ has CPM innovation $z = 0$ and residual $e \neq 0$.*

The theorem explains why a projection update should stop. The key is not new; the old information structure maps both states to the same coordinate. The residual is nonzero because the consequence differs. The missing update is a refinement of $\mathcal{P}$ that separates $\omega$ from $\omega'$.

### H.3 The hierarchy

The resulting hierarchy is

$$\text{distinction refinement} \supset \text{projection repair} \supset \text{implicit gradient} \supset \text{explicit gradient descent.}$$

Distinction refinement changes the sigma-algebra $\mathcal{F}_t$. Projection repair changes a state $s_t$ inside a fixed information geometry. Gradient descent is the linearized $\ell_2$ special case of soft projection, and backpropagation is the mechanism that computes such gradients in differentiable static graphs [RHW86].

This is not a rejection of gradient learning or projection memory. It is a separation of roles. When the representation is adequate, repair and optimization are the right tools. When the representation identifies states that consequences require it to separate, the first learning act is to create the missing distinction.

## I Minimal Refinement Proofs

The statements in this appendix use standard facts about finite partitions, generated sigma-algebras, and measurability [Bil95, Kal02]. They are recalled only to fix notation for the runtime-learning interpretation: refinement is the minimal information update needed by new evidence.

**Theorem I.1** (Minimal finite refinement, formal version of Theorem 5.2)**.** *Let $\Omega$ be finite, let $\mathcal{P}$ be a partition of $\Omega$, and let $D \subseteq \Omega$. Define*

$$\mathcal{P}_D = \{B \cap D : B \in \mathcal{P}, B \cap D \neq \varnothing\} \cup \{B \cap D^c : B \in \mathcal{P}, B \cap D^c \neq \varnothing\}.$$

*Then:*

- **Part 1.** *$\mathcal{P}_D$ is a partition of $\Omega$.*
- **Part 2.** *$\mathcal{P}_D$ refines $\mathcal{P}$.*
- **Part 3.** *$D$ is $\mathcal{P}_D$-measurable.*
- **Part 4.** *If $\mathcal{Q}$ refines $\mathcal{P}$ and $D$ is $\mathcal{Q}$-measurable, then $\mathcal{Q}$ refines $\mathcal{P}_D$.*

*Consequently, $\mathcal{P}_D$ is the unique minimal refinement of $\mathcal{P}$ making $D$ measurable.*

*Proof.* For each $B \in \mathcal{P}$, the nonempty sets among $B \cap D$ and $B \cap D^c$ are disjoint and have union $B$. Since the atoms of $\mathcal{P}$ are disjoint and cover $\Omega$, the atoms of $\mathcal{P}_D$ are disjoint and cover $\Omega$. Thus Part 1 holds.

Every atom of $\mathcal{P}_D$ is contained in some $B \in \mathcal{P}$, so Part 2 holds. Also

$$D = \bigcup_{B \in \mathcal{P}} (B \cap D),$$

where empty intersections are ignored. Hence $D$ is a union of atoms of $\mathcal{P}_D$, proving Part 3.

Let $\mathcal{Q}$ refine $\mathcal{P}$ and make $D$ measurable. For any atom $Q \in \mathcal{Q}$, there exists $B \in \mathcal{P}$ with

$$Q \subseteq B.$$

Since $D$ is $\mathcal{Q}$-measurable, each atom of $\mathcal{Q}$ is either contained in $D$ or disjoint from $D$. Hence

$$Q \subseteq B \cap D \qquad \text{or} \qquad Q \subseteq B \cap D^c.$$

Thus each atom of $\mathcal{Q}$ is contained in an atom of $\mathcal{P}_D$, so $\mathcal{Q}$ refines $\mathcal{P}_D$. This proves Part 4.

If another partition has the same minimal property, it refines $\mathcal{P}_D$ and is refined by $\mathcal{P}_D$, so the two partitions have the same atoms. □

**Theorem I.2** (Minimal sigma-algebra refinement, formal version of Theorem 5.4)**.** *Let $(\Omega, \mathcal{E})$ be a measurable space, let $\mathcal{F} \subseteq \mathcal{E}$ be a sigma-algebra, and let $U : \Omega \to \mathcal{U}$ be a measurable map into a measurable space $(\mathcal{U}, \Sigma_{\mathcal{U}})$. The join $\mathcal{F} \vee \sigma(U)$ is the smallest sigma-algebra $\mathcal{G} \subseteq \mathcal{E}$ such that $\mathcal{F} \subseteq \mathcal{G}$ and $U$ is $\mathcal{G}$-measurable.*

*Proof.* By definition,

$$\mathcal{F} \vee \sigma(U) = \sigma(\mathcal{F} \cup \sigma(U)).$$

Therefore $\mathcal{F} \subseteq \mathcal{F} \vee \sigma(U)$ and $\sigma(U) \subseteq \mathcal{F} \vee \sigma(U)$, so $U$ is measurable with respect to $\mathcal{F} \vee \sigma(U)$.

Let $\mathcal{G}$ be any sigma-algebra such that $\mathcal{F} \subseteq \mathcal{G}$ and $U$ is $\mathcal{G}$-measurable. The latter condition means $\sigma(U) \subseteq \mathcal{G}$. Hence

$$\mathcal{F} \cup \sigma(U) \subseteq \mathcal{G}.$$

Since $\mathcal{G}$ is a sigma-algebra,

$$\sigma(\mathcal{F} \cup \sigma(U)) \subseteq \mathcal{G}.$$

Thus $\mathcal{F} \vee \sigma(U) \subseteq \mathcal{G}$. □

**Theorem I.3** (Contradiction requires distinction, formal version of Corollary 4.6)**.** *Let $I : \Omega \to \mathcal{Z}$ be an information map and let $y : \Omega \to \mathsf{A}$ be a required output. Suppose $I(\omega) = I(\omega')$ but $y(\omega) \neq y(\omega')$. Then no predictor $f = g \circ I$ satisfies both*

$$f(\omega) = y(\omega), \qquad f(\omega') = y(\omega').$$

*Proof.* Since $f = g \circ I$ and $I(\omega) = I(\omega')$,

$$f(\omega) = f(\omega').$$

If both requirements held, then

$$y(\omega) = f(\omega) = f(\omega') = y(\omega'),$$

contradicting $y(\omega) \neq y(\omega')$. □

# J Value of Distinction Proofs

The proofs below use standard tools from statistical decision theory, information theory, proper scoring rules, and conditional expectation: Bayes risk under constrained information, log-loss optimality of the conditional law, and the $L^2$ projection identity for conditional expectation [Bla53, Ber85, CT06, GR07, Bil95, Kal02]. The derivations are included only to specialize these standard identities to the paper's notation.

Throughout the measurable-space statements, the action space $\mathsf{A}$ is equipped with a sigma-algebra $\Sigma_{\mathsf{A}}$, actions are measurable maps into $(\mathsf{A}, \Sigma_{\mathsf{A}})$, and losses are measurable with finite expectation for the actions under consideration.

**Theorem J.1** (Loss-relevant refinement, formal version of Theorem 6.3)**.** *Let $\mathcal{F} \subseteq \mathcal{G} \subseteq \mathcal{E}$. Assume Bayes actions exist under $\mathcal{F}$ and $\mathcal{G}$, and that the $\mathcal{G}$-Bayes action is almost surely unique. Then*

$$R_L(\mathcal{F}) - R_L(\mathcal{G}) = 0$$

*if and only if $a^\star_{\mathcal{G}}$ has an $\mathcal{F}$-measurable version.*

*Proof.* If $a^\star_{\mathcal{G}}$ is $\mathcal{F}$-measurable, then it is feasible for $R_L(\mathcal{F})$, so

$$R_L(\mathcal{F}) \leq \mathbb{E}[L(Y, a^\star_{\mathcal{G}})] = R_L(\mathcal{G}).$$

The inclusion $\mathcal{F} \subseteq \mathcal{G}$ gives $R_L(\mathcal{G}) \leq R_L(\mathcal{F})$, so the risks are equal. Conversely, if the risks are equal, let $a^\star_{\mathcal{F}}$ be an $\mathcal{F}$-Bayes action. It is also $\mathcal{G}$-measurable and achieves $R_L(\mathcal{G})$. By almost sure uniqueness of $a^\star_{\mathcal{G}}$, $a^\star_{\mathcal{F}} = a^\star_{\mathcal{G}}$ almost surely. Hence $a^\star_{\mathcal{G}}$ has an $\mathcal{F}$-measurable version. □

**Theorem J.2** (Bayes-risk monotonicity, formal version of Theorem 6.2)**.** *Let $Y$ be a target random variable, let $\mathsf{A}$ be an action space, and let $L$ be an integrable loss. If $\mathcal{F} \subseteq \mathcal{G}$, then*

$$R_L(\mathcal{G}) \leq R_L(\mathcal{F}).$$

*Proof.* Define

$$\mathcal{D}_{\mathcal{F}} = \{a : \Omega \to \mathsf{A} : a \text{ is } \mathcal{F}\text{-measurable}\}, \qquad \mathcal{D}_{\mathcal{G}} = \{a : \Omega \to \mathsf{A} : a \text{ is } \mathcal{G}\text{-measurable}\}.$$

Since $\mathcal{F} \subseteq \mathcal{G}$,

$$\mathcal{D}_{\mathcal{F}} \subseteq \mathcal{D}_{\mathcal{G}}.$$

Therefore

$$\begin{aligned} R_L(\mathcal{G}) &= \inf_{a \in \mathcal{D}_{\mathcal{G}}} \mathbb{E}[L(Y, a)] \\ &\leq \inf_{a \in \mathcal{D}_{\mathcal{F}}} \mathbb{E}[L(Y, a)] \\ &= R_L(\mathcal{F}). \end{aligned}$$

□

**Theorem J.3** (Log-loss value, formal version of Theorem 6.4)**.** *Let $Y$ be finite and let $\mathcal{F} \subseteq \mathcal{G}$. Under log loss, an admissible action is a measurable conditional distribution $q(\cdot)$ on the range of $Y$, and the loss is $-\log q(Y)$. Then*

$$R_{\log}(\mathcal{F}) - R_{\log}(\mathcal{G}) = I(Y; \mathcal{G} \mid \mathcal{F}) = \mathbb{E}\left[D_{\mathrm{KL}}(\mathbb{P}(Y \in \cdot \mid \mathcal{G}) \| \mathbb{P}(Y \in \cdot \mid \mathcal{F}))\right].$$

*Proof.* For any $\mathcal{F}$-measurable conditional distribution $q$, write $p_{\mathcal{F}}(y) = \mathbb{P}(Y = y \mid \mathcal{F})$. Then

$$\begin{aligned}
\mathbb{E}[-\log q(Y) \mid \mathcal{F}] &= \sum_y p_{\mathcal{F}}(y)(-\log q(y)) \\
&= \sum_y p_{\mathcal{F}}(y)(-\log p_{\mathcal{F}}(y)) + \sum_y p_{\mathcal{F}}(y) \log \frac{p_{\mathcal{F}}(y)}{q(y)} \\
&= H(Y \mid \mathcal{F}) + D_{\mathrm{KL}}(p_{\mathcal{F}} \| q).
\end{aligned}$$

Taking expectation and minimizing over $q$ gives

$$R_{\log}(\mathcal{F}) = H(Y \mid \mathcal{F}).$$

Likewise,

$$R_{\log}(\mathcal{G}) = H(Y \mid \mathcal{G}).$$

By definition of conditional mutual information between $Y$ and the additional information $\mathcal{G}$ given $\mathcal{F}$,

$$I(Y; \mathcal{G} \mid \mathcal{F}) = H(Y \mid \mathcal{F}) - H(Y \mid \mathcal{G}).$$

The conditional-KL form follows from the tower property:

$$\begin{aligned}
&\mathbb{E}\left[D_{\mathrm{KL}}(\mathbb{P}(Y \in \cdot \mid \mathcal{G}) \| \mathbb{P}(Y \in \cdot \mid \mathcal{F}))\right] \\
&\quad = \mathbb{E}\left[\sum_y p_{\mathcal{G}}(y) \log p_{\mathcal{G}}(y) - \sum_y p_{\mathcal{G}}(y) \log p_{\mathcal{F}}(y)\right] \\
&\quad = -H(Y \mid \mathcal{G}) - \mathbb{E}\left[\sum_y p_{\mathcal{F}}(y) \log p_{\mathcal{F}}(y)\right] \\
&\quad = H(Y \mid \mathcal{F}) - H(Y \mid \mathcal{G}).
\end{aligned}$$

Combining proves the claim. □

**Corollary J.4** (Binary distinction value, formal version of Corollary 6.5)**.** *Let $U \in \{0, 1\}$ and $\mathcal{G} = \mathcal{F} \vee \sigma(U)$. Under log loss,*

$$\begin{aligned}
R_{\log}(\mathcal{F}) - R_{\log}(\mathcal{G}) &= I(Y; U \mid \mathcal{F}) \\
&= \mathbb{E}\left[\sum_{u \in \{0,1\}} \mathbb{P}(U = u \mid \mathcal{F}) D_{\mathrm{KL}}(\mathbb{P}(Y \in \cdot \mid \mathcal{F}, U = u) \| \mathbb{P}(Y \in \cdot \mid \mathcal{F}))\right].
\end{aligned}$$

*Proof.* Apply Theorem J.3 with $\mathcal{G} = \mathcal{F} \vee \sigma(U)$. Conditioning on $\mathcal{F} \vee \sigma(U)$ is the same as conditioning on $\mathcal{F}$ and the binary value of $U$, yielding the displayed expansion over $u \in \{0, 1\}$. □

**Theorem J.5** (Squared-loss value, formal version of Theorem 6.6)**.** *Let $Y \in L^2(\Omega; \mathbb{R}^d)$ and let $L(Y, a) = \|Y - a\|_2^2$. If $\mathcal{F} \subseteq \mathcal{G}$, then*

$$R_2(\mathcal{F}) - R_2(\mathcal{G}) = \mathbb{E}\left[\|\mathbb{E}[Y \mid \mathcal{G}] - \mathbb{E}[Y \mid \mathcal{F}]\|_2^2\right].$$

*Proof.* The optimal $\mathcal{F}$-measurable predictor is $\mathbb{E}[Y \mid \mathcal{F}]$, and the optimal $\mathcal{G}$-measurable predictor is $\mathbb{E}[Y \mid \mathcal{G}]$. Let

$$\varepsilon = Y - \mathbb{E}[Y \mid \mathcal{G}], \qquad \delta = \mathbb{E}[Y \mid \mathcal{G}] - \mathbb{E}[Y \mid \mathcal{F}].$$

Then

$$Y - \mathbb{E}[Y \mid \mathcal{F}] = \varepsilon + \delta.$$

Since $\delta$ is $\mathcal{G}$-measurable and $\mathbb{E}[\varepsilon \mid \mathcal{G}] = 0$,

$$\mathbb{E}[\langle \varepsilon, \delta \rangle \mid \mathcal{G}] = \langle \mathbb{E}[\varepsilon \mid \mathcal{G}], \delta \rangle = 0.$$

Thus

$$\begin{aligned}
\mathbb{E}\,\|Y - \mathbb{E}[Y \mid \mathcal{F}]\|_2^2 &= \mathbb{E}\,\|\varepsilon + \delta\|_2^2 \\
&= \mathbb{E}\,\|\varepsilon\|_2^2 + \mathbb{E}\,\|\delta\|_2^2 \\
&= R_2(\mathcal{G}) + \mathbb{E}\left[\|\mathbb{E}[Y \mid \mathcal{G}] - \mathbb{E}[Y \mid \mathcal{F}]\|_2^2\right].
\end{aligned}$$

Rearranging proves the identity. □

**Theorem J.6** (Minimal loss-sufficient refinement, formal version of Theorem 6.7)**.** *Let $\mathcal{F} \subseteq \mathcal{G}$ and assume the $\mathcal{G}$-Bayes action $a^\star_{\mathcal{G}} : \Omega \to \mathsf{A}$ exists as a $(\mathcal{G}, \Sigma_{\mathsf{A}})$-measurable map and is almost surely unique. Also assume the Bayes infimum is attained for every intermediate sigma-algebra $\mathcal{H}$ with $\mathcal{F} \subseteq \mathcal{H} \subseteq \mathcal{G}$ that is considered below. Up to null sets, the smallest sigma-algebra $\mathcal{H}$ satisfying*

$$\mathcal{F} \subseteq \mathcal{H} \subseteq \mathcal{G}, \qquad R_L(\mathcal{H}) = R_L(\mathcal{G})$$

*is $\mathcal{F} \vee \sigma(a^\star_{\mathcal{G}})$. For finite $Y$ under log loss, the corresponding smallest sufficient refinement is $\mathcal{F} \vee \sigma(p_{\mathcal{G}})$, where $p_{\mathcal{G}}(\cdot) = \mathbb{P}(Y \in \cdot \mid \mathcal{G})$.*

*Proof.* The action $a^\star_{\mathcal{G}}$ is measurable with respect to $\mathcal{F} \vee \sigma(a^\star_{\mathcal{G}})$, so this refinement attains $R_L(\mathcal{G})$. Let $\mathcal{H}$ be any intermediate sigma-algebra with $R_L(\mathcal{H}) = R_L(\mathcal{G})$. Since $\mathcal{H} \subseteq \mathcal{G}$ and the $\mathcal{G}$-Bayes action is almost surely unique, Theorem J.1 implies that $a^\star_{\mathcal{G}}$ has an $\mathcal{H}$-measurable version. Therefore $\sigma(a^\star_{\mathcal{G}}) \subseteq \mathcal{H}$ up to null sets, and because $\mathcal{F} \subseteq \mathcal{H}$,

$$\mathcal{F} \vee \sigma(a^\star_{\mathcal{G}}) \subseteq \mathcal{H}$$

up to null sets. Under log loss, the Bayes action is the conditional law $p_{\mathcal{G}}$, giving the stated form. □

**Proposition J.7** (Finite squared-loss split identity)**.** *Let $B = B_0 \cup B_1$ be a disjoint split of a finite sample set. With empirical means $\hat{\mu}_B, \hat{\mu}_{B_0}, \hat{\mu}_{B_1}$ and* SSE *as in Section 6,*

$$\mathrm{SSE}(B) - \mathrm{SSE}(B_0) - \mathrm{SSE}(B_1) = |B_0|\,\|\hat{\mu}_{B_0} - \hat{\mu}_B\|_2^2 + |B_1|\,\|\hat{\mu}_{B_1} - \hat{\mu}_B\|_2^2\,.$$

*Proof.* For each child $B_b$,

$$\begin{aligned}
\sum_{j \in B_b} \|y_j - \hat{\mu}_B\|_2^2 &= \sum_{j \in B_b} \|y_j - \hat{\mu}_{B_b} + \hat{\mu}_{B_b} - \hat{\mu}_B\|_2^2 \\
&= \sum_{j \in B_b} \|y_j - \hat{\mu}_{B_b}\|_2^2 + |B_b|\,\|\hat{\mu}_{B_b} - \hat{\mu}_B\|_2^2\,,
\end{aligned}$$

because

$$\sum_{j \in B_b} (y_j - \hat{\mu}_{B_b}) = 0.$$

Summing over $b \in \{0, 1\}$ gives the result. □

# K DGM Algorithm and Projection-Bridge Proofs

This appendix combines elementary finite graph/partition arguments with standard concentration and linear-algebra tools: Hoeffding sample-split validation bounds, adaptive-holdout caveats, nearest-neighbor indexing costs, Moore-Penrose projections, and ridge/Tikhonov least squares [Hoe63, DGL96, DFH+15b, DFH+15a, IM98, JDJ19, Pen55, TA77, HK70].

**Theorem K.1** (Anchor edge separation, formal version of Theorem 8.5)**.** *Let $a_i, a_j \in \mathbb{R}^d$ with $a_i \neq a_j$. Define*

$$u = \frac{a_i - a_j}{\|a_i - a_j\|_2}, \qquad b = \frac{1}{2} u^\top (a_i + a_j).$$

*Then*

$$u^\top a_i - b = \frac{1}{2} \|a_i - a_j\|_2, \qquad u^\top a_j - b = -\frac{1}{2} \|a_i - a_j\|_2.$$

*Proof.* Compute

$$\begin{aligned} u^\top a_i - b &= u^\top a_i - \frac{1}{2} u^\top a_i - \frac{1}{2} u^\top a_j \\ &= \frac{1}{2} u^\top (a_i - a_j) \\ &= \frac{1}{2} \|a_i - a_j\|_2. \end{aligned}$$

Similarly,

$$\begin{aligned} u^\top a_j - b &= u^\top a_j - \frac{1}{2} u^\top a_i - \frac{1}{2} u^\top a_j \\ &= -\frac{1}{2} u^\top (a_i - a_j) \\ &= -\frac{1}{2} \|a_i - a_j\|_2. \end{aligned}$$

□

The construction is used only for separated anchors. In implementations, proposed edges with $\|a_i - a_j\|_2 \leq \eta_{\text{anchor}}$ are skipped or replaced by a fallback distinction, so the normalized direction is never formed from duplicate or numerically indistinguishable anchors.

**Theorem K.2** (DGM graph generates a finite edge-skeleton information structure, formal version of Theorem 8.6)**.** *Let $S$ be a finite set of binary generators $g_s : \mathsf{H} \to \{0, 1\}$. Define*

$$\sigma_S(h) = \big(g_s(h)\big)_{s \in S}.$$

*The relation $h \sim_S h'$ iff $\sigma_S(h) = \sigma_S(h')$ is an equivalence relation. Its nonempty equivalence classes form a finite edge-skeleton partition $\mathcal{P}_S^G$ of $\mathsf{H}$. If a new generator $g$ is added, then*

$$\mathcal{P}_{S \cup \{g\}}^G = \mathcal{P}_S^G \vee \sigma(g),$$

*where the right side denotes cutting each atom of $\mathcal{P}_S^G$ by $g^{-1}(1)$ and $g^{-1}(0)$ and keeping nonempty pieces.*

*Proof.* Equality of signatures is reflexive, symmetric, and transitive, so $\sim_S$ is an equivalence relation. Equivalence classes are disjoint, nonempty, and cover $\mathsf{H}$, hence they form a partition. Since $S$ is finite, there are at most $2^{|S|}$ signatures, so the partition is finite.

For the update, two points have the same signature under $S \cup \{g\}$ exactly when they have the same old $S$-signature and the same value of $g$. Therefore each new equivalence class is an old atom intersected with either $g^{-1}(1)$ or $g^{-1}(0)$, with empty intersections discarded. This is precisely $\mathcal{P}_S^G \vee \sigma(g)$. □

**Theorem K.3** (Anchor-based hard routing is graph-plus-anchor-order measurable, formal version of Theorem 8.7)**.** *Let $E_t$ be finite and let $a_1, \ldots, a_{N_t} \in \mathbb{R}^d$ be finite frozen anchors with deterministic tie-breaking. Let $\mathcal{F}_t^{\text{edge}} = \sigma(g_e : e \in E_t)$ and let $\mathcal{F}_t^{\text{anchor-order}}$ be generated by all pairwise anchor-distance comparison events*

$$\{h : \|h - a_i\|_2^2 \leq \|h - a_j\|_2^2\}.$$

*The exact hard-route selected concept index, defined as the nearest eligible anchor with fallback to the nearest anchor, is measurable with respect to $\mathcal{F}_t^{\text{edge}} \vee \mathcal{F}_t^{\text{anchor-order}}$.*

*Proof.* For each concept $j$, eligibility is an intersection of finitely many edge-bit events of the form

$$\{h : g_e(h) = 1\} \qquad \text{or} \qquad \{h : g_e(h) = 0\},$$

depending on $j$'s recorded side of edge $e$. Hence the eligible set for $j$ is $\mathcal{F}_t^{\text{edge}}$-measurable.

The anchor-order sigma-algebra determines the complete order of all anchors under the fixed tie-breaking rule. For any subset $R \subseteq \{1, \ldots, N_t\}$, the event that concept $j$ is the nearest anchor in $R$ is a finite intersection of pairwise anchor-comparison events, hence belongs to $\mathcal{F}_t^{\text{anchor-order}}$. The selected hard-route index is obtained by combining finitely many eligibility events with these nearest-in-subset events. Therefore the inverse image of each selected index is a finite union of intersections of sets from $\mathcal{F}_t^{\text{edge}}$ and $\mathcal{F}_t^{\text{anchor-order}}$, and belongs to their join. □

**Theorem K.4** (Soft routing approaches hard routing, formal version of Theorem 8.9)**.** *Let $N$ be a finite candidate set and let*

$$\alpha_j = \frac{\exp(-d_j/T)\chi_j}{\sum_{r \in N} \exp(-d_r/T)\chi_r}.$$

*If $j^\star_{\text{hard}} \notin N$, where $j^\star_{\text{hard}}$ is the exact hard-route selected concept, then this sparse soft read gives no guarantee for the omitted hard-route concept. Otherwise, assume $j^\star = j^\star_{\text{hard}} \in N$. For an eligible competitor set $E \subseteq N \setminus \{j^\star\}$, if $d_j - d_{j^\star} \geq \delta > 0$ and $\chi_j/\chi_{j^\star} \leq C_E < \infty$ for all $j \in E$, then*

$$\sum_{j \in E} \alpha_j \leq C_E \, |E| \exp(-\delta/T).$$

*Moreover, suppose $\log \chi_j$ contains a term*

$$\frac{\beta_e}{\sqrt{D_j}} \log \operatorname{sigmoid}\left(\frac{m_j}{\tau_e}\right)$$

*with $\beta_e > 0$ and finite $D_j \geq 1$, and candidate $j$ violates that edge with $m_j \leq -\delta_e < 0$. Then $\chi_j \leq \exp(-\beta_e \delta_e/(\sqrt{D_j}\tau_e))$.*

*For a wrong-side set $W \subseteq N$, suppose every $j \in W$ violates some incident structural edge whose weight is at least $\beta_{\min} > 0$, whose signed margin is at most $-\delta_e$, and whose incident degree is at*

*most $D_{\max}$. If at least one eligible reference candidate $r$ has $\chi_r \geq \chi_{\min} > 0$, and the distance score ratio between every $j \in W$ and $r$ is bounded by $C$, then the total wrong-side routing mass is at most*

$$\frac{C\,|N|}{\chi_{\min}} \exp\left(-\frac{\beta_{\min}\delta_e}{\sqrt{D_{\max}}\tau_e}\right).$$

*More generally, if*

$$\Delta_d = \max_{j \in W}(d_r - d_j)_+,$$

*then the same mass is at most*

$$\frac{|N|}{\chi_{\min}} \exp\left(\frac{\Delta_d}{T} - \frac{\beta_{\min}\delta_e}{\sqrt{D_{\max}}\tau_e}\right),$$

*and therefore vanishes along any joint limit satisfying*

$$\frac{\beta_{\min}\delta_e}{\sqrt{D_{\max}}\tau_e} - \frac{\Delta_d}{T} \to +\infty.$$

*Consequently, if $N \setminus \{j^\star\}$ is covered by eligible competitors satisfying the distance-margin and compatibility-ratio bounds and wrong-side competitors satisfying either wrong-side bound above, then $\alpha_{j^\star} \to 1$ under the corresponding temperature limit.*

*Proof.* If $j^\star_{\text{hard}} \notin N$, then the soft normalization assigns weight only to candidates in $N$ and the omitted hard-route concept has no route to receive weight. This is the candidate-recall caveat.

For the eligible-competitor statement, the denominator is at least $\exp(-d_{j^\star}/T)\chi_{j^\star}$, so

$$\begin{aligned}\sum_{j \in E} \alpha_j &\leq \sum_{j \in E} \frac{\exp(-d_j/T)\chi_j}{\exp(-d_{j^\star}/T)\chi_{j^\star}} \\ &\leq C_E \sum_{j \in E} \exp(-(d_j - d_{j^\star})/T) \leq C_E\,|E| \exp(-\delta/T).\end{aligned}$$

For an edge violation, set $a = \delta_e/\tau_e > 0$. Since

$$\text{sigmoid}(-a) = \frac{1}{1 + \exp(a)} \leq \exp(-a),$$

the corresponding log-compatibility contribution is at most $-\beta_e\delta_e/(\sqrt{D_j}\tau_e)$, and therefore $\chi_j \leq \exp(-\beta_e\delta_e/(\sqrt{D_j}\tau_e))$. If $W$ is the wrong-side set and $r$ is an eligible candidate whose compatibility satisfies $\chi_r \geq \chi_{\min}$, the uniform wrong-side assumptions give, for every $j \in W$,

$$\chi_j \leq \exp\left(-\frac{\beta_{\min}\delta_e}{\sqrt{D_{\max}}\tau_e}\right).$$

Combining this with the assumed distance-score ratio bound gives

$$\begin{aligned}\sum_{j \in W} \alpha_j &\leq \sum_{j \in W} \frac{C}{\chi_{\min}} \exp\left(-\frac{\beta_{\min}\delta_e}{\sqrt{D_{\max}}\tau_e}\right) \\ &\leq \frac{C\,|N|}{\chi_{\min}} \exp\left(-\frac{\beta_{\min}\delta_e}{\sqrt{D_{\max}}\tau_e}\right).\end{aligned}$$

Without a uniform distance-score ratio, use

$$\frac{\exp(-d_j/T)}{\exp(-d_r/T)} = \exp\left(\frac{d_r - d_j}{T}\right) \leq \exp(\Delta_d/T),$$

which gives the joint-limit bound and the stated convergence condition. □

**Theorem K.5** (Refine-or-repair objective descent, formal version of Theorem 8.11)**.** *Let*

$$J_{\mathcal{B}_t^{\text{score}}}(\mathcal{S}) = \widehat{R}(\mathcal{S}; \mathcal{B}_t^{\text{score}}) + \lambda_{\text{concept}} N_{\text{concept}}(\mathcal{S}) + \lambda_{\text{edge}} |E(\mathcal{S})|$$

*with nonnegative penalties on a fixed scoring buffer, where $\lambda_{\text{concept}}$ includes the anchored concept and the anchor-order bookkeeping induced by creating it. If a repair step is committed only after the guarded test*

$$\widehat{R}(\mathcal{S}_{t+1}; \mathcal{B}_t^{\text{score}}) \leq \widehat{R}(\mathcal{S}_t; \mathcal{B}_t^{\text{score}}),$$

*and leaves anchors, edges, and concept count unchanged, then $J_{\mathcal{B}_t^{\text{score}}}$ does not increase. If a refinement creates one concept and actual edge set $E_{\text{new}}$ and is accepted only when*

$$\widehat{\Delta}_{\text{refine}} > \max\{\widehat{\Delta}_{\text{repair}}, 0\} + \tau + 2\epsilon_m,$$

*where $\widehat{\Delta}_{\text{repair}} \geq 0$ is the empirical repair gain and*

$$\widehat{\Delta}_{\text{refine}} = \widehat{R}(\mathcal{S}_t; \mathcal{B}_t^{\text{score}}) - \widehat{R}(\mathcal{S}_{t+1}; \mathcal{B}_t^{\text{score}}) - \lambda_{\text{concept}} - \lambda_{\text{edge}} |E_{\text{new}}|,$$

*then*

$$J_{\mathcal{B}_t^{\text{score}}}(\mathcal{S}_{t+1}) < J_{\mathcal{B}_t^{\text{score}}}(\mathcal{S}_t) - \widehat{\Delta}_{\text{repair}} - \tau - 2\epsilon_m.$$

*In particular, $J_{\mathcal{B}_t^{\text{score}}}$ decreases by more than $\tau + 2\epsilon_m$.*

*Proof.* For repair, $N_{\text{concept}}$ and $|E|$ are unchanged. The empirical-risk term on $\mathcal{B}_t^{\text{score}}$ is no larger by the guard, so $J_{\mathcal{B}_t^{\text{score}}}$ does not increase. The identity candidate is always feasible, so the guarded rule can decline harmful centroid or memory movement instead of committing it.

For refinement,

$$\begin{aligned} J_{\mathcal{B}_t^{\text{score}}}(\mathcal{S}_t) - J_{\mathcal{B}_t^{\text{score}}}(\mathcal{S}_{t+1}) &= \widehat{R}(\mathcal{S}_t; \mathcal{B}_t^{\text{score}}) - \widehat{R}(\mathcal{S}_{t+1}; \mathcal{B}_t^{\text{score}}) - \lambda_{\text{concept}} - \lambda_{\text{edge}} |E_{\text{new}}| \\ &= \widehat{\Delta}_{\text{refine}} \\ &> \widehat{\Delta}_{\text{repair}} + \tau + 2\epsilon_m. \end{aligned}$$

Rearranging gives the claim. □

The theorem is local to the fixed scoring buffer used in its statement. If the scoring buffer changes over time, these inequalities alone do not define a common global descent potential.

**Theorem K.6** (Statistically safe adaptive refinement, formal version of Theorem 8.12)**.** *Assume losses lie in $[0, 1]$. Let $(\mathfrak{H}_t)$ be the filtration containing the past stream, current DGM state, and all proposal-buffer information available before scoring at time $t$. Let $\mathcal{C}_t$ be a finite candidate class predictable with respect to $\mathfrak{H}_t$, and let $\mathcal{B}_t^{\text{score}}$ contain $m_t$ fresh held-out samples, or samples not previously used to choose proposals or update the state, independent of $\mathfrak{H}_t$ conditional on the current scoring distribution. For candidate $g$, let $\widehat{G}_t(g)$ be the empirical raw risk decrease on $\mathcal{B}_t^{\text{score}}$ before complexity cost and let $G_t(g)$ be the corresponding population raw gain. Define*

$$\epsilon_t = \sqrt{\frac{\log(4t^2(|\mathcal{C}_t| + 1)/\delta)}{2m_t}}.$$

*Then, with probability at least $1-\delta$, every time $t$ and candidate $g \in \mathcal{C}_t$ satisfy*

$$\left|\widehat{G}_t(g) - G_t(g)\right| \le 2\epsilon_t.$$

*Consequently, if*

$$\widehat{G}_t(g) > \lambda \operatorname{cost}(g) + \tau + 2\epsilon_t,$$

*then on the same event*

$$G_t(g) > \lambda \operatorname{cost}(g) + \tau.$$

*Proof.* Condition on $\mathfrak{H}_t$. The candidate class is then fixed, and the scoring buffer is independent of the proposal mechanism and prior state-selection decisions by assumption. Apply Hoeffding's inequality to the empirical risk of the old state and to the empirical risk of each candidate-refined state. For any fixed state in this finite collection,

$$\mathbb{P}\left(\left|\widehat{R} - R\right| > \epsilon\right) \le 2\exp(-2m\epsilon^2).$$

With $m = m_t$ and $\epsilon = \epsilon_t$, the failure probability at time $t$ is at most $\delta/(2t^2)$ after a union bound over the old state and the $|\mathcal{C}_t|$ candidate states. Since $\sum_{t\ge1} t^{-2} < 2$, the displayed constant $4t^2$ gives total failure probability at most $\delta$ over all times. On this event, each raw gain is a difference of two risks, so empirical and population raw gain differ by at most $2\epsilon_t$. The implication follows by subtracting this deviation from the empirical raw-gain lower bound. □

**Corollary K.7** (Bounded language-model refinement score, formal version of Corollary 8.13)**.** *For language modeling, let*

$$\ell_{\text{clip}}(x_{\le t}, x_{t+1}) = \frac{1}{L_{\max}} \min\{-\log p(x_{t+1} \mid x_{\le t}), L_{\max}\}$$

*for a fixed $L_{\max} > 0$. If the scoring buffer, empirical raw gain, and population raw gain in Theorem K.6 are computed using $\ell_{\text{clip}}$, then the theorem applies to language-model refinement decisions made with this clipped score. In particular, an accepted refinement has positive clipped population gain after paying complexity cost and margin $\tau$ with probability at least $1-\delta$.*

*Proof.* The clipped score satisfies $0 \le \ell_{\text{clip}} \le 1$. Substituting this bounded loss into Theorem K.6 gives the claim directly. The statement is only about the clipped score; raw negative log likelihood is unbounded and would require a separate concentration assumption. □

**Theorem K.8** (Anchor-stable DGM information structure, formal version of Theorem 8.14)**.** *Let*

$$\mathcal{F}_t^{\text{DGM}} = \sigma(g_e : e \in E_t) \vee \sigma\Big(\{h : \|h - a_i\|_2^2 \le \|h - a_j\|_2^2\} : 1 \le i, j \le N_t\Big).$$

*Suppose every edge generator $g_e(h) = \mathbf{1}\{u_e^\top h > b_e\}$ is computed from frozen endpoint anchors $a_i, a_j$. Any repair step that changes only centroids $c_j$, local memories $M_j$, and counts $n_j$, while keeping anchors and edges fixed, leaves $\mathcal{F}_t^{\text{DGM}}$ unchanged. If a refinement adds a new anchor and new edge generators, then $\mathcal{F}_{t+1}^{\text{DGM}}$ is $\mathcal{F}_t^{\text{DGM}}$ joined with the new anchor-order events and the new edge generators.*

*Proof.* For an edge $e = (i, j)$, both

$$u_e = \frac{a_i - a_j}{\|a_i - a_j\|_2}, \qquad b_e = \frac{1}{2} u_e^\top (a_i + a_j)$$

are deterministic functions of the frozen anchors. A repair step does not change these anchors, so it does not change $u_e$, $b_e$, or $g_e$. It also does not change any anchor-distance comparison event because all anchors are fixed. Hence both sigma-algebras in the join defining $\mathcal{F}_t^{\mathrm{DGM}}$ are unchanged.

If a refinement adds anchor $a_{\mathrm{new}}$ and edge generators $E_{\mathrm{new}}$, the new edge sigma-algebra is $\sigma(g_e : e \in E_t) \vee \sigma(g_e : e \in E_{\mathrm{new}})$, and the new anchor-order sigma-algebra is the old anchor-order sigma-algebra joined with the pairwise comparisons involving $a_{\mathrm{new}}$. This is exactly the stated join. □

**Corollary K.9** (Finite number of accepted refinements, formal version of Corollary 8.15)**.** *Let $\Phi$ be a common potential with $\Phi(\mathcal{S}) \geq 0$ for all reachable states. If each accepted refinement decreases $\Phi$ by at least $\tau > 0$, then the number of accepted refinements is at most $\Phi(\mathcal{S}_0)/\tau$.*

*Proof.* After $m$ accepted refinements,

$$\Phi(\mathcal{S}_m) \leq \Phi(\mathcal{S}_0) - m\tau.$$

Since $\Phi(\mathcal{S}_m) \geq 0$, we have $m \leq \Phi(\mathcal{S}_0)/\tau$. □

**Proposition K.10** (Trees as generalized hard-route DGMs, formal version of Proposition F.1)**.** *Let $\mathcal{T}$ be a binary decision tree whose internal nodes compute binary distinctions $g_\nu(h) \in \{0, 1\}$ and whose leaves have predictors $M_\ell$. Construct a generalized hard-route DGM with one concept $c_\ell$ and memory $M_\ell$ for each leaf $\ell$, where the generalized model permits arbitrary finite binary eligibility constraints in addition to pairwise distinction edges. For each leaf, add hard eligibility constraints equal to the signed distinctions along the root-to-leaf path. If the generalized hard route selects the unique eligible leaf concept, then its prediction equals the tree prediction for every $h$.*

*Proof.* For any input $h$, the tree follows exactly one root-to-leaf path. The leaf reached by the tree is the unique leaf whose path constraints are all satisfied by $h$. By construction, the corresponding generalized hard-route concept has exactly those eligibility constraints, and all other leaf concepts violate at least one path constraint at the first node where their path differs from the tree path. Therefore the generalized hard route selects the same leaf and applies the same memory $M_\ell$. □

**Theorem K.11** (DGM data-structure bound, formal version of Theorem F.2)**.** *Assume DGM has $N_t$ concepts in $\mathbb{R}^d$, exact centroid and anchor retrieval, candidate set $N(h)$, selected incident edge-gate count $Q(h) = \sum_{j \in N(h)} |\mathrm{Inc}_t(j)|$, and local-memory evaluation cost $C_{\mathrm{local}}$. Then one prediction costs $O(N_t d + Q(h)d + |N(h)|\, d + C_{\mathrm{local}})$ for dense linear edge gates. One observation that repairs a selected concept costs this plus the guarded local repair scoring cost. One observation that creates a new anchor-centroid pair and $q$ guarded distinction edges costs an additional $O(d + qd)$ plus anchor-order query bookkeeping. If each concept stores an anchor, a centroid, and a sparse categorical memory with average support $\bar{s}$, and each edge stores a linear distinction in $\mathbb{R}^d$, then the runtime state uses $O(N_t(2d + \bar{s}) + |E_t|\, d)$ memory.*

*Proof.* A distance computation between $h \in \mathbb{R}^d$ and one concept center costs $O(d)$. Exact centroid and anchor retrieval over $N_t$ concepts therefore costs

$$O(N_t d).$$

Graph-neighbor expansion has cost proportional to the incident lists touched and is lower order relative to dense edge-gate evaluation. After the candidate set $N(h)$ is selected, evaluating the incident linear edge gates costs $O(Q(h)d)$. Computing sparse routing weights, distances within the selected set, and evaluating selected local memories costs

$$O(|N(h)|\, d + C_{\text{local}}).$$

Thus prediction costs

$$O(N_t d + Q(h)d + |N(h)|\, d + C_{\text{local}}).$$

Observation begins with the same retrieval computation. If it repairs a selected concept, it adds the cost of evaluating and scoring the proposed local repair candidates on the scoring buffer. If it creates a new anchor-centroid pair, storing the pair costs $O(d)$. For each new edge, computing and storing the linear distinction vector costs $O(d)$, so $q$ edges cost

$$O(qd).$$

The total additional vector-update cost for refinement is therefore $O(d+qd)$, plus whatever indexing or comparison bookkeeping is used to support anchor-order queries.

For memory, each concept stores $a_j, c_j \in \mathbb{R}^d$ and a sparse categorical memory of average support $\bar{s}$, giving

$$O(N_t(2d + \bar{s})).$$

Each edge stores one distinction vector and threshold, giving

$$O(|E_t|\, d).$$

Adding the two terms proves the claimed bound. □

**Theorem K.12** (DGM layer cost, formal version of Theorem F.3)**.** *Consider a DGM adapter extension with hidden dimension $d$, query dimension $d_q$, local rank $r$, candidate count $|N|$, selected incident edge-gate count $Q_N$, and concept-bank query cost $C_{\text{ret}}(N_t, d_q)$. For one token, the read overhead is*

$$O(dd_q + C_{\text{ret}}(N_t, d_q) + Q_N d_q + |N|\, dr).$$

*If the write path is detached and uses rank-one local repair, the write overhead is*

$$O(dd_q + C_{\text{ret}}(N_t, d_q) + Q_N d_q + |N|\, (d_q + dr)).$$

*For a block of length $L$, backpropagation through the slow parameters does not require storing the full DGM state history $\mathcal{S}_1, \ldots, \mathcal{S}_L$.*

*Proof.* For a token hidden state $h \in \mathbb{R}^d$, the query computation

$$q = Qh$$

costs $O(dd_q)$. The retrieval cost is $C_{\text{ret}}(N_t, d_q)$ by definition. Evaluating selected incident dense edge gates costs $O(Q_N d_q)$.

For a selected concept $j$, the rank-$r$ adapter read is

$$W_j K h.$$

Multiplying one selected $W_j \in \mathbb{R}^{d\times r}$ by a rank-$r$ key costs $O(dr)$. Therefore $|N|$ selected adapters cost

$$O(|N|\, dr).$$

The routing weights add lower-order top-$k$ normalization cost, absorbed into the same bound. This proves the read overhead.

The write path first computes the same query, retrieval, and edge gates. It then updates selected concept statistics and selected local memories. Concept bookkeeping costs $O(d_q)$ per selected concept. A rank-one local repair of a rank-$r$ or low-rank sufficient-statistic memory costs $O(dr)$ per selected memory. Hence the write overhead is

$$O(dd_q + C_{\mathrm{ret}}(N_t, d_q) + Q_N d_q + |N|\,(d_q + dr)).$$

Finally, the update rule is applied as

$$\mathcal{S}_{t+1} = \mathrm{stopgrad}(\mathrm{DGMObserve}(\mathrm{stopgrad}(\mathcal{S}_t), \mathrm{stopgrad}(h_t), x_{t+1}))\,.$$

Thus the computational graph for the loss contains the selected read computation, but not the chain of state-update maps from $\mathcal{S}_1$ through $\mathcal{S}_L$ or the write-time hidden states used to mutate the fast state. Therefore full DGM state history is not required for backpropagation through the slow parameters. □

**Theorem K.13** (One-hot memory is partition-measurable, formal version of Theorem H.1)**.** *Let $\mathcal{P} = \{B_1, \ldots, B_n\}$ be a finite partition and let $\phi_{\mathcal{P}}(\omega) = e_i$ for $\omega \in B_i$. For every $W \in \mathbb{R}^{m\times n}$, the map $f_W(\omega) = W\phi_{\mathcal{P}}(\omega)$ is $\mathcal{P}$-measurable. Conversely, every $\mathcal{P}$-measurable map $f : \Omega \to \mathbb{R}^m$ is equal to $f_W$ for some $W \in \mathbb{R}^{m\times n}$.*

*Proof.* If $\omega, \omega' \in B_i$, then

$$\phi_{\mathcal{P}}(\omega) = \phi_{\mathcal{P}}(\omega') = e_i.$$

Thus

$$f_W(\omega) = We_i = f_W(\omega'),$$

so $f_W$ is constant on each atom and is $\mathcal{P}$-measurable.

Conversely, if $f$ is $\mathcal{P}$-measurable, it is constant on each $B_i$. Let $w_i$ be this constant value on $B_i$, and define

$$W = [w_1, \ldots, w_n].$$

Then for $\omega \in B_i$,

$$W\phi_{\mathcal{P}}(\omega) = We_i = w_i = f(\omega).$$

□

**Theorem K.14** (CPM conflict equals missing distinction, formal version of Theorem H.2)**.** *Let $\mathcal{P} = \{B_1, \ldots, B_n\}$ and let $\omega, \omega' \in B_i$. Suppose $v(\omega) \neq v(\omega')$. Let $k = \phi_{\mathcal{P}}(\omega) = \phi_{\mathcal{P}}(\omega') = e_i$. If a memory $W$ has already committed $We_i = v(\omega)$, then the evidence $We_i = v(\omega')$ has innovation $z = 0$ relative to the old key span and residual $e \neq 0$.*

*Proof.* Here the stored-key matrix $K$ is oriented with stored keys as columns, so $KK^\dagger$ is the orthogonal projector onto their column span. Since $\omega, \omega' \in B_i$,

$$\phi_{\mathcal{P}}(\omega) = \phi_{\mathcal{P}}(\omega') = e_i.$$

The old key span contains $e_i$. Therefore the innovation of the new key $k = e_i$ relative to the old key matrix $K = e_i$ is

$$z = (I - KK^\dagger)k = (I - e_i e_i^\top)e_i = 0.$$

The new residual is

$$e = v(\omega') - We_i = v(\omega') - v(\omega).$$

Since $v(\omega') \neq v(\omega)$, we have $e \neq 0$. □