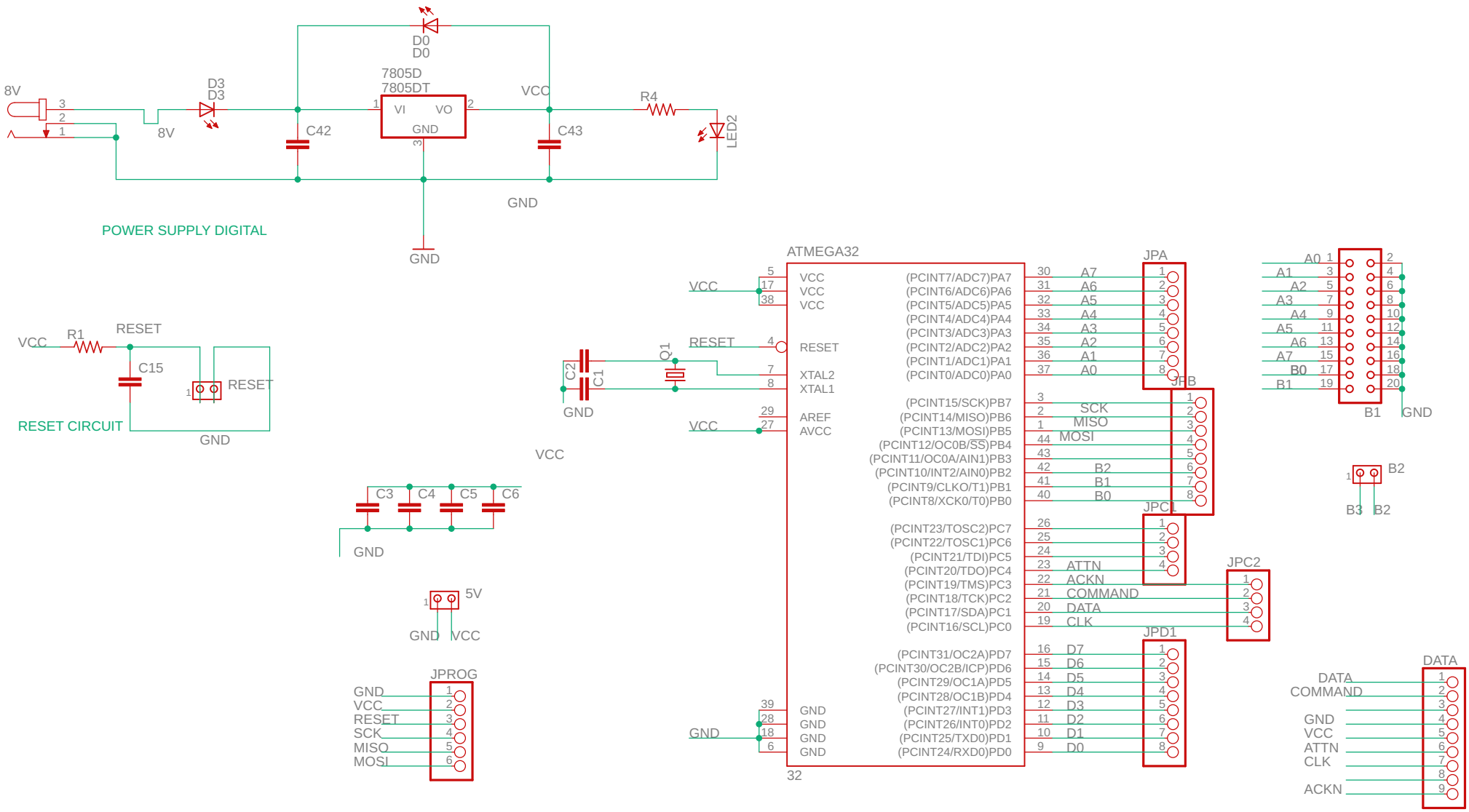
8V
D3
D3
8V
D0
D0
7805D
7805DT
VI
VO
GND
VCC
C42
C43
R4
LED2
GND
GND
POWER SUPPLY DIGITAL
VCC
R1
RESET
C15
RESET
RESET CIRCUIT
GND
ATMEGA32
VCC
RESET
XTAL2
XTAL1
AREF
AVCC
GND
Q1
C2
C1
GND
VCC
C3
C4
C5
C6
GND
5V
GND
VCC
JPROG
GND
VCC
RESET
SCK
MISO
MOSI
(PCINT7/ADC7)PA7
(PCINT6/ADC6)PA6
(PCINT5/ADC5)PA5
(PCINT4/ADC4)PA4
(PCINT3/ADC3)PA3
(PCINT2/ADC2)PA2
(PCINT1/ADC1)PA1
(PCINT0/ADC0)PA0
(PCINT15/SCK)PB7
(PCINT14/MISO)PB6
(PCINT13/MOSI)PB5
(PCINT12/OC0B/SS)PB4
(PCINT11/OC0A/AIN1)PB3
(PCINT10/INT2/AIN0)PB2
(PCINT9/CLKO/T1)PB1
(PCINT8/XCK0/T0)PB0
(PCINT23/TOSC2)PC7
(PCINT22/TOSC1)PC6
(PCINT21/TDI)PC5
(PCINT20/TDO)PC4
(PCINT19/TMS)PC3
(PCINT18/TCK)PC2
(PCINT17/SDA)PC1
(PCINT16/SCL)PC0
(PCINT31/OC2A)PD7
(PCINT30/OC2B/ICP)PD6
(PCINT29/OC1A)PD5
(PCINT28/OC1B)PD4
(PCINT27/INT1)PD3
(PCINT26/INT0)PD2
(PCINT25/TXD0)PD1
(PCINT24/RXD0)PD0
GND
GND
GND
GND
32
JPA
JPB
JPC1
JPC2
JPD1
ATTN
ACKN
COMMAND
DATA
CLK
B1
B2
B3
DATA
COMMAND
GND
VCC
ATTN
CLK
ACKN