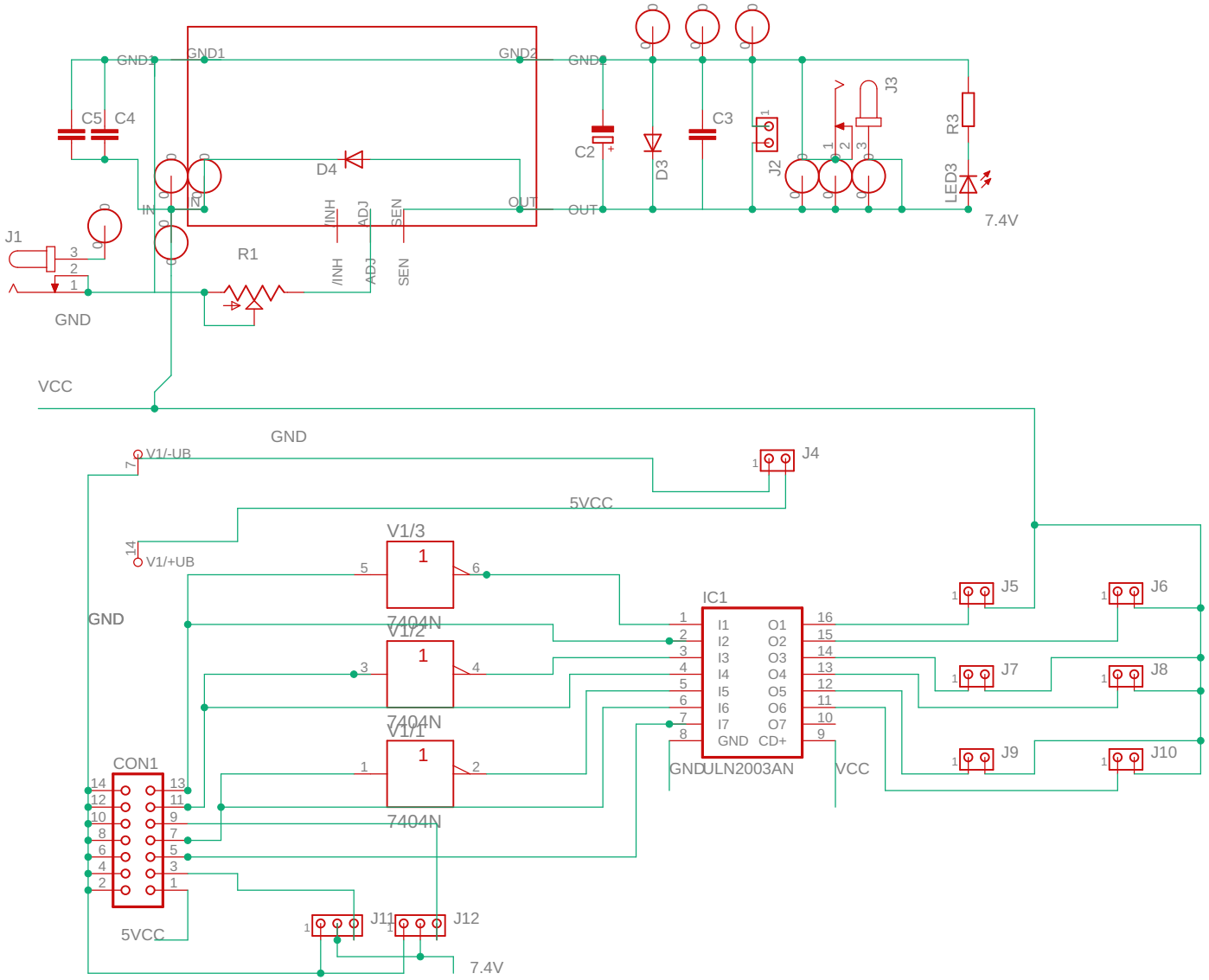
GND1
GND2
C5
C4
D4
IN
OUT
/INH
ADJ
SEN
C2
D3
C3
J2
J3
R3
LED3
7.4V
J1
R1
GND
VCC
V1/-UB
V1/+UB
J4
5VCC
V1/3
V1/2
V1/1
7404N
IC1
ULN2003AN
J5
J6
J7
J8
J9
J10
CON1
J11
J12