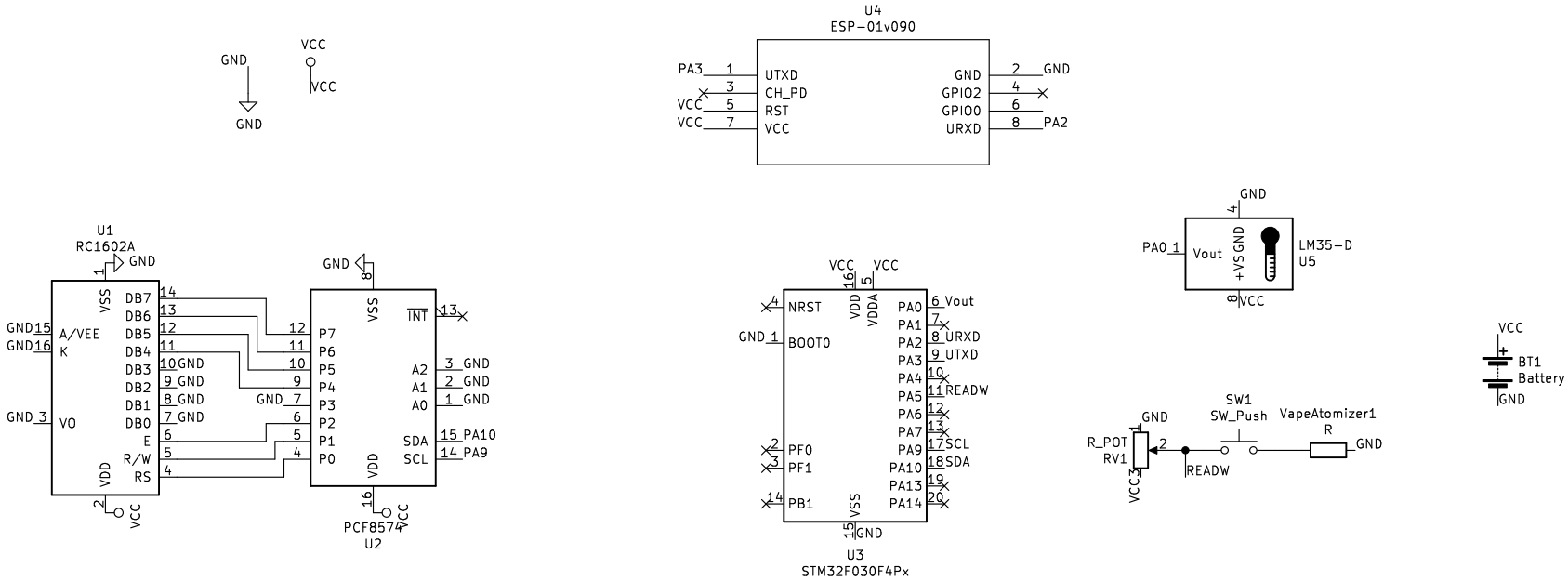

Sheet: /
File: VIVA.sch

Title: Virtual Integrated Vape

Size: A4	Date:	**Rev:**
KiCad E.D.A. kicad (5.0.1)-3		Id: 1/1