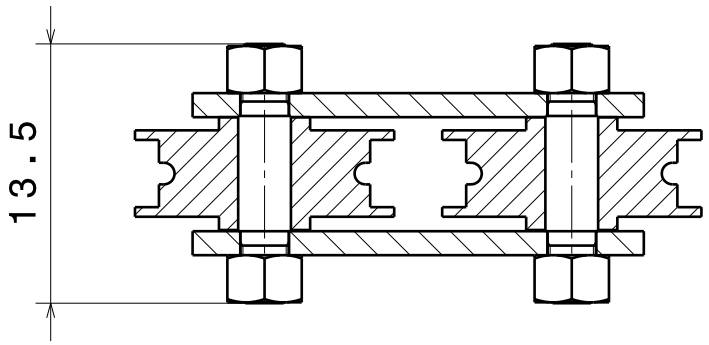

sezione A-A

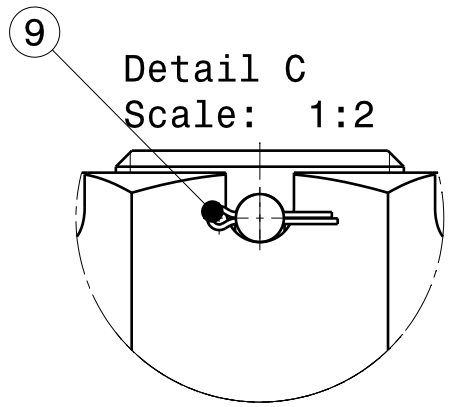

Detail C
Scale: 1:2

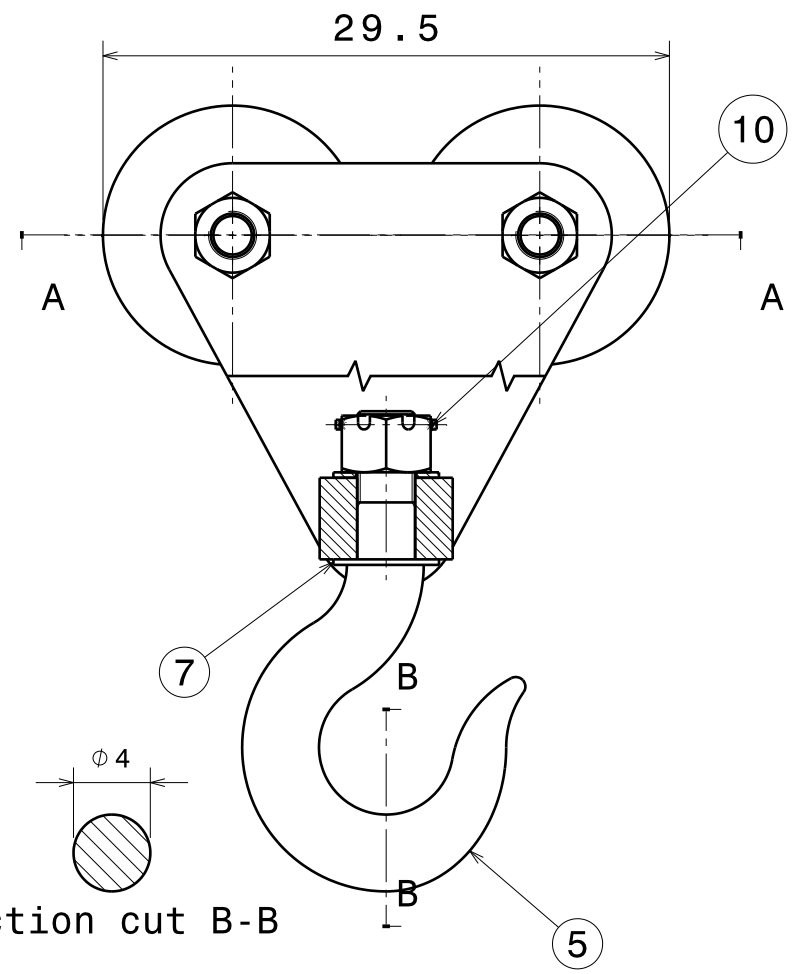

Section cut B-B

Vista Frontale

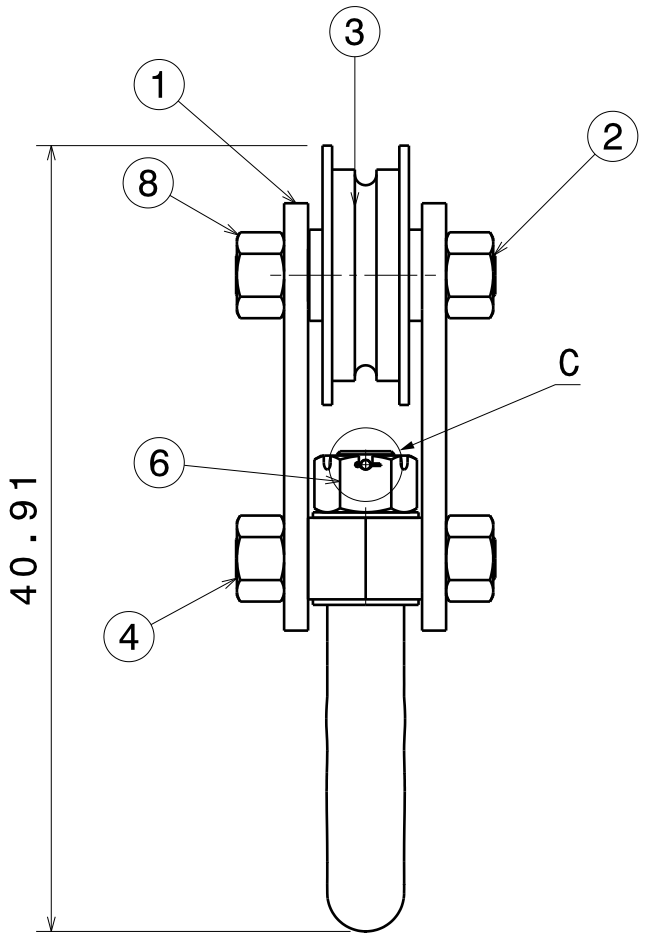

Vista da Sinistra

Bill of Material: PV2324_ES0400

Quantity	Part Number	Type	Nomenclature	MATERIALE
2	PV2324_ES04_01	Part	PLATE	
2	OV2324_ES04_03	Part	PULLEY PIN	Acciaio
2	PV2324_ES04_02	Part	PULLEY	Acciaio
1	PV2324_ES04_06	Part	HOOK TRUNION	Acciaio
1	PV2324_ES04_05	Part	HOOK	Acciaio
1	PV2324_ES04_04	Part	NUT LOCK PIN	Acciaio
2	ANSI B18.22.1 WASHER 3 STEEL PLAIN REGULAR TYPE A	Part		
6	ASME B18.2.2 NUT 2_1/2 UNC STEEL HEAVY HEXAGON	Part		
1	ASME B18.2.2 NUT 3 UNC STEEL HEAVY HEX SLOTTED	Part		
2	ASME B18.8.1 PIN 1/8 x 1 STEEL EXTENDED PRONG COTTER	Part		

nota: tutte le misure sono in inches

DESIGNED BY: Guendalina De Laurentis	DATE: 19/11/2023	Prototipazione Virtuale
CHECKED BY: XXX	DATE: XXX	
SIZE A3		Università di Napoli Federico II
SCALE 1:10	WEIGHT (kg) XXX	DRAWING NUMBER PV2324_ES04 — SHEET 1/2

This drawing is our property; it can't be reproduced or communicated without our written agreement.