Resistors and Bipolar Transistors

Anika Mahesh[1], **Elias Tuthill**[1] **and Henry Tejada Deras**[1]

[1]*Franklin W. Olin College of Engineering*

1. Bipolar Transistor Characteristics

1.1. Results

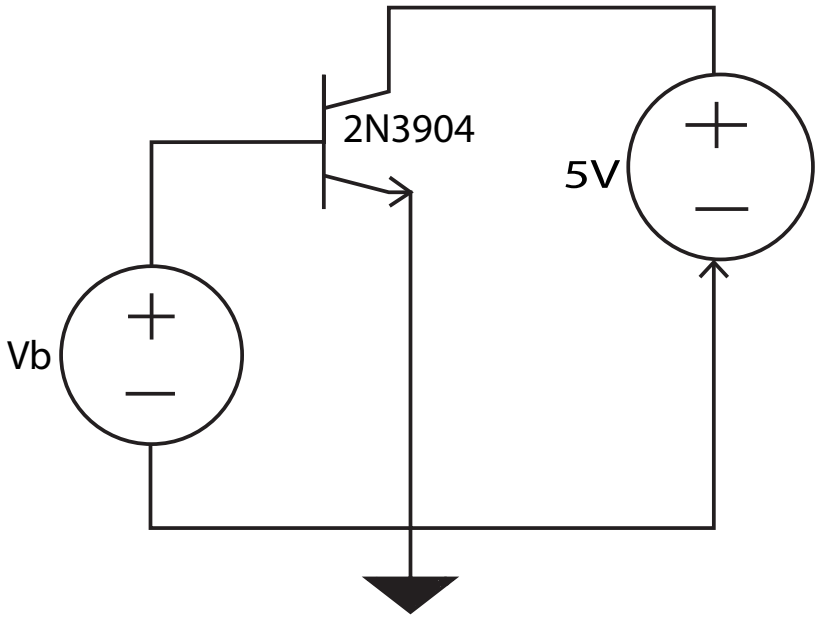

Figure 1. The schematic for the experimental setups used in Experiment 1.

1.2. Analysis

1.3. Discussion

2. Emitter-Degenerated Bipolar Characteristics

2.1. Results

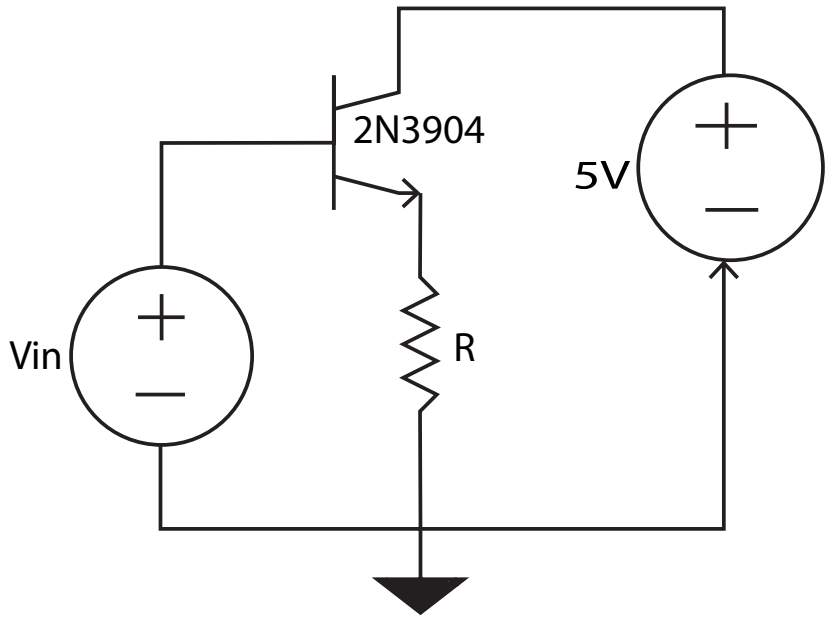

Figure 2. The schematic for the experimental setups used in Experiment 2.

2.2. Analysis

2.3. Discussion

3. Follower Voltage Transfer Characteristics

3.1. Results

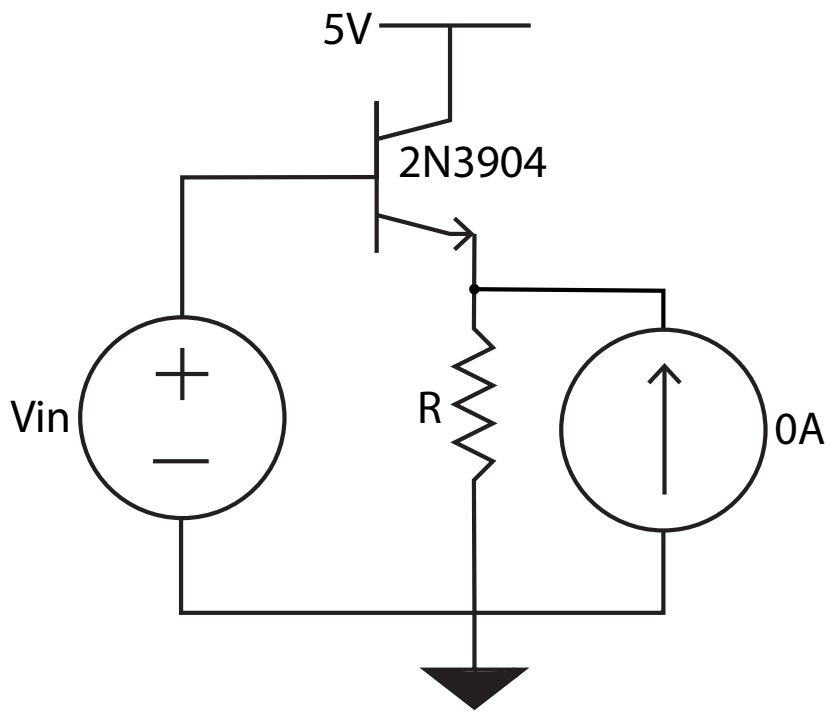

Figure 3. The schematic for the experimental setups used in Experiment 3.

3.2. Analysis

3.3. Discussion

4. Inverter Voltage Transfer Characteristics

4.1. Results

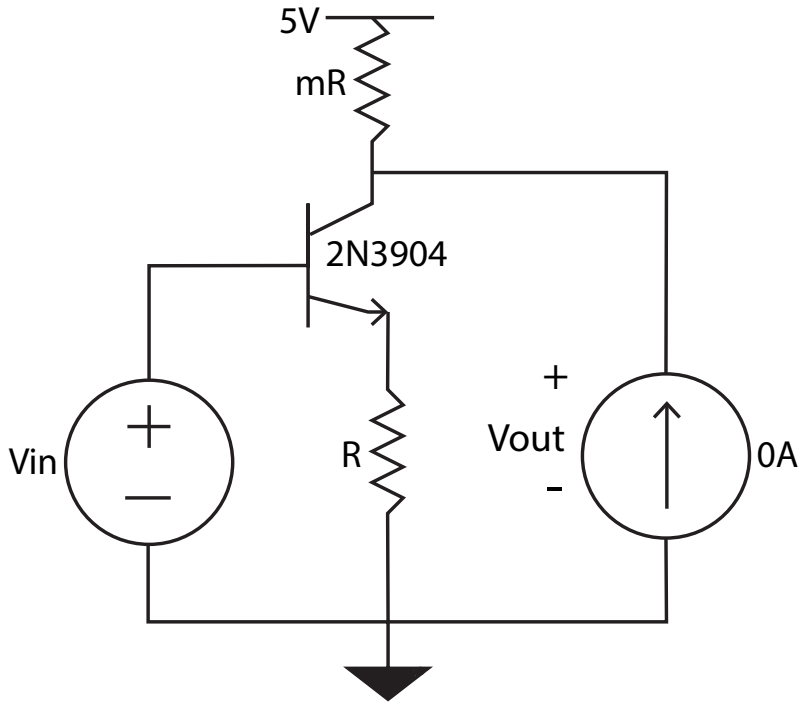

Figure 4. The schematic for the experimental setups used in Experiment 4.

4.2. Analysis

4.3. Discussion