Intro Microelectronic Circuits with Laboratory

The MOS Differential Pair

Henry Tejada Deras[1], **Anika Mahesh**[1] **and Elias Tuthill**[1]

[1] *Franklin W. Olin College of Engineering*

1. Differential Pair Current–Voltage Characteristics

1.1. Results

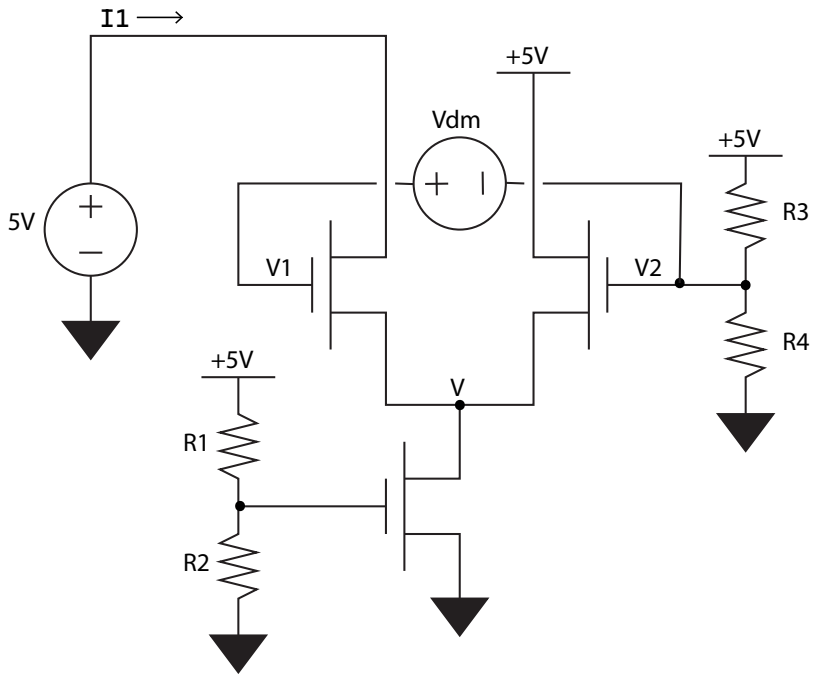

Figure 1. Experimental setup for the first part of Experiment 1.

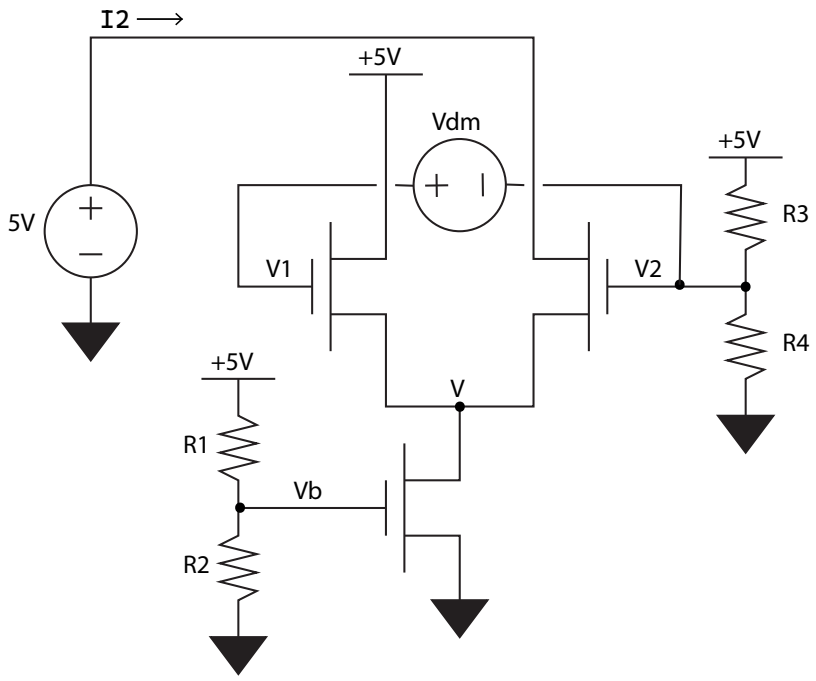

Figure 2. Experimental setup for the second part of Experiment 1.

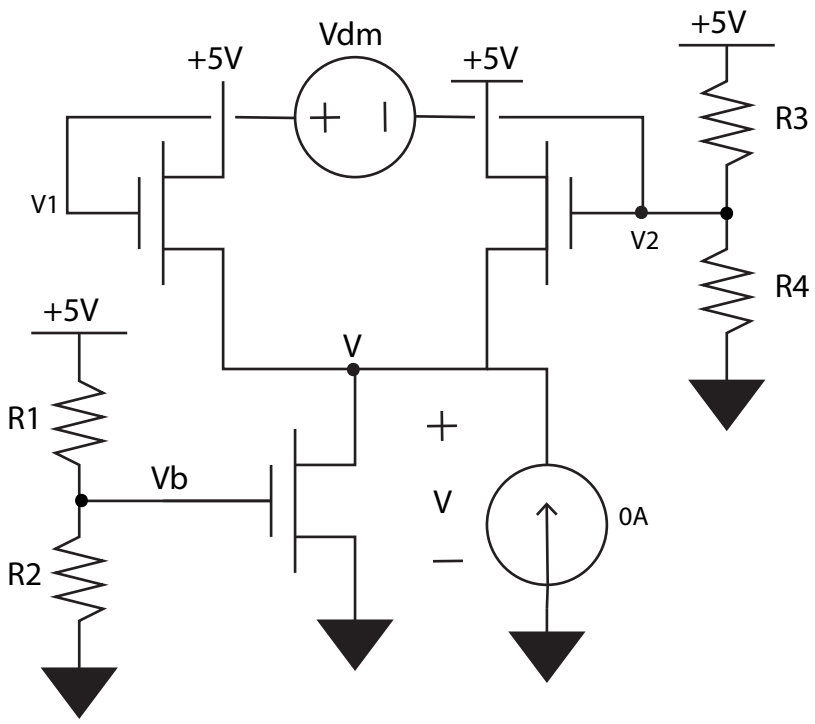

Figure 3. Experimental setup for the third part of Experiment 1.

1.2. Analysis

1.3. Discussion