A Current-Mirror Differential Amplifier

Henry Tejada Deras[1] **and Elias Tuthill**[1]

[1]*Franklin W. Olin College of Engineering*

1. Voltage Transfer Characteristics

1.1. Results

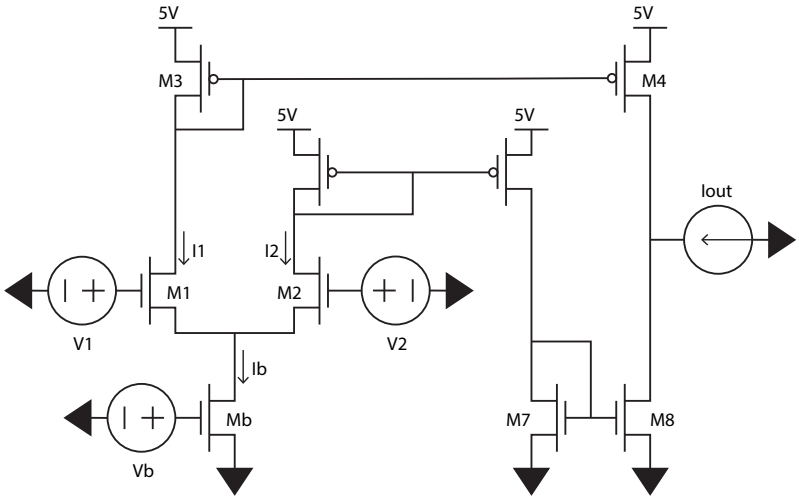

Figure 1. Schematic of the current-mirror differential amplifier used for Voltage Transfer Characteristic (VTC) measurements.

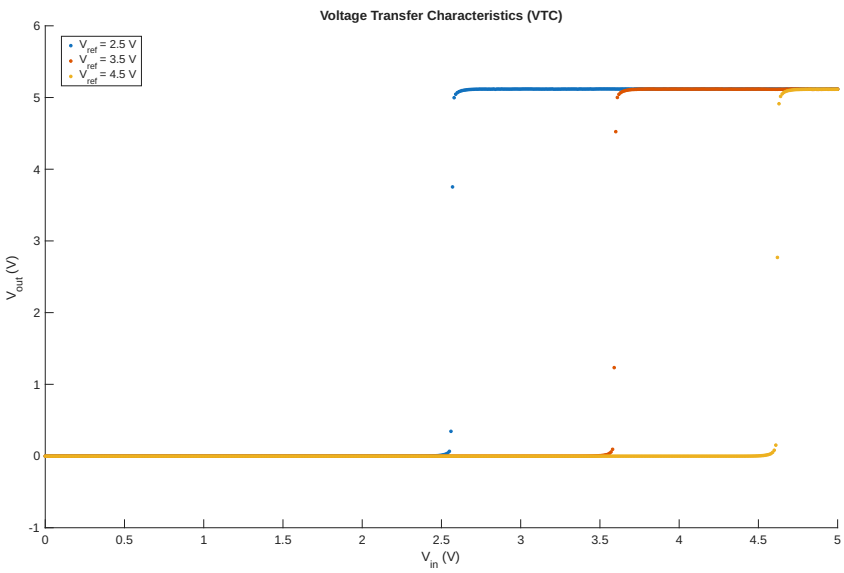

Figure 2. Voltage Transfer Characteristics (VTC) of the current-mirror differential amplifier. The plot shows the output voltage (V_{out}) versus the input voltage (V_{in}) for three different inverting input bias voltages: V_{ref} = 2.5 V, 3.5 V, and 4.5 V.

1.2. Analysis

The Voltage Transfer Characteristics (VTC) in Figure 2 show the relationship between the input voltage (V_{in}) and the output voltage (V_{out}) for three distinct inverting input reference voltages: V_{ref} = 2.5 V, 3.5 V, and 4.5 V. The plots show that the output remains near the lower rail until V_{in} approaches V_{ref}. As V_{in} crosses the V_{ref} threshold, V_{out} shows a sharp, transition up to the upper rail, meaning an extremely high voltage gain.

1.3. Discussion

Compared to the simple differential amplifier analyzed in Lab 6, this current-mirror differential amplifier shows a significantly larger, rail to rail output swing. Furthermore, the transition region is much steeper. This is a direct result of using an active current-mirror. The current

mirrors push and pull current into a high impedance output node, which allows the output voltage to swing much closer to the power supply rails while also boosting the differential mode voltage gain.

2. Transconductance, Output Resistance, and Gain

2.1. Results

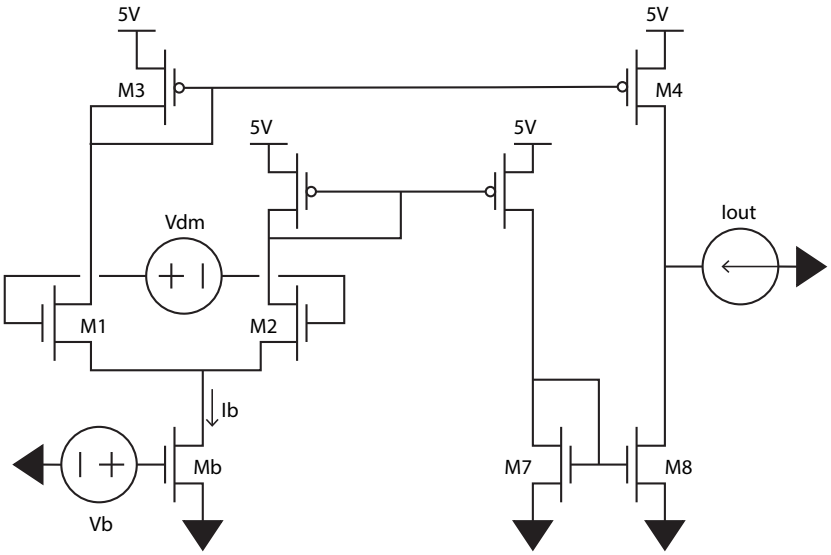

Figure 3. Schematic for differential-mode voltage gain measurement.

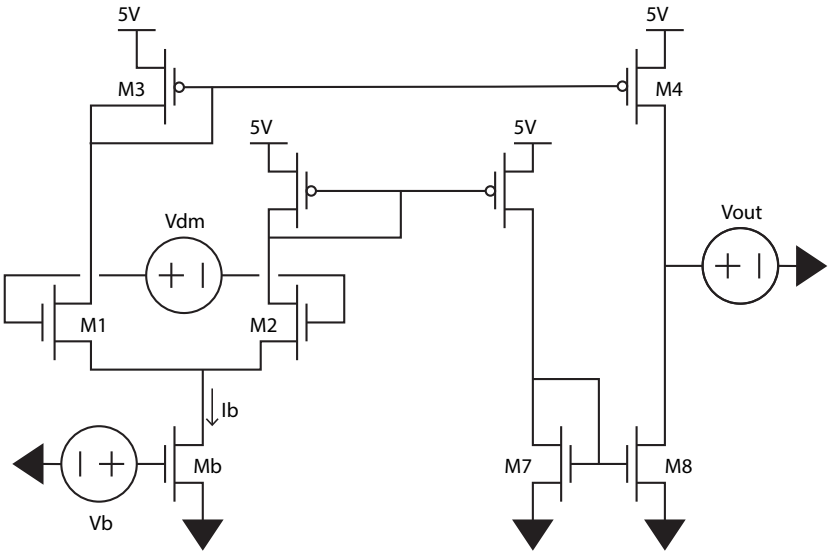

Figure 4. Schematic used for both incremental transconductance (g_m) and output resistance (r_{out}) measurements.

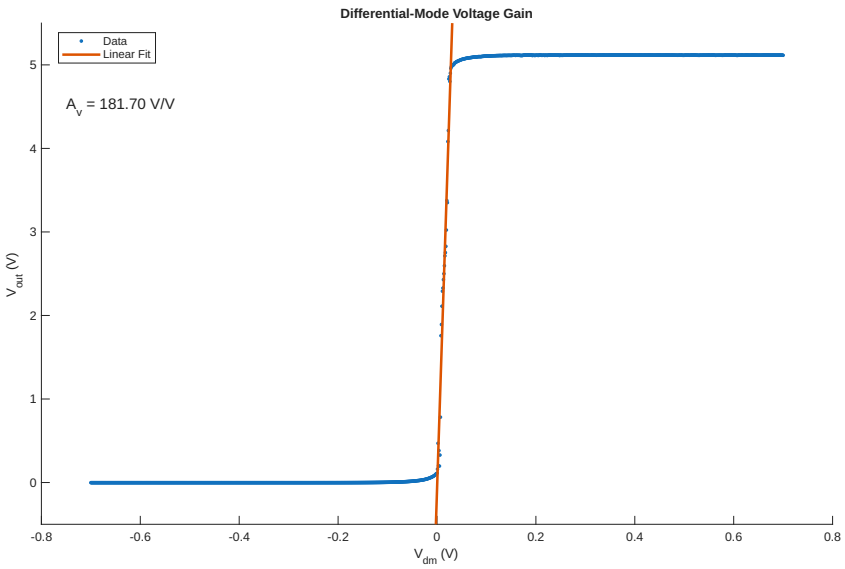

Figure 5. Differential-mode voltage gain measurement showing the output voltage (V_{out}) versus the differential input voltage (V_{dm}). A linear fit to the high-gain region gives a voltage gain of $A_v = 181.70$ V/V.

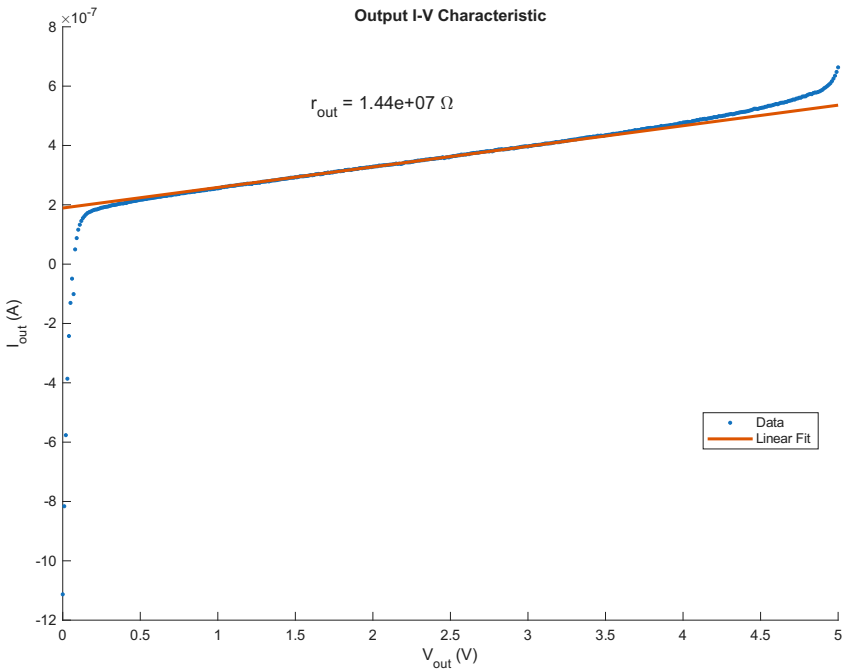

Figure 6. Output current-voltage characteristic curve showing I_{out} versus V_{out} with $V_{dm} = 0$ V. The inverse slope of the linear fit gives an incremental output resistance of $r_{out} = 1.44 \times 10^7\ \Omega$.

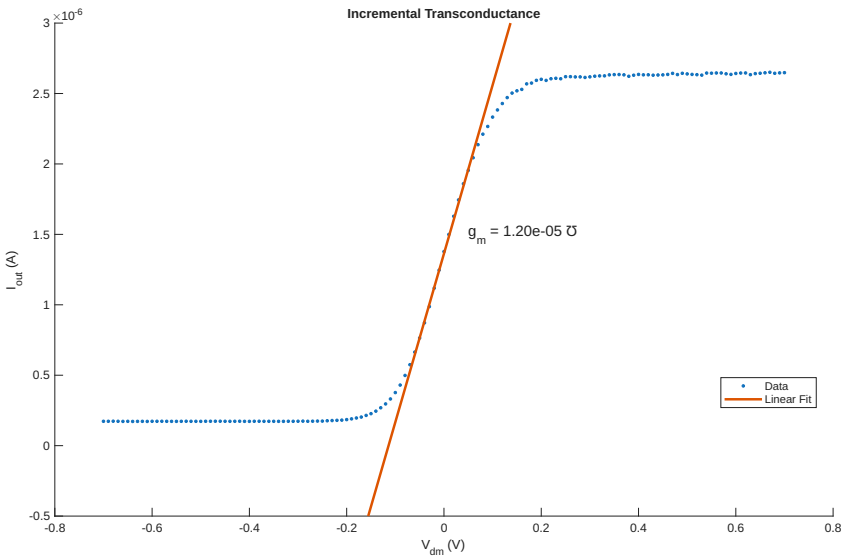

Figure 7. Incremental transconductance measurement showing the output current (I_{out}) versus the differential input voltage (V_{dm}) with a fixed output voltage. The linear fit gives a transconductance of $g_m = 1.20 \times 10^{-5}\ \Omega^{-1}$.

2.2. Analysis

From the linear fit of the VTC's high-gain region shown in Figure 5, the directly measured differential-mode voltage gain is $A_v = 181.70$ V/V. The incremental output resistance was extracted from the inverse slope of the I_{out} versus V_{out} characteristic curve (Figure 6) with $V_{dm} = 0$ V, give $r_{out} = 1.44 \times 10^7\ \Omega$. Finally, the incremental transconductance was determined from the slope of the I_{out} versus V_{dm} curve in Figure 7, resulting in $g_m = 1.20 \times 10^{-5}\ \Omega^{-1}$. Additionally, the measured limiting values of I_{out} were 46.3 μA in the positive direction and -54.5 μA in the negative direction.

2.3. Discussion

The theoretical differential-mode voltage gain can be calculated using the independently measured incremental transconductance and output resistance:

$$A_{v,calc} = g_m \times r_{out}$$

Substituting the extracted values gives:

$$A_{v,calc} = (1.20 \times 10^{-5}\ \Omega^{-1}) \times (1.44 \times 10^7\ \Omega) = 172.8 \text{ V/V}$$

Comparing this calculated gain to the directly measured gain of 181.70 V/V, we find a percent error of approximately 5.15%. The results show that the current-mirror provides a significantly higher gain than the simple differential amplifier from Lab 6 by maximizing the output resistance.

3. Unity-Gain Follower Step Response

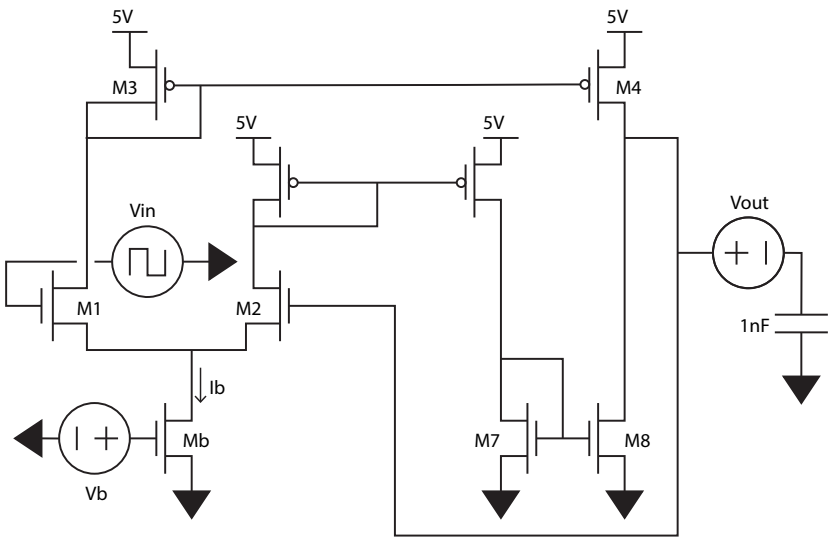

Figure 8. Schematic of the current-mirror differential amplifier used as a unity-gain follower (buffer) driving a 1 nF load capacitor.

In this experiment, we configured the circuit as shown above and inputted a 1 kHz square wave with a 1.5 VDC offset from GND and a 50 mV amplitude. This was our signal to simulate a small burst step response. For our larger step response, we inputted a 100 Hz square wave with a 1.5 VDC offset from GND and a 3V amplitude. The waveform was created using a waveform generator and the data was measured using an oscilloscope, both of which came from the Electronics Prototyping Room. Both waveforms have an offset of 1.5 VDC to make sure that the differential pair is always saturated. The frequencies selected allowed for a clear output signal and time for the circuit to reach the steady state (if not it looked like a triangle wave). We expect the output voltage to closely resemble the input voltage from this circuit as it is configured as a unity gain follower.

3.1. Results

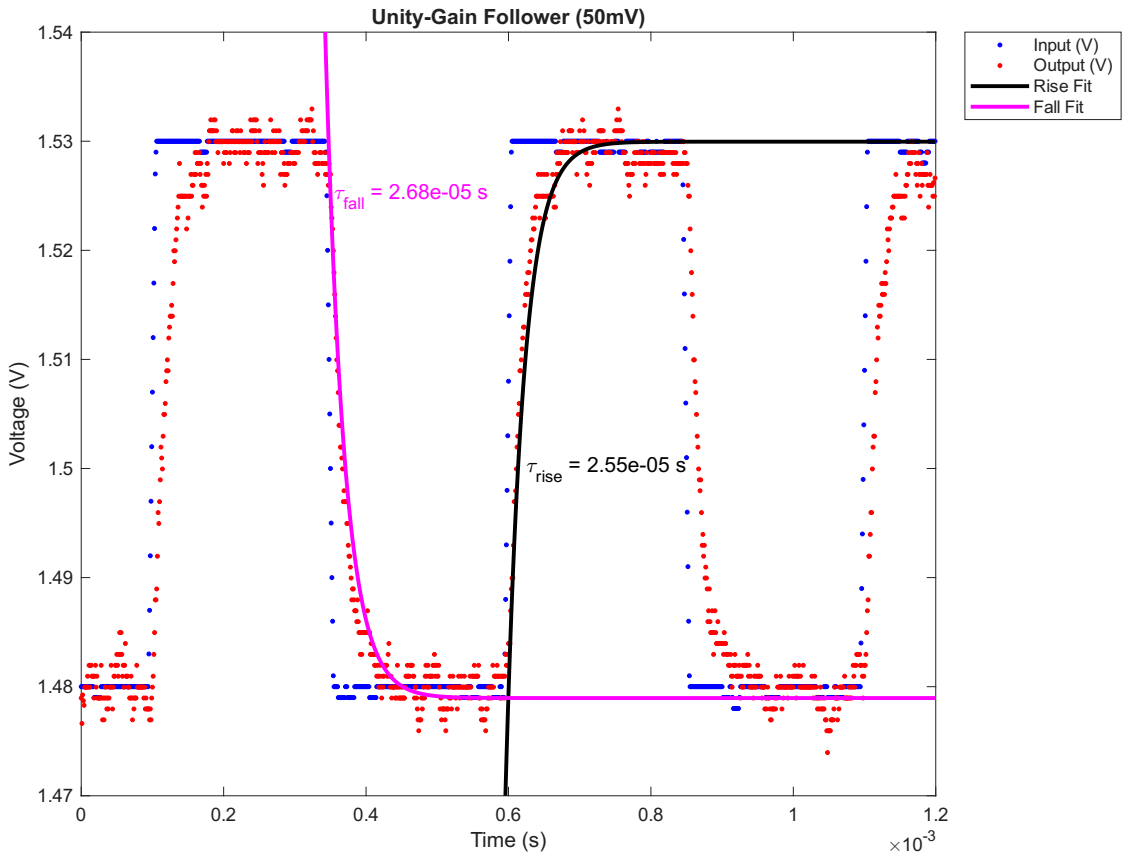

Figure 9. Small signal step response of the current-mirror differential amplifier as a unity-gain follower driving a 1 nF load capacitor. Extracted rise and fall time constants are shown.

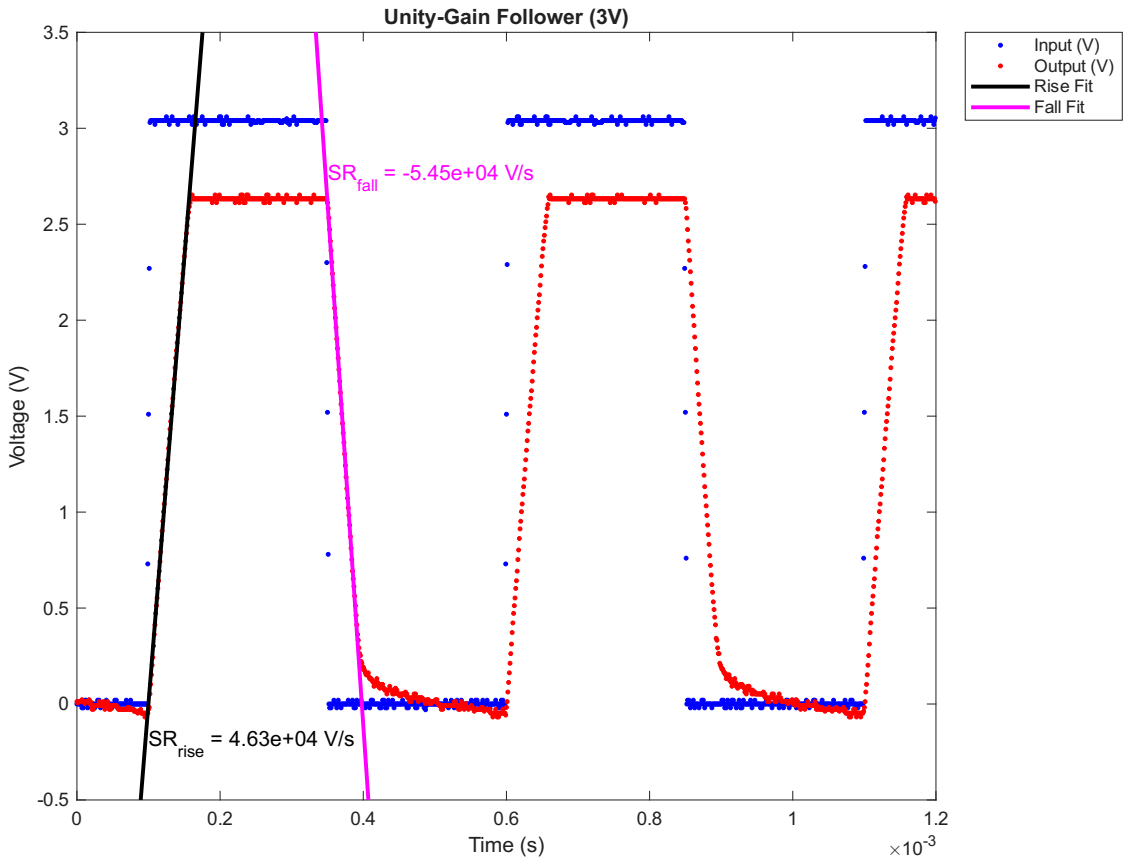

Figure 10. Large signal step response of the unity-gain follower configuration, showing linear slewing. The positive and negative slew rates (SR) are labeled.

3.2. Analysis

For the small-signal step response shown in Figure 9, the measured time constants are $\tau_{rise} = 2.55 \times 10^{-5}$ s and $\tau_{fall} = 2.68 \times 10^{-5}$ s. For a unity-gain follower, the expected time constant is $\tau = C_L/g_m$. Using $C_L = 1$ nF and $g_m = 1.20 \times 10^{-5}\ \Omega^{-1}$ from Experiment 2, the theoretical value is:

$$\tau_{calc} = \frac{1 \times 10^{-9}}{1.20 \times 10^{-5}} \approx 8.33 \times 10^{-5}\ \text{s}$$

For the large-signal response shown in Figure 10, the measured slew rates are $SR_{rise} = 4.63 \times 10^4$ V/s and $SR_{fall} = -5.45 \times 10^4$ V/s. To compare these with theoretical values, we use the formula $SR = I_{limit}/C_L$. Using the limiting currents measured in Experiment 2 ($I_{out+} = 46.3\ \mu$A and $I_{out-} = -54.5\ \mu$A) and $C_L = 1$ nF, the theoretical slew rates are $SR_{calc,+} = 4.63 \times 10^4$ V/s and $SR_{calc,-} = -5.45 \times 10^4$ V/s. The measured small-signal time constants are different from the theoretical value by about 69%.

3.3. Discussion

In the small-signal case, the amplifier behaves as a linear system with an exponential step response. The rise and fall time constants are similar, indicating approximately symmetric behavior. The measured time constants ($\sim$26 μs) are smaller than the theoretical value (83.3 μs). This difference likely comes from dynamic operating conditions, where the effective transconductance is different from from the DC value used in calculations. In the large-signal case, the output transitions become linear in time, indicating slew-rate limitation. This happens when the input step brings the differential pair into current steering saturation, limiting the current available to charge and discharge the load capacitor. The rise and fall slew rates are very similar in magnitude but not identical, showing slight asymmetry in the sourcing and sinking paths. Overall, the results agree with expected behavior.