MOS Transistor Characteristics and Simple MOS Current Mirrors

Elias Tuthill[1], **Henry Tejada Deras**[1] **and Anika Mahesh**[1]

[1]*Franklin W. Olin College of Engineering*

1. Input/Gate Characteristics

1.1. Results

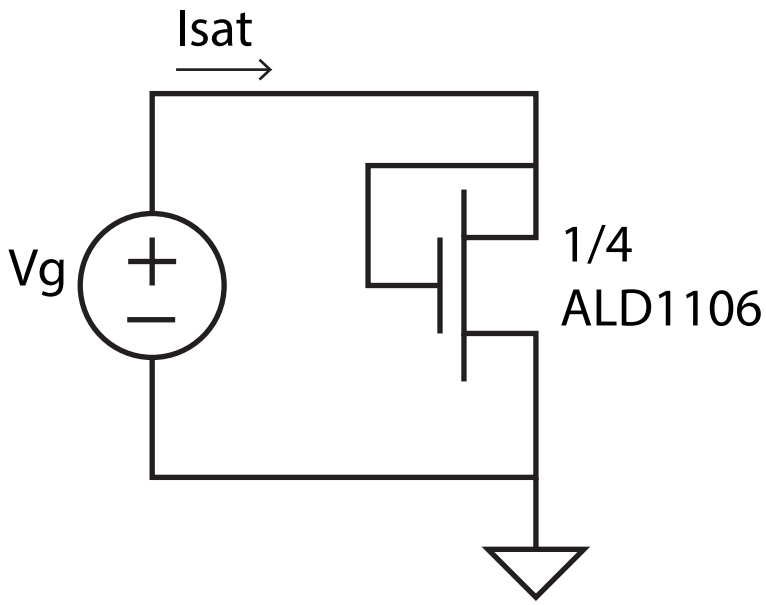

Figure 1. The schematic for the experimental setups used in Experiment 1. Each of the four ALD1106 transistors were used.

The circuit we made was a diode-connected nMOSFET. In this experiment, we measured the current-voltage characteristics of the MOSFET in this configuration.

MOSFET	I_s (A)	κ	V_{T0} (V)
1	1.6941×10^{-6}	0.7365	0.5905
2	1.6771×10^{-6}	0.7377	0.5877
3	1.6871×10^{-6}	0.7361	0.5900
4	1.6953×10^{-6}	0.7366	0.5885

Table 1. Extracted MOSFET parameters for the four devices under test.

Above is a summary of the four nMOSFETs that we tested that were all in the ALD1106 chip. We extracted the values using the EKV model. Overall, the values are very close to each other and match very well.

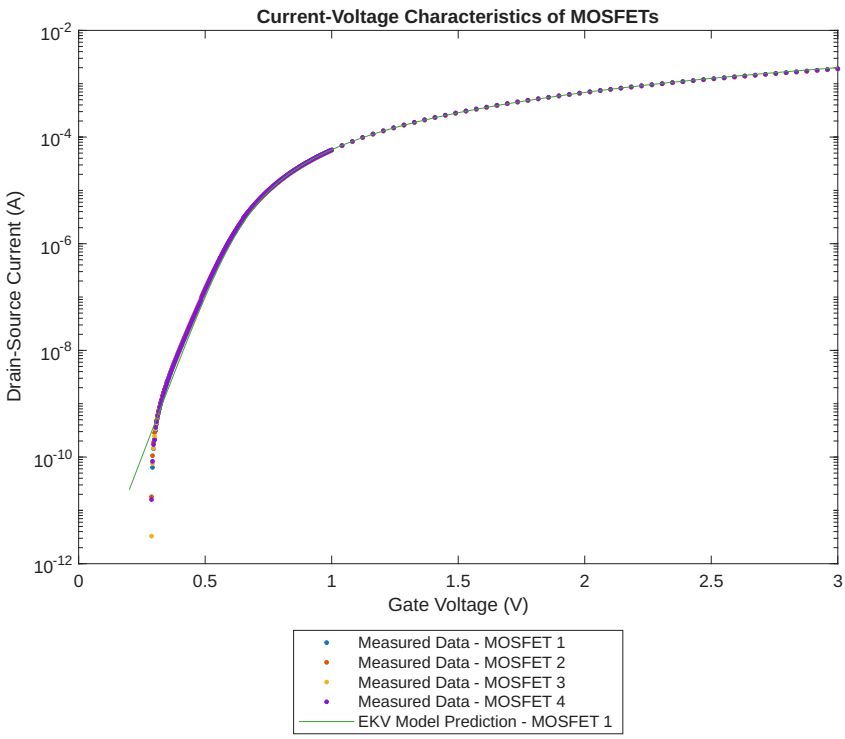

Figure 2. Current-Voltage characteristic of the nMOSFETs. Notice how the data indicates that all of them are almost identical to each other.

Above is the current-voltage characteristics of the nMOSFETs we obtained in the ALD1106 chip. The data indicates that all of the MOSFETs are very similar to each other. In addition, the EKV model prediction fits very well to the data.

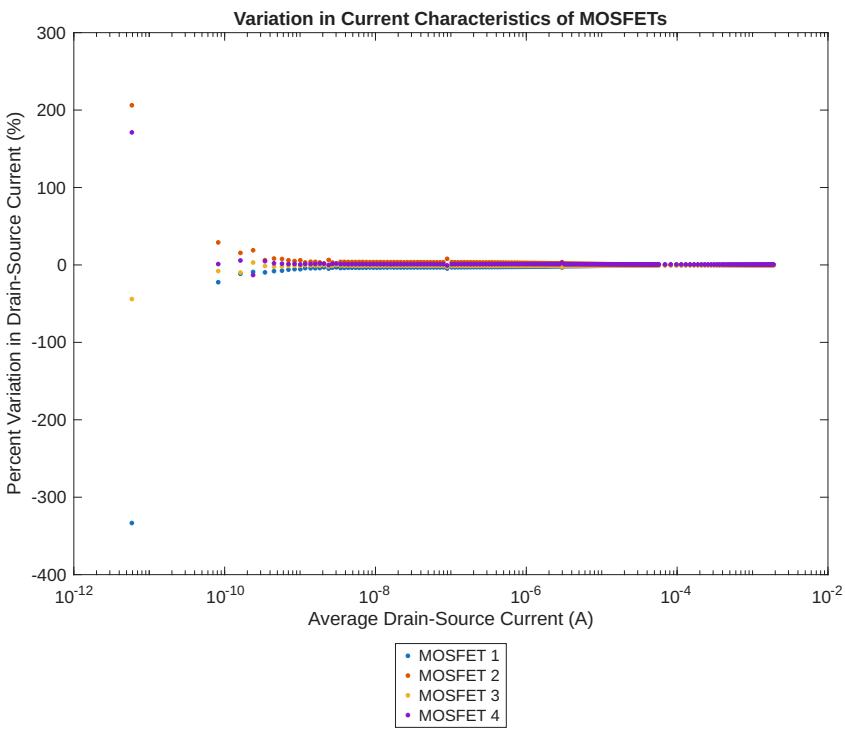

Figure 3. Variation in current characteristics across the 4 nMOSFETs in the ALD1106 chip. Notice how there is little variation at higher currents and large amounts of variation in lower currents.

Above is the variation in drain-source current in the nMOSFETs as a function of average drain-source current. There is more variation the lower the drain-source current is flowing through the nMOSFET.

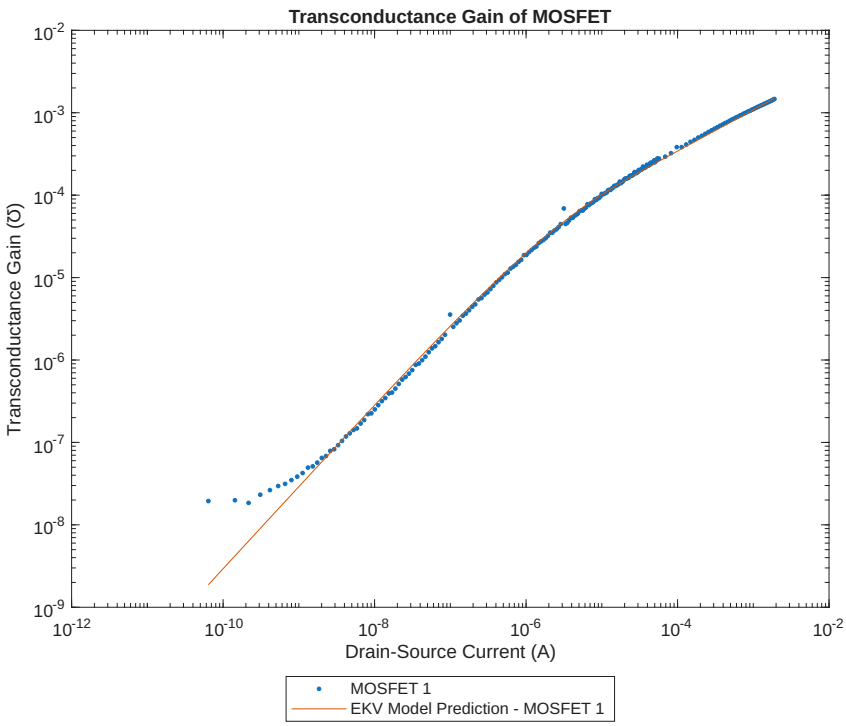

Figure 4. Transconductance Gain as a function of Drain-Source Current.

The nMOSFET transconductance gain as a function of drain-source current. The EKV model matches reality very well until the drain-source voltage drops below $1 \cdot 10^{-9}$ V.

1.2. Analysis

Overall, the current-voltage characteristics match very well to the EKV model except for very small gate voltages (as seen by the deviation between the data and the prediction by the EKV model near the bottom right of the plot in Figure 2). The variation in the Drain-Source currents between the respective MOSFETs are almost none at higher currents compared to lower currents as seen in Figure 3. As for the transconductance gain, at lower Drain-Source currents, the data deviates from the model a lot as seen in Figure 4.

Between the data comparing the transistors to each other (see Figure 2 and Figure 3), you can see that the transistors start to deviate from each other in lower currents and voltages and are pretty uniform with each other at higher currents and voltages. This is because at lower voltages, the transistors are at weak inversion and any slight variations affect the behavior of the MOSFET more in this region of inversion compared to stronger regions of inversion.

For the transconductance gain of the MOSFET, it generally matched the model until the Drain-Source currents started reaching the Nanoamp range. The theoretical fit predicted values above and below the measured data throughout the current range. We think that this may be the case due to the MOSFET not being in saturation in lower currents (and the EKV model was designed to predict in the saturation range).

1.3. Discussion

In general, the predictions made by the EKV model match the data at higher current and voltage levels. At higher voltage levels and current levels, the level of inversion is higher. In the case of the higher voltages, we are specifically referring to the Gate-Source voltage which largely determines the width of the channel; therefore the larger the Gate-Source voltage, the stronger the inversion and the better the model matches the data. The opposite is also true. In terms of current, at larger currents, the channel is larger and therefore there is more inversion happening and vice versa. This helps explain why the data at lower currents deviates from the model; lower currents mean that the inversion level is low and that means that the MOSFET is no longer in the saturation region, it is in the ohmic region. In summary, the higher the voltages and currents, the better the data matches the model prediction and vice versa.

2. Current Transfer Characteristics

2.1. Results

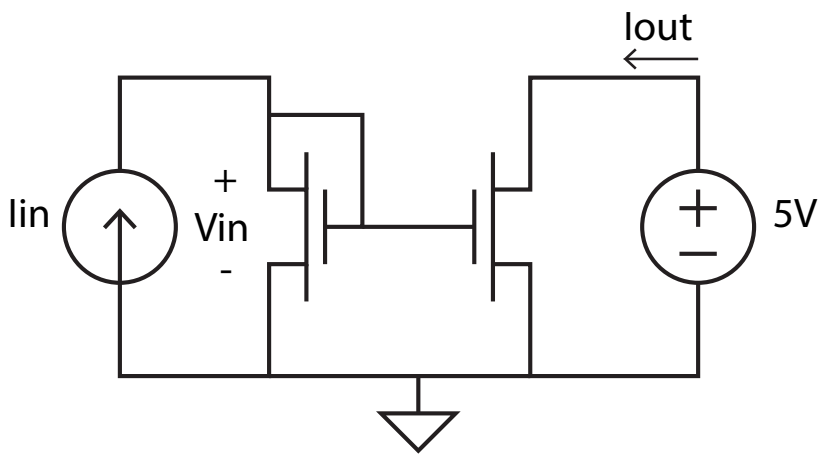

Figure 5. The schematic for the experimental setups used in Experiment 2. Two of four ALD1106 transistors were used.

Figure 6. The current transfer characteristic of the nMOS current mirror circuit in depicted in Figure 5 when the current source was varied from 1nA to 1mA and the corresponding theoretical fit where $I_{out} = I_{in}$

2.2. Analysis

The error of the current mirror circuit was calculated as $\frac{100}{1000} \sum \frac{|I_{out} - I_{in}|}{I_{in}}$. The error was found to be 11.219%. This error is likely due to the fact the current source is not ideal and there may have been some error in the measurement as well as some variation in the transistors used in the circuit due to manufacturing defects.

2.3. Discussion

The error is still relatively low and this circuit is able to approximate the behavior of an ideal current mirror. The behavior of the current mirror is consistent with the theoretical fit, especially for higher currents. The error is likely more significant at lower currents due to the fact that the current source may not be able to provide a stable current at such low levels and there may be more noise in the measurements. Overall, this circuit is a good approximation of an ideal current mirror and can be used in various applications where a stable current source is needed.

3. Output/Drain Characteristics

3.1. Results

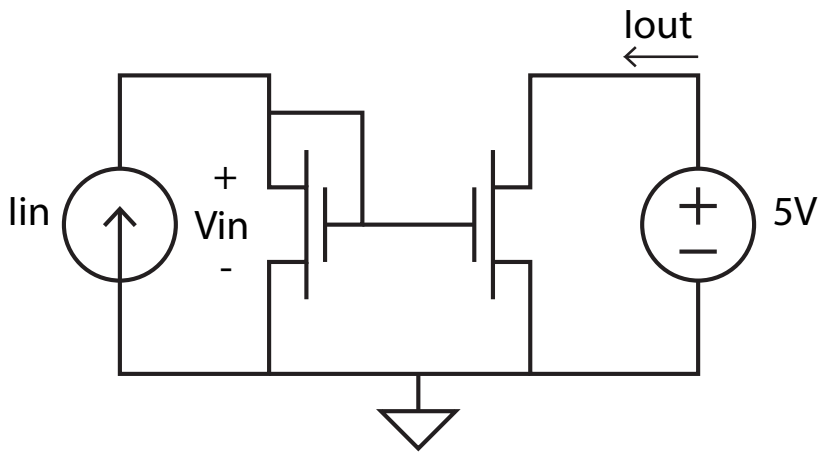

Figure 7. The schematic for the experimental setups used in Experiment 3. Two of four ALD1106 transistors were used.

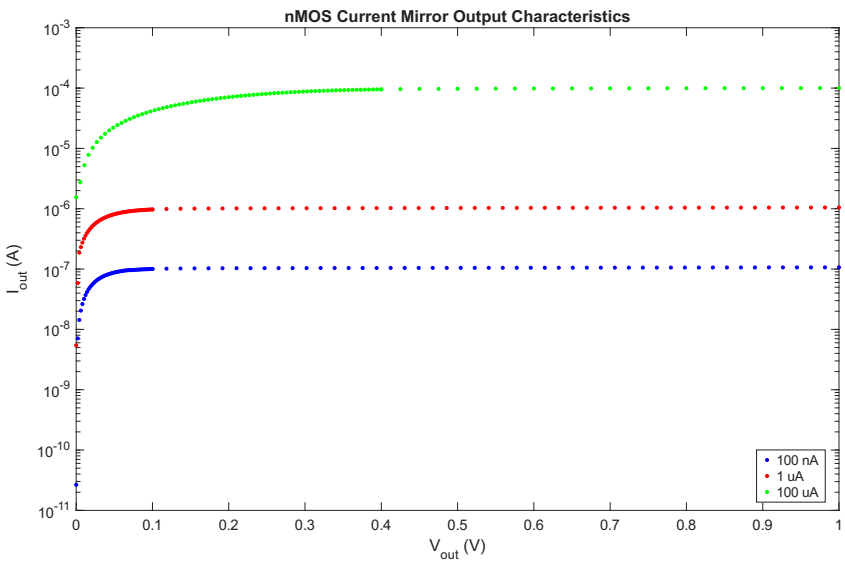

Figure 8. Semilog plot of the nMOS current mirror output characteristics (I_{out} vs. V_{out}) for input currents of 100 nA, 1 μA, and 100 μ.

I_{in} (A)	r_{on} (Ω)	r_{o} (Ω)	V_{A} (V)	Gain
1×10^{-7}	3.653×10^{5}	3.208×10^{8}	32.081	878.3
1×10^{-6}	4.069×10^{4}	3.002×10^{7}	30.019	737.8
1×10^{-4}	2.532×10^{3}	2.683×10^{5}	26.829	106.0

Table 2. Extracted nMOS current mirror parameters for different input currents using corrected region selection and absolute current fitting.

3.2. Analysis

From the measured output characteristics, we got the on-resistance (r_{on}) from the slope of the output current in the deep ohmic region and the output resistance (r_{o}) from the slope in the saturated region. The Early voltage (V_{A}) was calculated as $V_{\text{A}} = r_{\text{o}} I_{\text{in}}$, and the intrinsic gain was calculated as Gain $= r_{\text{o}}/r_{\text{on}}$.

As expected, the on-resistance decreases with increasing input current. This reflects the transition from weak inversion (high r_{on}) to strong inversion (low r_{on}). The output resistance also decreases with increasing current due to stronger channel-length modulation effects at higher currents. The Early voltage shows a similar trend, slightly decreasing with increasing input current. The intrinsic gain is highest in weak inversion, slightly lower in moderate inversion, and drops significantly in strong inversion.

3.3. Discussion

The assumption that the intrinsic gain of the transistor is much greater than unity is generally valid in weak and moderate inversion, where gains are 878 and 738, respectively. In strong inversion, the gain drops to approximately 106, which is still larger than unity but significantly lower, indicating that some approximations based on very large gain might be less accurate.

Overall, the measurements confirm that the transistor behaves nearly ideally in weak and moderate inversion, with relatively flat saturation characteristics and high intrinsic gain. The strong inversion regime shows more pronounced channel-length modulation, reflected in the lower gain and Early voltage. These results are consistent with the expected trends for MOSFET current mirrors.