The MOS Differential Pair

Henry Tejada Deras[1], **Anika Mahesh**[1] **and Elias Tuthill**[1]

[1]*Franklin W. Olin College of Engineering*

1. Differential Pair Current–Voltage Characteristics

In this experiment, we set up the circuit in three different ways to measure I_{out1}, I_{out2}, and V (common-source node voltage) values of the differential pair circuit. This arrangement was selected due to limitations with the equipment that we were using to take the data, the SMU has only two channels to get data from and we needed to get data from 3 places which needs 4 channels to take all of the data at once. For this experiment, we used one channel to vary the differential mode voltage into the circuit and used the other channel to measure the other three values one at a time. Afterwards, we changed the reference voltage for V_2 and reran all of the measurements. We used 3 reference voltages for V_2 which were 2.5 V, 3.5 V, and 4.5 V. After that, we changed the bias voltage for the circuit from 0.6 V to 1.5 V to take all of the measurements in strong inversion instead of weak inversion. Below are the circuit diagrams for the three different measuring setups we used to measure I_{out1}, I_{out2}, and V.

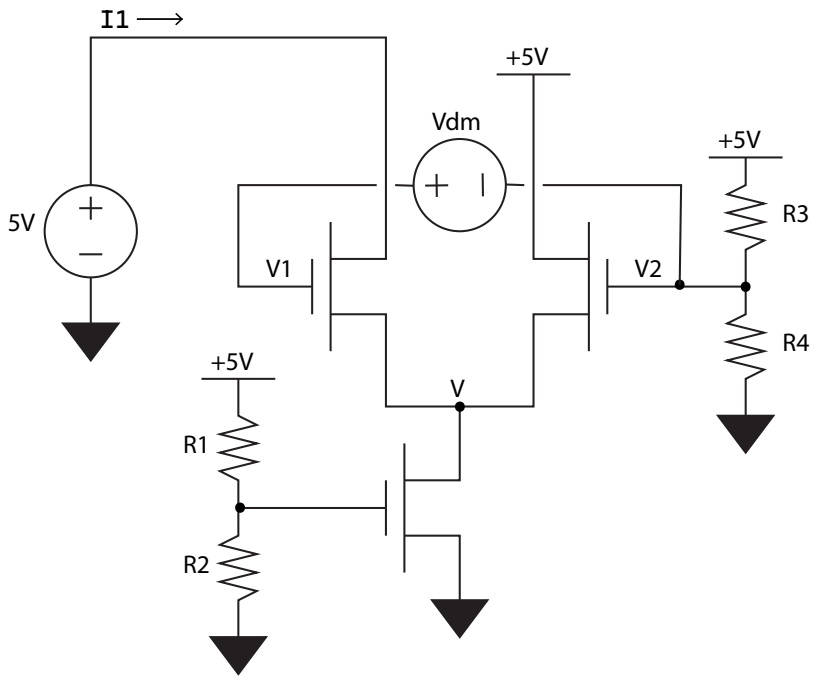

Figure 1. Experimental setup for Experiment 1, set up to measure I_{out1}.

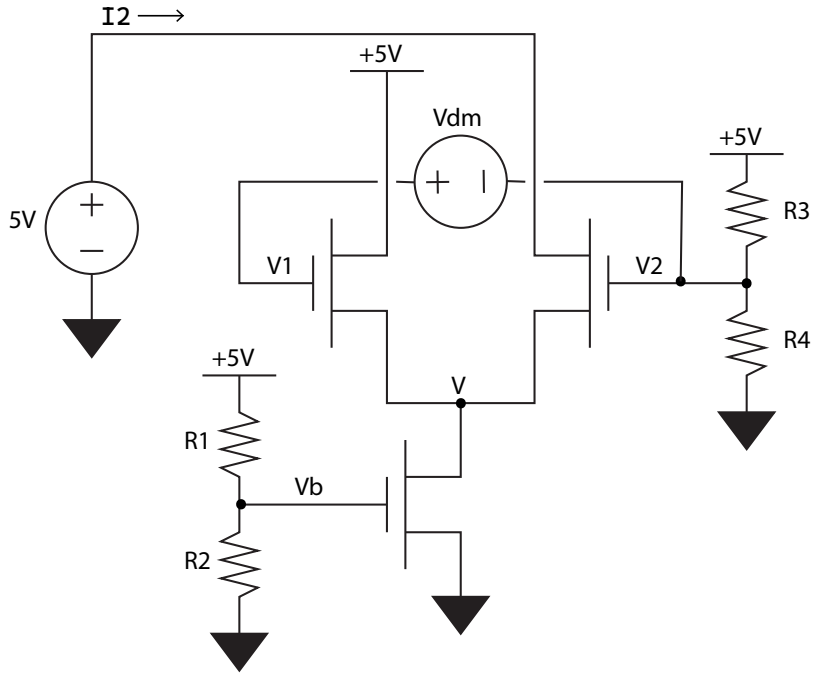

Figure 2. Experimental setup for Experiment 1, set up to measure I_{out2}.

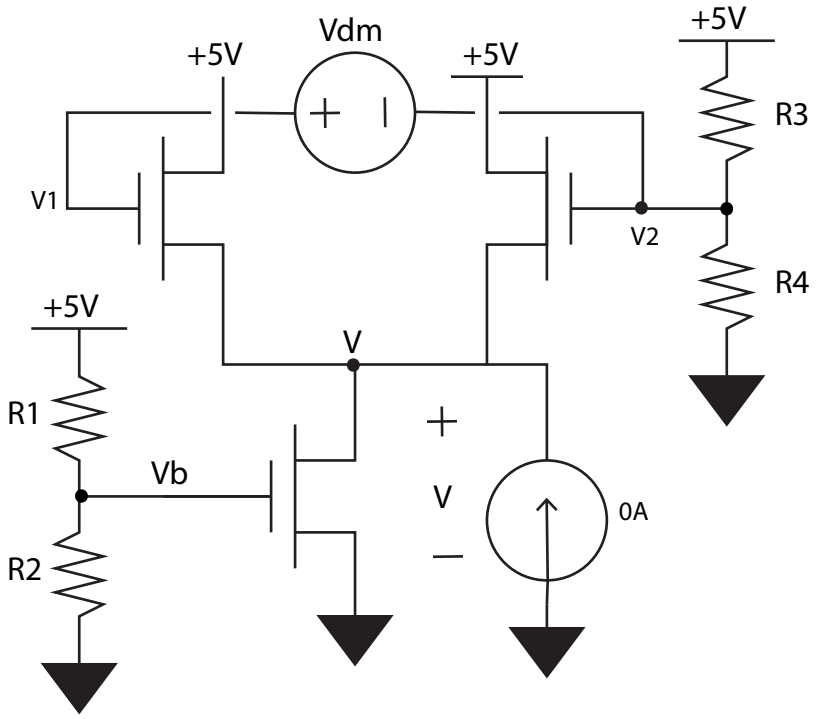

Figure 3. Experimental setup for Experiment 1, set up to measure V.

1.1. Results

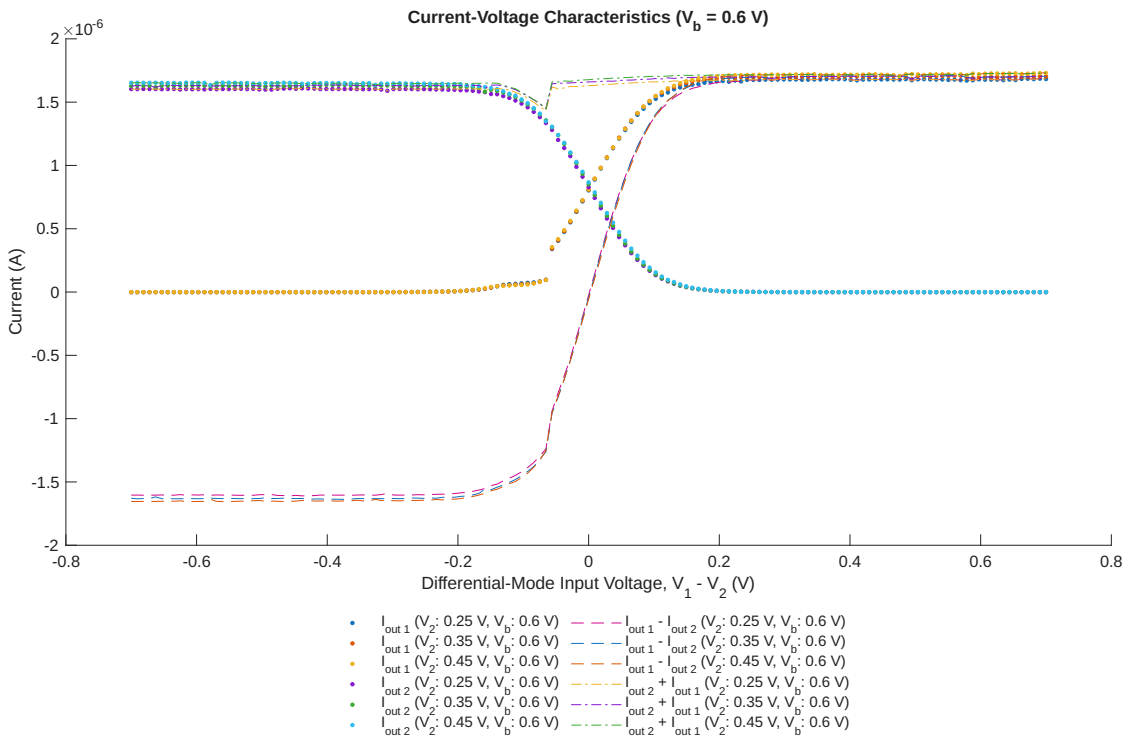

Figure 4. Drain currents I_1, I_2, differential current $I_1 - I_2$, and tail current $I_1 + I_2$ vs. differential input $V_1 - V_2$ for $V_b = 0.6$ V.

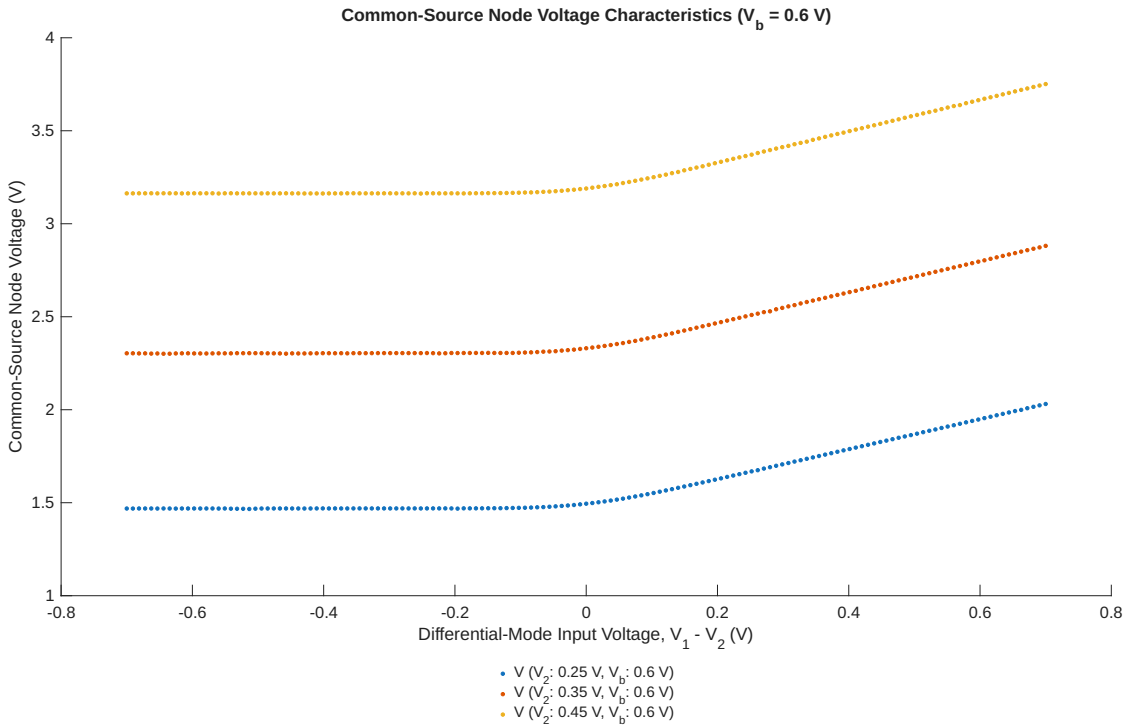

Figure 5. Common-source node voltage V vs. V_1 for varying V_2 at $V_b = 0.6$ V, illustrating the tracking behavior of the source node.

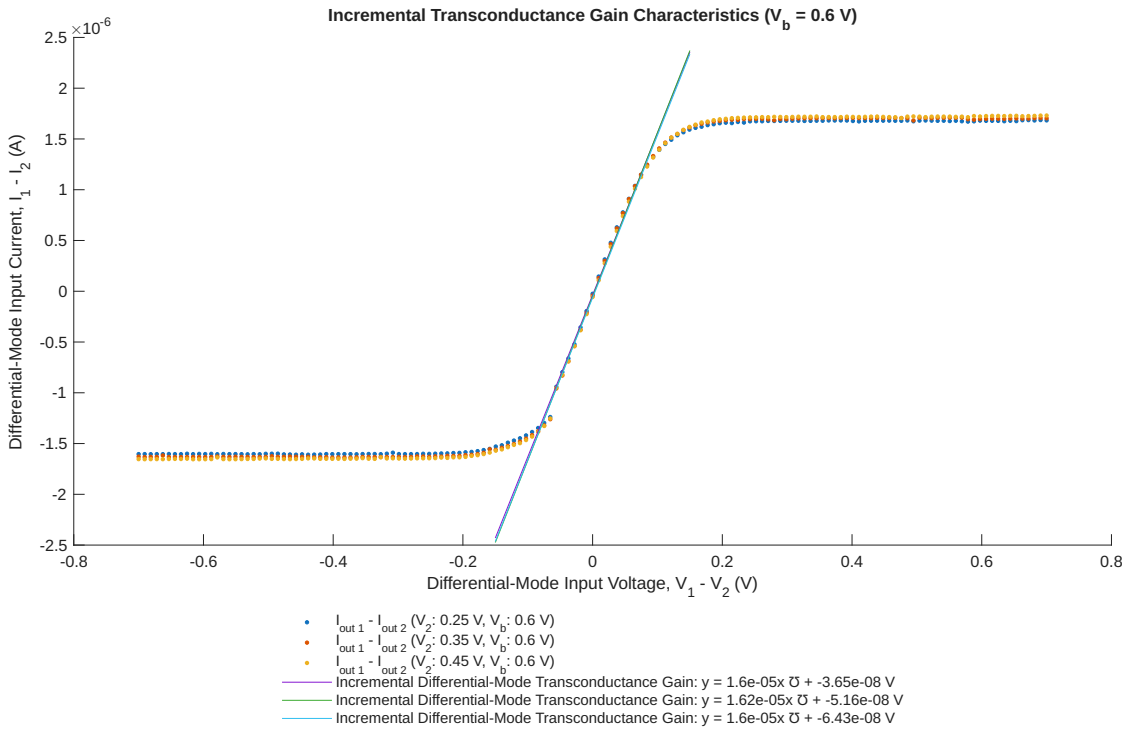

Figure 6. Extraction of the incremental transconductance gain G_{dm} via linear regression of the $I_1 - I_2$ curve near the origin.

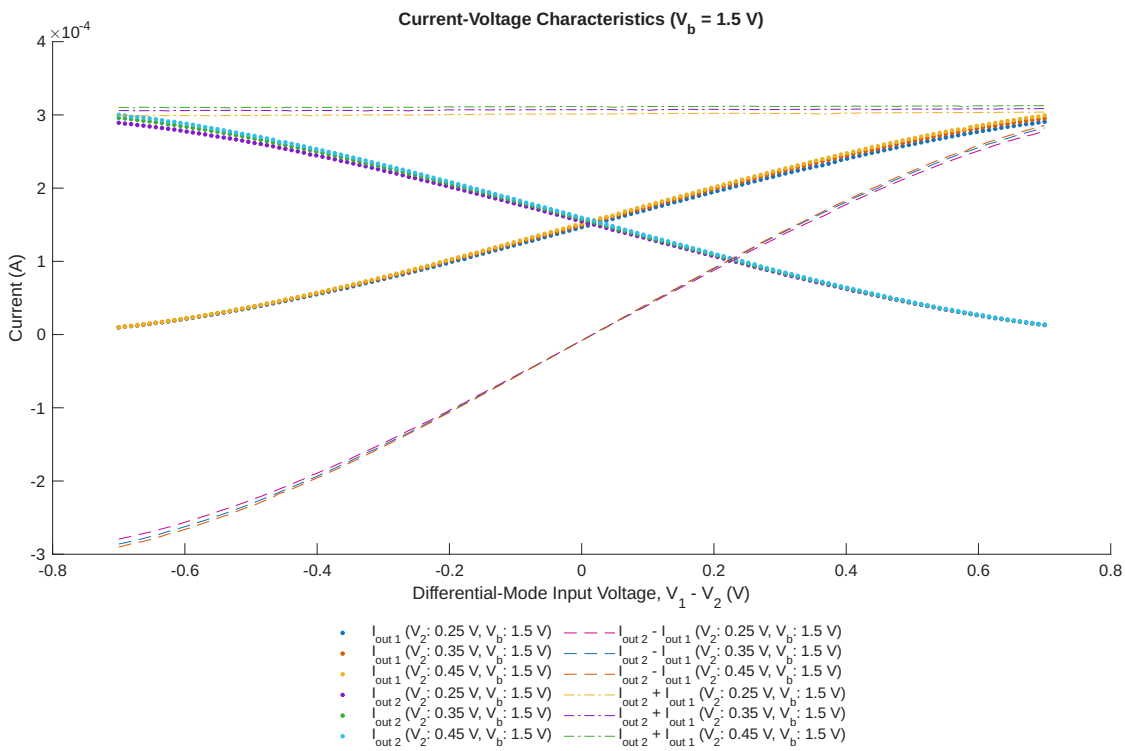

Figure 7. Current-voltage characteristics for the nMOS differential pair in strong inversion ($V_b = 1.5$ V).

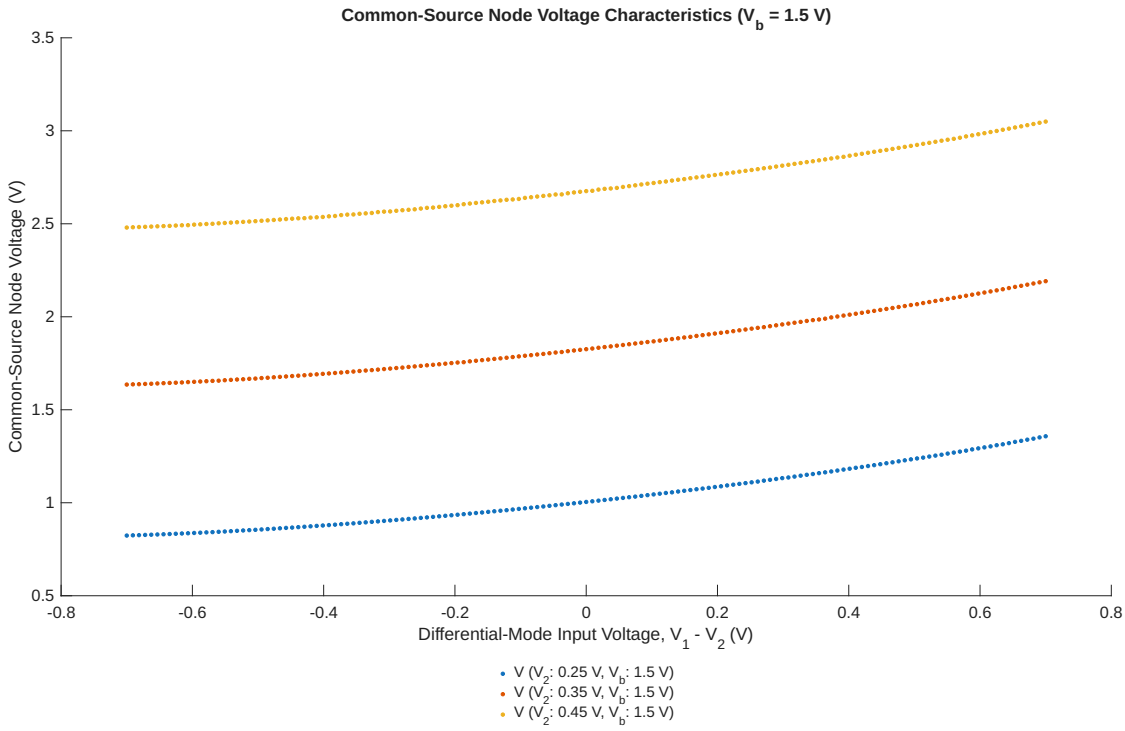

Figure 8. Common-source node voltage V vs. V_1 for varying V_2 at $V_b = 1.5$ V.

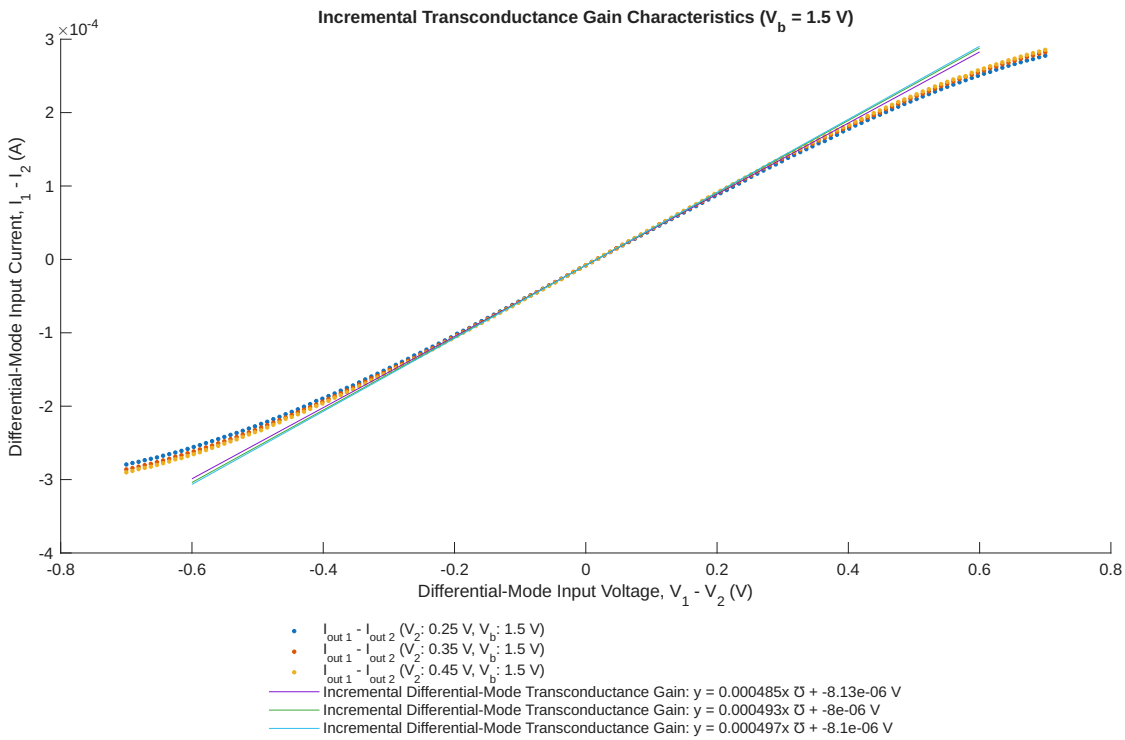

Figure 9. Incremental transconductance gain for the differential pair in strong inversion.

1.2. Analysis

The nMOS differential pair was characterized for two bias conditions: near threshold ($V_b = 0.6$ V) and above threshold ($V_b = 1.5$ V). At $V_b = 0.6$ V (Figure 4), the currents I_1 and I_2 depend primarily on the differential input $V_1 - V_2$. The curves for different V_2 values overlap closely, indicating a high common-mode rejection. The total current $I_1 + I_2$ remains approximately constant at 1.65 μA, consistent with a stable tail current. The common-source node voltage V (Figure 5) remains roughly constant when $V_1 < V_2$ (following the constant V_2) and increases linearly with V_1 once $V_1 > V_2$, as the source node tracks the gate of the active transistor to maintain a constant V_{gs}. The differential-mode transconductance was extracted from the slope of $I_1 - I_2$ near $V_1 = V_2$:

$$G_{dm} = \left.\frac{\partial(I_1 - I_2)}{\partial(V_1 - V_2)}\right|_{V_1=V_2}$$

For $V_b = 0.6$ V, $G_{dm} \approx 16\,\mu\mho$. As shown by the nearly identical slopes in Figure 6, this value of differential-mode transconductance gain does not change significantly as V_2 changes. At $V_b = 1.5$ V (Figure 7), the tail current increases to approximately 307 μA, resulting in a significantly higher G_{dm} of about 0.49 m$\mho$ and a wider linear input range.

1.3. Discussion

The results confirm that the differential pair responds mostly to $V_1 - V_2$, with little dependence on common-mode voltage. This is supported by the overlap of $I_1 - I_2$ curves across different V_2 values and the nearly constant $I_1 + I_2$. Small changes in $I_1 + I_2$ at large input differences likely occur when the bias transistor leaves saturation or the input devices enter the ohmic region. Increasing V_b from near-threshold to strong inversion increases both the tail current and G_{dm}, while also expanding the linear range. However, this comes at the cost of higher power consumption and reduced allowable common-mode range due to larger required V_{gs}.