# A Current-Mirror Differential Amplifier

**Henry Tejada Deras**[1] **and Elias Tuthill**[1]

[1] *Franklin W. Olin College of Engineering*

## 1. Voltage Transfer Characteristics

### 1.1. Results

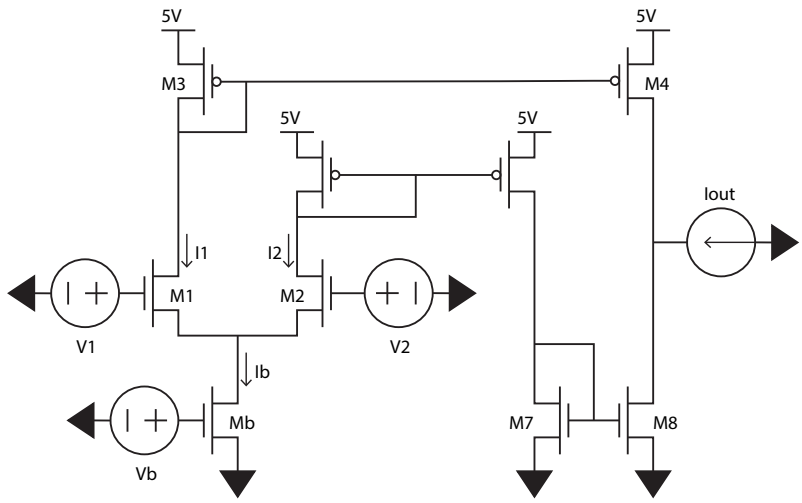


**Figure 1.** Schematic of the current-mirror differential amplifier used for Voltage Transfer Characteristic (VTC) measurements.

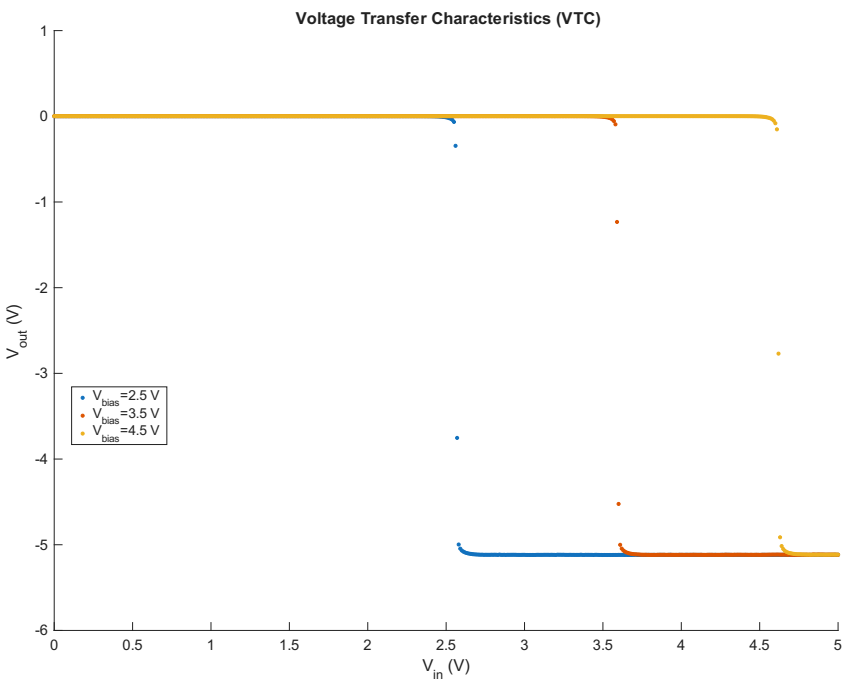


**Figure 2.** Voltage Transfer Characteristics (VTC) of the current-mirror differential amplifier. The plot shows the output voltage ($V_{out}$) versus the input voltage ($V_{in}$) for three different inverting input bias voltages: $V_{bias}$ = 2.5 V, 3.5 V, and 4.5 V.

### 1.2. Analysis

### 1.3. Discussion

## 2. Transconductance, Output Resistance, and Gain

### 2.1. Results

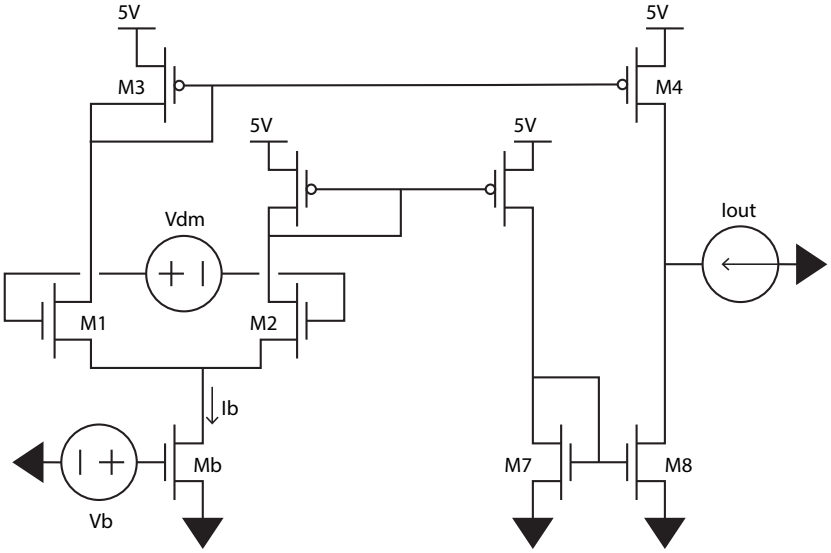


**Figure 3.** Schematic for differential-mode voltage gain measurement.

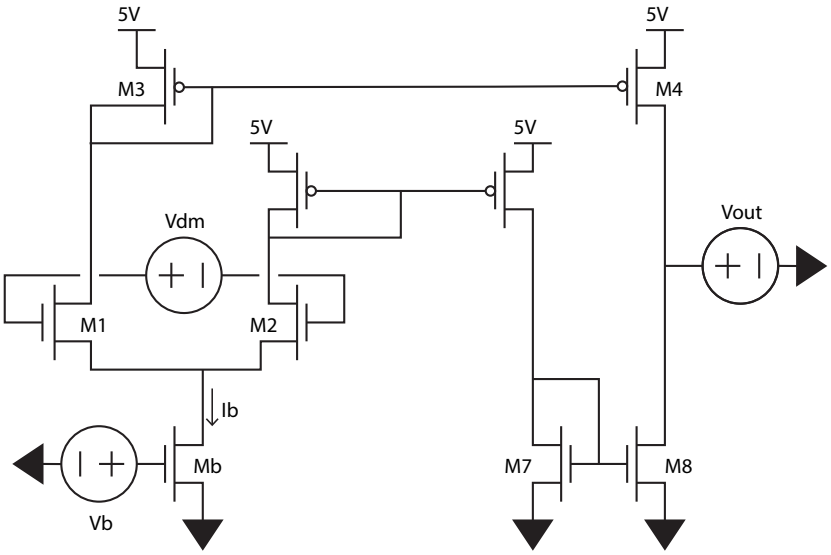


**Figure 4.** Schematic used for both incremental transconductance ($g_m$) and output resistance ($r_{out}$) measurements.

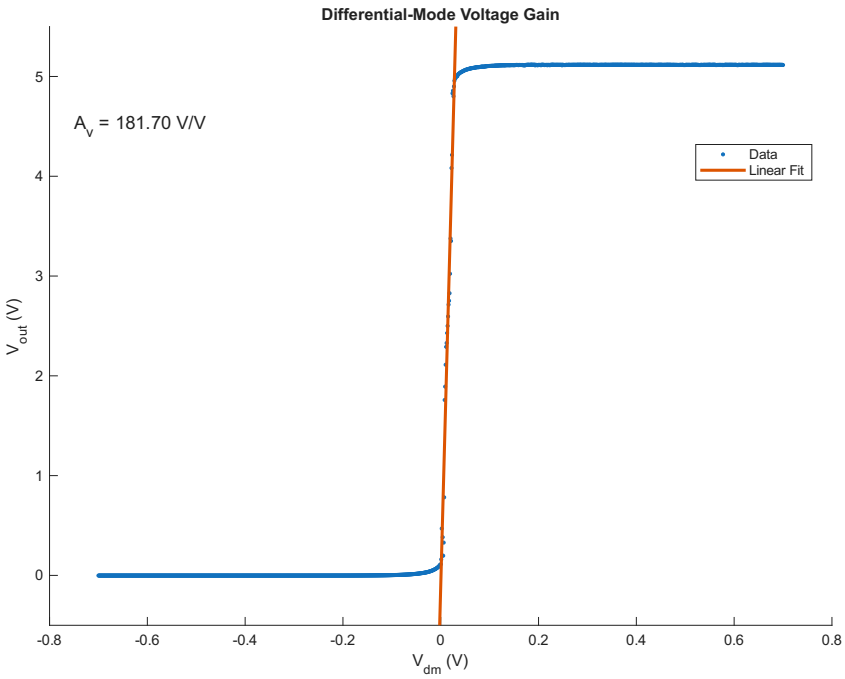


**Figure 5.** Differential-mode voltage gain measurement showing the output voltage ($V_{out}$) versus the differential input voltage ($V_{dm}$). A linear fit to the high-gain region gives a voltage gain of $A_v = 181.70$ V/V.

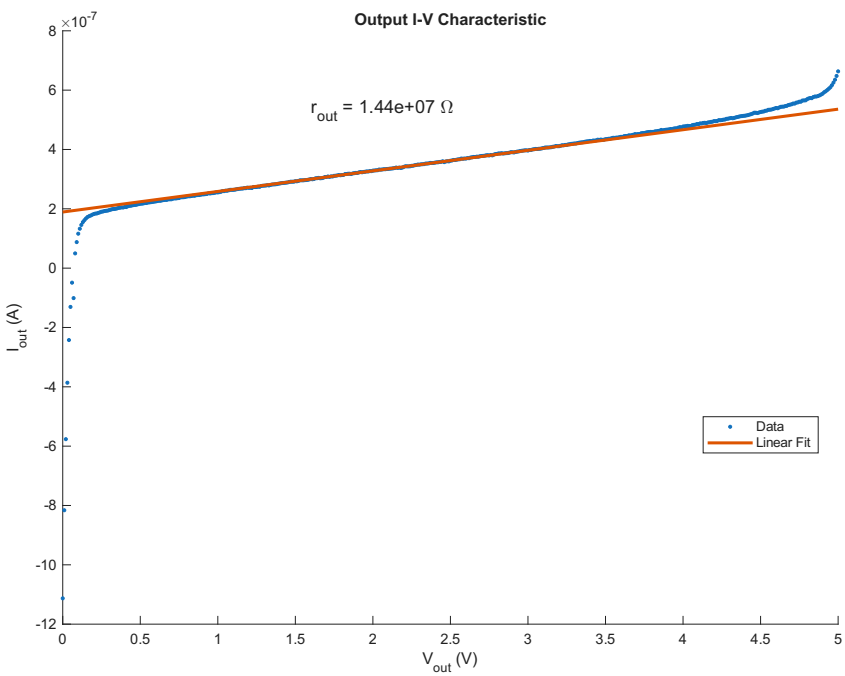


**Figure 6.** Output current-voltage characteristic curve showing $I_{out}$ versus $V_{out}$ with $V_{dm} = 0$ V. The inverse slope of the linear fit gives an incremental output resistance of $r_{out} = 1.44 \times 10^7\ \Omega$.

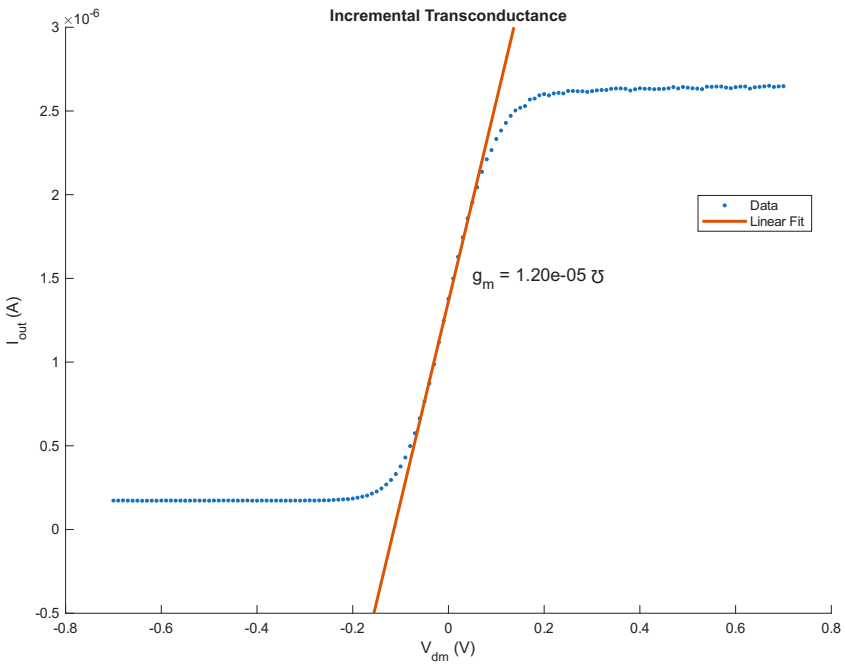


**Figure 7.** Incremental transconductance measurement showing the output current ($I_{out}$) versus the differential input voltage ($V_{dm}$) with a fixed output voltage. The linear fit gives a transconductance of $g_m = 1.20 \times 10^{-5}\ \Omega^{-1}$.

### 2.2. Analysis

### 2.3. Discussion

## 3. Unity-Gain Follower Step Response

### 3.1. Results

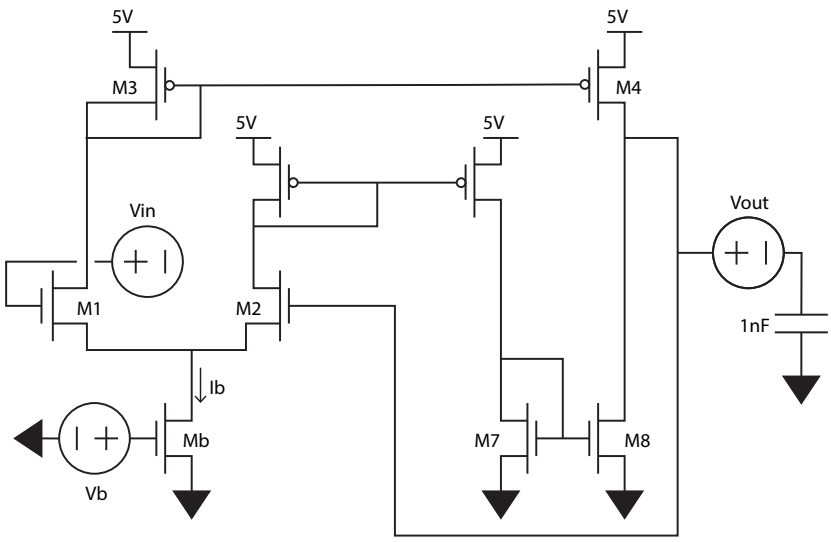


**Figure 8.** Schematic of the current-mirror differential amplifier used as a unity-gain follower (buffer) driving a 1 nF load capacitor.

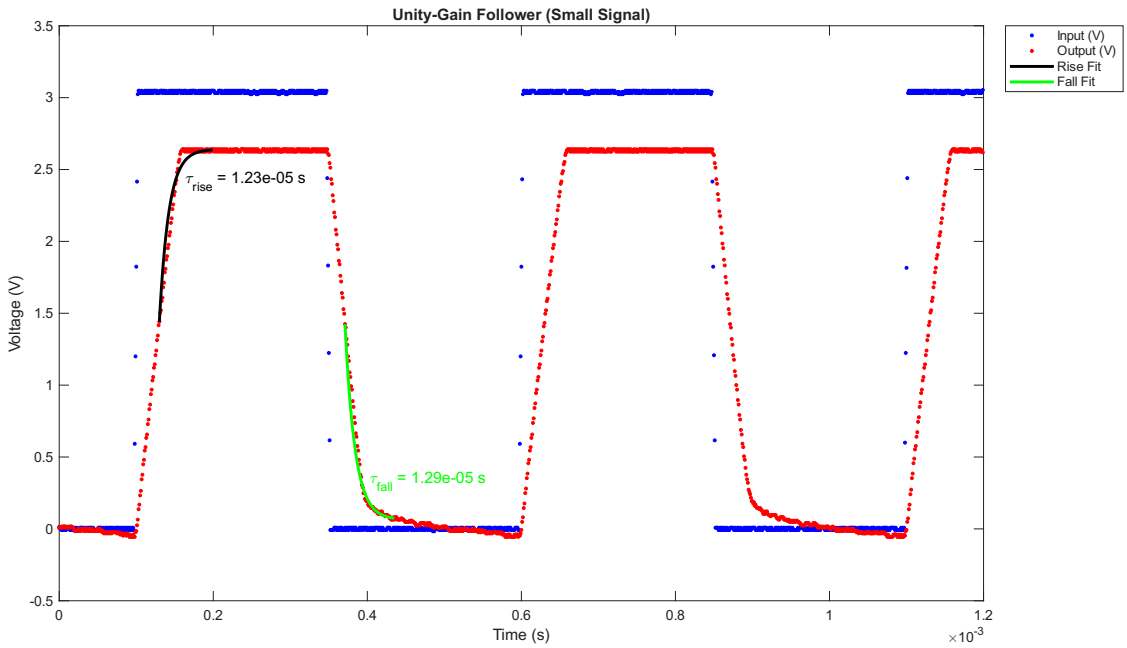


**Figure 9.** Small signal step response of the current-mirror differential amplifier as a unity-gain follower driving a 1 nF load capacitor. Extracted rise and fall time constants are shown.

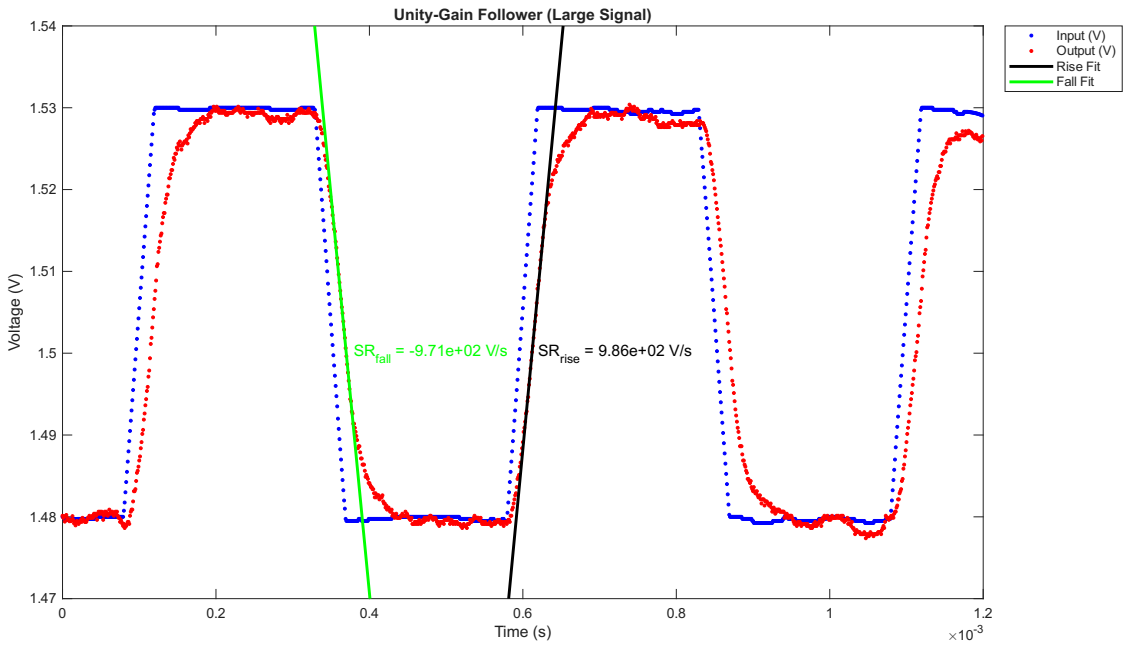


**Figure 10.** Large signal step response of the unity-gain follower configuration, showing linear slewing. The positive and negative slew rates (SR) are labeled.

### 3.2. Analysis

### 3.3. Discussion